SOUTHCENTRAL FOUNDATION

CHILDREN'S DENTAL CLINIC BUILDING

4441 DIPLOMACY DRIVE | ANCHORAGE, ALASKA 99508

Record Drawings - PARKING STRUCTURE ONLY

OWNER
SOUTHCENTRAL FOUNDATION
4501 DIPLOMACY DR.
ANCHORAGE, ALASKA 99508
PH: (907) 729-4928 FX: (907) 729-5000

DESIGN BUILDER
NEESER CONSTRUCTION
2501 BLUEBERRY
ANCHORAGE, ALASKA 99503
PH: (907) 276-1058 FX: (907) 563-0023

ARCHITECT
KUMIN
808 E STREET, SUITE 200
ANCHORAGE, ALASKA 99501
PH: (907) 272-8833 FX: (907) 272-7733

CIVIL
EBSC ENGINEERING, LLC
11301 OLIVE LANE
ANCHORAGE, ALASKA 99515
PH: (907) 222-1085

LANDSCAPE ARCHITECT
EARTHSCAPE
729 N STREET
ANCHORAGE, ALASKA 99501
PH: (907) 279-2688

STRUCTURAL
REID MIDDLETON
4300 B STREET, SUITE 302
ANCHORAGE, ALASKA 99508
PH: (907) 562-3439 FX: (907) 561-5319

MECHANICAL & ELECTRICAL
AMC ENGINEERS
701 E TUDOR ROAD, SUITE 250
ANCHORAGE, ALASKA 99503
PH: (907) 257-9100 FX: (907) 257-9191

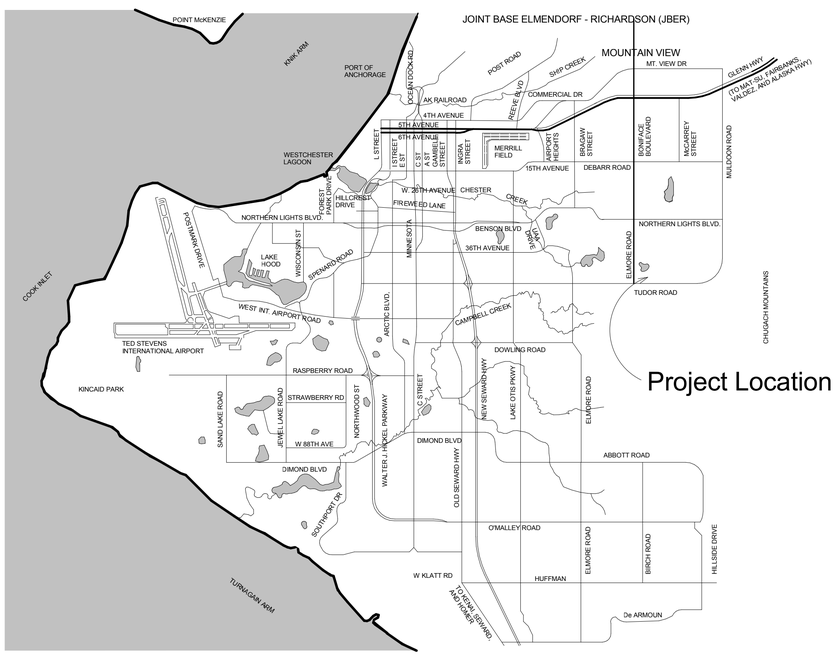

ANCHORAGE VICINITY MAP
SCALE : NOT TO SCALE

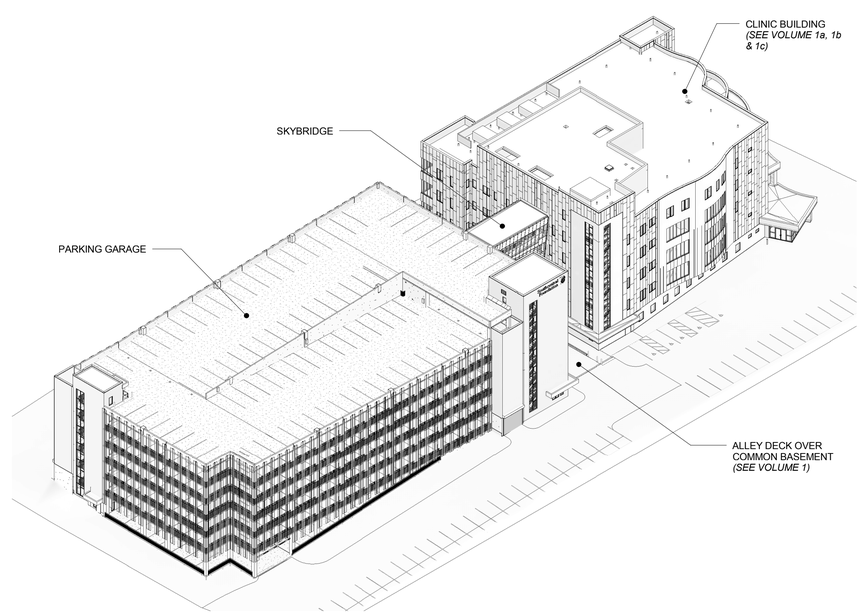

GENERAL VOLUME 2 NOTE

1. FOR CONNECTION BETWEEN PARKING STRUCTURE BASEMENT (LEVEL P0) AND CLINIC BUILDING BASEMENT (BSMT), SEE CIVIL SHEET CP100 IN SEPARATE VOLUME 1a

VOLUME 2

AS BUILT DRAWING
THIS DRAWING HAS BEEN PREPARED FROM CONTRACTOR FURNISHED INFORMATION. KUMIN ASSOCIATES, INC. MAKES NO WARRANTY, EXPRESSED OR IMPLIED, WITH REGARD TO THE ACCURACY OR COMPLETENESS OF THE INFORMATION NOW RECORDED IN THIS DRAWING. KUMIN ASSOCIATES, INC. WILL NOT ASSUME ANY LIABILITY, PROFESSIONAL OBLIGATION OR RISK THAT MIGHT OCCUR DUE TO THE RE-USE OF THIS INFORMATION.

KUMIN
ARCHITECTURE INTERIORS PLANNING
808 E STREET, SUITE 200
ANCHORAGE, AK 99501
907.272.8833 FAX 907.272.7733
CA LICENSE: AC-2501

NEESER CONSTRUCTION, INC.

Childrens Dental Clinic Building
4441 Diplomacy Drive, Anchorage AK 99508
Southcentral Foundation

No.	Description	Date

Drawn By: SS
Checked By: JS
Date: 24 DEC 2018
Phase: RECORD DRAWINGS
Job No: 21519.00
SHEET TITLE: Title Sheet

SHEET NO:
GP100

1/4/2019 2:23:31 AM

DRAWING INDEX - PARKING STRUCTURE

SHEET NUMBER	SHEET NAME
Volume 2	
01 GENERAL	
GP100	Title Sheet
GP101	Sheet Index
04 ARCHITECTURAL	
AP003	Code Plans, Code Notes
AP004	Code Plans
AP005	Code Plans
AP006	Code Plans
AP030	Wall Types
AP031	Horizontal Assembly Types
AP035	Fire Protection Plans
AP110	Floor Plan - Level P0
AP111	Floor Plan - Level P1
AP112	Floor Plan - Level P2
AP113	Floor Plan - Level P3
AP114	Floor Plan - Level P4
AP115	Floor Plan - Level P5
AP116	Floor Plan - Level P6
AP117	Floor Plan - Level P7
AP120	Floor Plans - Skybridge
AP121	Compactor Enclosure, Skybridge & Stair Roof Plans
AP150	RCP - Level P0
AP151	RCP - Level P1
AP152	RCP - Level P2
AP153	RCP - Level P3
AP154	RCP - Level P4
AP155	RCP - Level P5
AP156	RCP - Level P6
AP157	RCP - Level P7 (Partial), Skybridge
AP201	Exterior Elevations
AP202	Exterior Elevations
AP203	Exterior Elevations - Glass Cladding
AP204	Exterior Elevations - Glass Cladding
AP205	Exterior Elevations - Glass Cladding
AP220	Exterior Elevations - Skybridge
AP301	Building Sections
AP302	Building Sections
AP303	Building Sections
AP304	Building Sections
AP305	Building Sections
AP306	Building Sections
AP307	Skybridge Sections
AP401	Pkng - Stair SP1 & Elevator EP1 - Enlarged Plans
AP402	Pkng - Stair SP1 & Elevator EP1 - Enlarged Plans
AP403	Pkng - Stair SP1 & Elevator EP1 - Sections
AP404	Pkng - Stair SP1 - Enlarged Sections/Elevations
AP405	Pkng - Stair SP1 - Enlarged Sections/Elevations
AP406	Pkng - Stair SP1 Details
AP407	Pkng - Stair SP2 - Enlarged Plans
AP408	Pkng - Stair SP2 - Enlarged Plan & Sections
AP409	Pkng - Stair SP2 - Enlarged Sections/Elevations
AP410	Pkng - Stair SP2 Details
AP411	Pkng - Stair SP2 Details
AP412	Pkng - Typ Stair Details
AP413	Skybridge - Stair and Ramp Detail
AP414	Skybridge - Stair and Ramp Detail
AP415	Enlarged Plans - Bike Cage, Skybridge Lift
AP450	Interior Elevations
AP451	Interior Elevations
AP452	Interior Elevations
AP501	Exterior Details
AP502	Exterior Details
AP503	Exterior Details
AP504	Exterior Details
AP520	Exterior Roof Details
AP521	Exterior Roof Details
AP530	Seismic Joint Details
AP531	Seismic & Skybridge to PG Details
AP532	Exterior Opening Details
AP533	Exterior Opening Details
AP534	Exterior Opening Details
AP535	Exterior Opening Details
AP536	Exterior Opening Details
AP540	Exterior Railing Details
AP550	Interior Details
AP601	Finish Schedule
AP650	Door Schedule
AP651	Door, Frame & Window Types
AP652	Window Types
AP700	Striping & Signage General Notes, Sign Details
AP701	Striping Details

DRAWING INDEX - PARKING STRUCTURE

SHEET NUMBER	SHEET NAME
05 STRUCTURAL	
SP101	GENERAL NOTES
SP102	GENERAL NOTES
SP103	GENERAL NOTES
SP104	ABBREVIATIONS, PLAN NOTES AND LEGENDS
SP200	Parking Structure Plan - FOUNDATION PLAN LEVEL P0
SP201	Parking Structure Plan - LEVEL P1 FRAMING PLAN
SP202	Parking Structure Plan - LEVEL P2 FRAMING PLAN
SP203	Parking Structure Plan - LEVEL P3 FRAMING PLAN
SP204	Parking Structure Plan - LEVEL P4 FRAMING PLAN
SP205	Parking Structure Plan - LEVEL P5 FRAMING PLAN
SP206	Parking Structure Plan - LEVEL P6 FRAMING PLAN
SP207	Parking Structure Plan - LEVEL P7 FRAMING PLAN
SP210	PARTIAL FRAMING PLANS
SP211	PARTIAL FRAMING PLANS
SP301	SHEAR WALL ELEVATIONS
SP302	SHEAR WALL ELEVATIONS
SP303	BEAM ELEVATION GRID PA
SP304	BEAM ELEVATION GRID PB
SP305	BEAM ELEVATION GRID PB.5
SP306	BEAM ELEVATION GRID PC
SP307	BEAM ELEVATION GRID PD
SP308	BEAM ELEVATION GRID PE
SP309	BEAM ELEVATION GRID PF
SP310	BEAM ELEVATION GRID PG
SP311	BEAM ELEVATION GRID PH
SP312	BEAM ELEVATION GRID PJ
SP313	BEAM ELEVATION GRID PK
SP314	BEAM ELEVATION GRID PL
SP315	BEAM ELEVATION GRID PL.5
SP316	BEAM ELEVATION GRID PM
SP317	BEAM ELEVATION GRID PN
SP318	SNOW CHUTE ELEVATIONS
SP501	TYPICAL CONCRETE DETAILS
SP502	TYPICAL CONCRETE DETAILS
SP503	CONCRETE SECTIONS AND DETAILS
SP504	ELEVATOR PIT DETAILS
SP505	COLUMN TYPES AND SCHEDULE
SP506	CONCRETE DETAILS
SP507	CONCRETE SHEAR WALL SECTIONS
SP510	TYPICAL PT DETAILS
SP511	TYPICAL PT DETAILS
SP512	TYPICAL BEAM SECTIONS AND ELEVATIONS
SP513	TYPICAL PT BEAM DETAILS
SP514	CONCRETE DETAILS
SP520	TYPICAL CABLE RAIL DETAIL
SP601	TYPICAL STEEL DETAILS
SP602	TYPICAL STEEL DETAILS
SP603	TYPICAL STEEL DETAILS
SP604	STEEL DETAILS
SP605	STEEL DETAILS
SP606	MISC STEEL DETAILS
SP607	STAIR FRAMING DETAILS
SP610	CANOPY FRAMING DETAILS
SP611	METAL FRAMING DETAILS

DRAWING INDEX - PARKING STRUCTURE

SHEET NUMBER	SHEET NAME
06 MECHANICAL	
MP001	LEGEND
MP002	MECHANICAL SCHEDULES
MP200	FLOOR PLAN - MECHANICAL - LEVEL P0
MP201	FLOOR PLAN - MECHANICAL - LEVEL P1
MP202	FLOOR PLAN - MECHANICAL - LEVEL P2
MP203	FLOOR PLAN - MECHANICAL - LEVEL P3
MP204	FLOOR PLAN - MECHANICAL - LEVEL P4
MP205	FLOOR PLAN - MECHANICAL - LEVEL P5
MP206	FLOOR PLAN - MECHANICAL - LEVEL P6
MP207	FLOOR PLAN - MECHANICAL - LEVEL P7
MP301	SKYBRIDGES - MECHANICAL
MP302	ENLARGED PLAN - LEVEL P0 - GENERATOR ROOM
MP401	DETAILS AND DIAGRAMS - MECHANICAL
MP402	DETAILS AND DIAGRAMS - MECHANICAL
07 ELECTRICAL	
EP100	ELECTRICAL LEGEND
EP101	LIGHTING FIXTURE & PANEL SCHEDULE
EP102	PANEL SCHEDULES
EP103	PANEL SCHEDULES
EP200	FLOOR PLAN - LIGHTING - LEVEL PB
EP201	FLOOR PLAN - LIGHTING - LEVEL PG
EP202	FLOOR PLAN - LIGHTING - LEVEL P1
EP203	FLOOR PLAN - LIGHTING - LEVEL P2
EP204	FLOOR PLAN - LIGHTING - LEVEL P3
EP205	FLOOR PLAN - LIGHTING - LEVEL P4
EP206	FLOOR PLAN - LIGHTING - LEVEL P5
EP207	FLOOR PLAN - LIGHTING - LEVEL P6
EP300	FLOOR PLAN - POWER & SPECIAL SYSTEMS - LEVEL PB
EP301	FLOOR PLAN - POWER & SPECIAL SYSTEMS - LEVEL PG
EP302	FLOOR PLAN - POWER & SPECIAL SYSTEMS - LEVEL P1
EP303	FLOOR PLAN - POWER & SPECIAL SYSTEMS - LEVEL P2
EP304	FLOOR PLAN - POWER & SPECIAL SYSTEMS - LEVEL P3
EP305	FLOOR PLAN - POWER & SPECIAL SYSTEMS - LEVEL P4
EP306	FLOOR PLAN - POWER & SPECIAL SYSTEMS - LEVEL P5
EP307	FLOOR PLAN - POWER & SPECIAL SYSTEMS - LEVEL P6
EP401	ENLARGED PLAN - SKYBRIDGE
EP502	ENLARGED FLOOR PLANS - ELECTRICAL
EP503	ENLARGED FLOOR PLANS - ELECTRICAL
EP701	ONE-LINE DIAGRAM - TELECOM
EP801	PARTIAL POWER ONE-LINE DIAGRAM

Grand total: 172

GENERAL INDEX NOTES

1. THIS SUBMITTAL REFERENCES SEPARATE, PREVIOUSLY SUBMITTED, VOLUMES 1a, 1b & 1c.
2. VOLUME 2 PERTAINS TO THE PARKING STRUCTURE AND SKYBRIDGE AREAS FOR THIS PROJECT; SEPARATELY SUBMITTED VOLUMES 1a, 1b & 1c PERTAIN TO THE CLINIC BUILDING AND NORTH ALLEY AREAS.
3. SEE VOLUME 1a FOR ARCHITECTURAL ABBREVIATIONS, SYMBOLS AND GENERAL ARCHITECTURAL NOTES.

RECORD DRAWINGS

AS BUILT DRAWING
THIS DRAWING HAS BEEN PREPARED FROM CONTRACTOR FURNISHED INFORMATION. KUMIN ASSOCIATES, INC. MAKES NO WARRANTY, EXPRESSED OR IMPLIED, WITH REGARD TO THE ACCURACY OR COMPLETENESS OF THE INFORMATION NOW RECORDED IN THIS DRAWING. KUMIN ASSOCIATES, INC. WILL NOT ASSUME ANY LIABILITY, PROFESSIONAL OBLIGATION OR RISK THAT MIGHT OCCUR DUE TO THE RE-USE OF THIS INFORMATION.

KUMIN
ARCHITECTURE INTERIORS PLANNING
9101 JEWEL LAKE ROAD, STE.200
ANCHORAGE, AK 99502
907.272.5863
CAA LICENSE: AC-00201

NEESE CONSTRUCTION, INC.

Childrens Dental Clinic Building

4441 Diplomacy Drive, Anchorage AK 99508

Southcentral Foundation

No.	Description	Date

Drawn By: SS
Checked By: SS
Date: 24 DEC 2018
Phase: RECORD DRAWINGS
Job No: 21519.00
SHEET TITLE: Sheet Index
SHEET NO: GP101

04/2019 2:18:53 AM

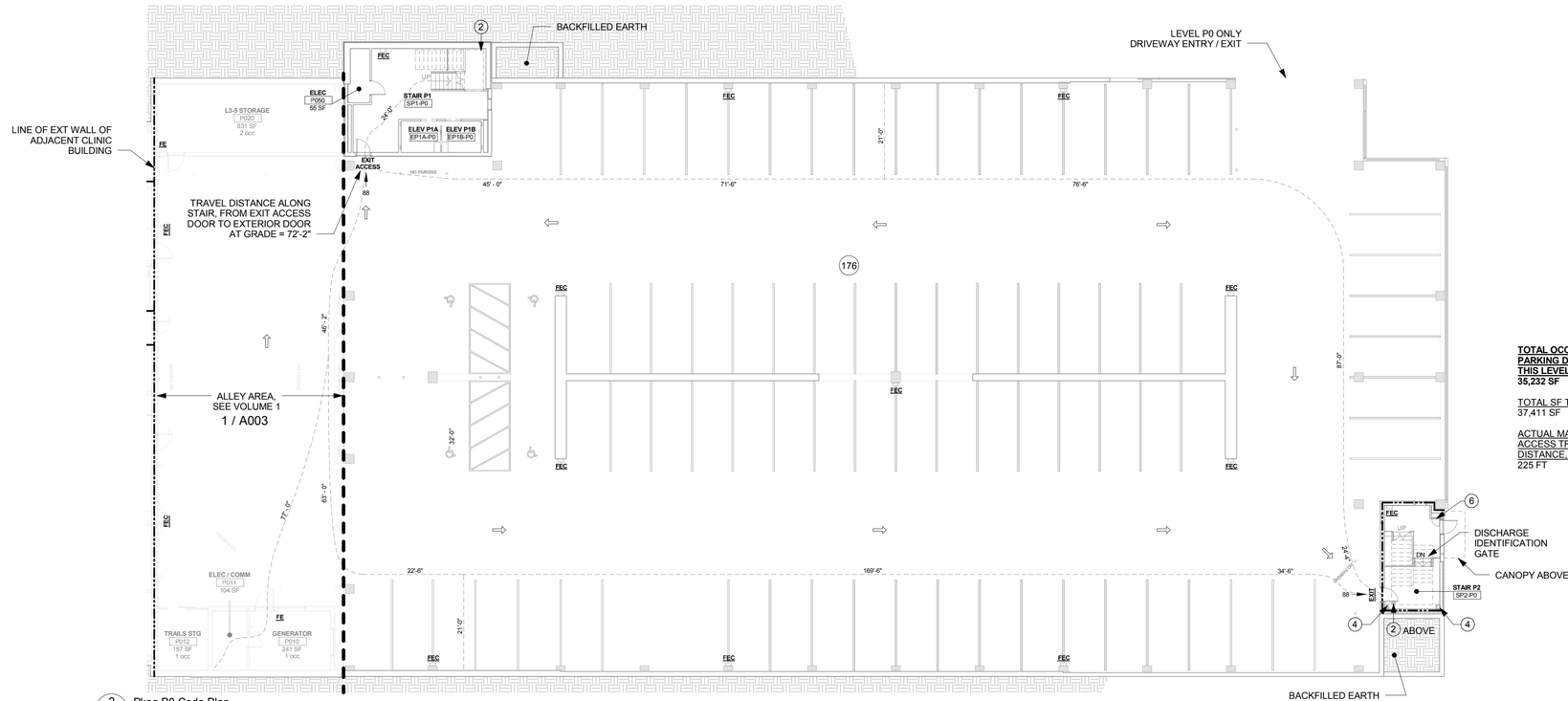

2 AP003 Pkng P0 Code Plan
Scale: 1/16" = 1'-0"

TOTAL OCCUPIABLE PARKING DECK AREA THIS LEVEL:
35,232 SF

TOTAL SF THIS LEVEL:
37,411 SF

ACTUAL MAX. EXIT ACCESS TRAVEL DISTANCE, THIS LEVEL:
225 FT

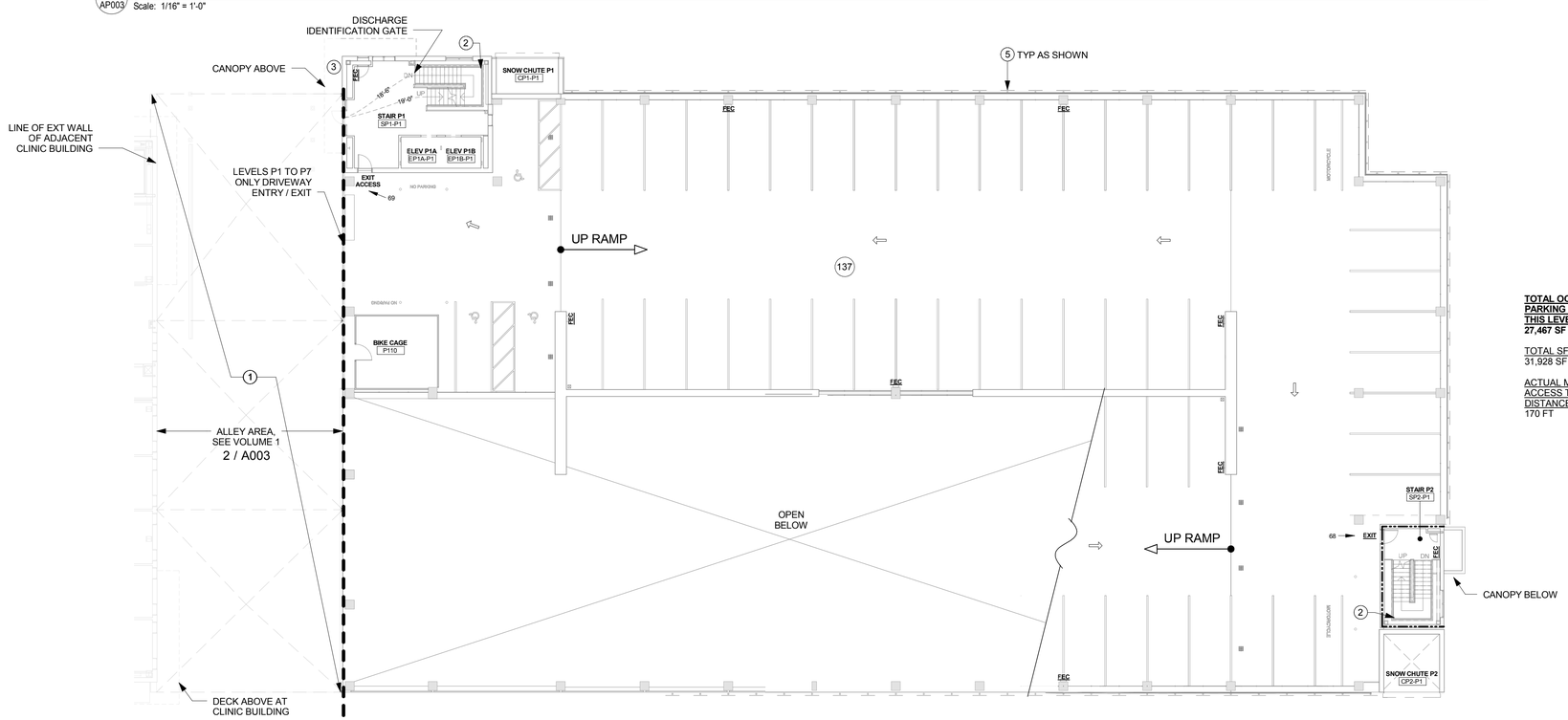

1 AP003 Pkng P1 Code Plan
Scale: 1/16" = 1'-0"

TOTAL OCCUPIABLE PARKING DECK AREA THIS LEVEL:
27,467 SF

TOTAL SF THIS LEVEL:
31,928 SF

ACTUAL MAX. EXIT ACCESS TRAVEL DISTANCE, THIS LEVEL:
170 FT

GENERAL PKNG CODE PLAN NOTES

(APPLIES TO ALL PKNG CODE PLANS UNO)

1. PARKING STRUCTURE IS OCCUPANCY GROUP S-2, TYP
2. PARKING STRIPING IS SHOWN FOR REFERENCE ONLY, REFER TO PARKING PLANS FOR DIMENSIONS AND FINAL LAYOUT
3. ALLEY AREA BETWEEN GRIDS A & PA ARE NOT INCLUDED IN THIS PACKAGE. SEE SEPARATE BUILDING PACKAGE, VOLUME 1 FOR THIS AREA, TYP
4. SEE VOLUME 1 CODE PLANS FOR SEPARATION DISTANCES BETWEEN PARKING STRUCTURE AND CLINIC BUILDING, TYP

NOTE:

SEE SHEET A002 IN VOLUME 1 (CLINIC BUILDING) FOR CODE COMPLIANCE INFORMATION AND NOTES OTHER THAN IECC NOTES

SHEET NOTES

1. 1-HR ROOF ASSEMBLY WITH 1-HR PROTECTED FRAMING
2. STANDPIPE RISER LOCATION, COORD W/ MECH
3. FDC, SEE CIVIL & MECH
4. 2-HR PROTECTED COLUMN. SEE FIRE PROTECTION PLANS FOR LOCATIONS OF 2-HR BEAM PROTECTION ABOVE
5. FAÇADE ASSEMBLY
6. 90-MINUTE RATED UNINSULATED ACCESS DOOR, 20" x 30", SILL 10" AFF TYP

2012 IECC - SKYBRIDGE & PARKING STRUCTURE:

1. IECC REQUIREMENTS ARE NOT APPLICABLE TO STAIR SP2 WHICH IS UNHEATED
2. SKYBRIDGE VESTIBULES ARE MINIMALLY HEATED AND INSULATED TO THE EXTENT POSSIBLE WITHIN CONSTRAINTS OF CONCRETE STRUCTURE
3. SEE MECHANICAL & ELECTRICAL FOR BUILDING SYSTEM COMPLIANCE INFORMATION

2012 IECC TABLE C402.2 (INCLUDING MUNI OF ANCHORAGE TITLE 23 AMENDMENTS):

	REQUIRED	PROVIDED
ROOFS		
Insulation entirely above deck:	R-30ci	R-30ci average
WALLS, ABOVE GRADE		
Metal framed:	R-13 + R-7.5ci	R-21.6ci (Stair SP1) R-13 + R-7.5ci (Skybridge Vest.)
WALLS, BELOW GRADE		
Basement:	R-8ci	R-14.5ci for 5' below grade, then R-9.5 to T.O. footing
Slab-on-grade Foundation:	R-8ci	R-9.5 to T.O. footing
FLOORS		
Mass (Skybridge soffit):	R-15ci	R-21.6ci
SLAB-ON-GRADE FLOORS		
Unheated slabs:	R-8, extending 36" below	R-9.5ci, extending 38" below
OPAQUE DOORS		
Swinging:	U-0.50	U-0.50

2012 IECC TABLE C402.3 (INCLUDING MUNI OF ANCHORAGE TITLE 23 AMENDMENTS):

	REQUIRED	PROVIDED
VERTICAL FENESTRATION		
Framing materials other than metal with or without metal reinforcement or cladding (Punch windows):	U-0.35	U-0.27
Metal framing with or without thermal break - Curtain wall/storefront:	U-0.40	Curtainwall: U-0.36 Storefront: U-0.36
Metal framing with or without thermal break - Entrance doors:	U-0.80	U-0.50
Metal framing with or without thermal break - All other - including operable windows, fixed windows and non-entrance doors:	U-0.45	U-0.45
SHGC - PF<0.25:	0.45	0.45
SHGC - PF ≥0.25:	No Requirement	N/A

CODE PLAN LEGEND
(APPLIES TO CODE PLANS ON FOLLOWING SHEETS, UNO)

- SMOKE SEALED
- 1-HOUR RATING
- 2-HOUR RATING
- EXIT — EXIT FROM STORY
- 200 — TOTAL OCCUPANTS PER STORY
- ## — NUMBER OCCUPANTS EXITING IN INDICATED DIRECTION FROM SPACE
- APPROXIMATE SPACE BOUNDARY
- ACTUAL OCCUPIED AREA WITHIN SPACE
- FE — FIRE EXTINGUISHER
- FEC — FIRE EXTINGUISHER IN CABINET
- PRIMARY EGRESS DIRECTION
- 16'-6" — LONGEST EXIT TRAVEL PATH & DISTANCE ALONG INDICATED PATH SEGMENT
- MATCH LINE, SEE VOLUME 1 FOR CONTINUATION

SCALE: 1/16" = 1' - 0"
0' 8' 16' 32' 64'

RECORD DRAWINGS

AS BUILT DRAWING
THIS DRAWING HAS BEEN PREPARED FROM CONTRACTOR FURNISHED INFORMATION. KUMIN ASSOCIATES, INC. MAKES NO WARRANTY, EXPRESSED OR IMPLIED, WITH REGARD TO THE ACCURACY OR COMPLETENESS OF THE INFORMATION NOW RECORDED IN THIS DRAWING. KUMIN ASSOCIATES, INC. WILL NOT ASSUME ANY LIABILITY, PROFESSIONAL OBLIGATION OR RISK THAT MIGHT OCCUR DUE TO THE RE-USE OF THIS INFORMATION.

KUMIN
ARCHITECTURE INTERIORS PLANNING
1049 W 5th AVE, SUITE 100
ANCHORAGE, AK 99501
907.272.5863 FAX 272.5893
CA LICENSE: AC-25251
NEESE CONSTRUCTION, INC.

Childrens Dental Clinic Building

4441 Diplomacy Drive, Anchorage AK 99508
Southcentral Foundation

No.	Description	Date

Drawn By: SS
Checked By: JS
Date: 24 DEC 2018
Phase: RECORD DRAWINGS
Job No: 21519.00
SHEET TITLE: Code Plans, Code Notes
SHEET NO: AP003

1/4/2019 1:58:15 AM

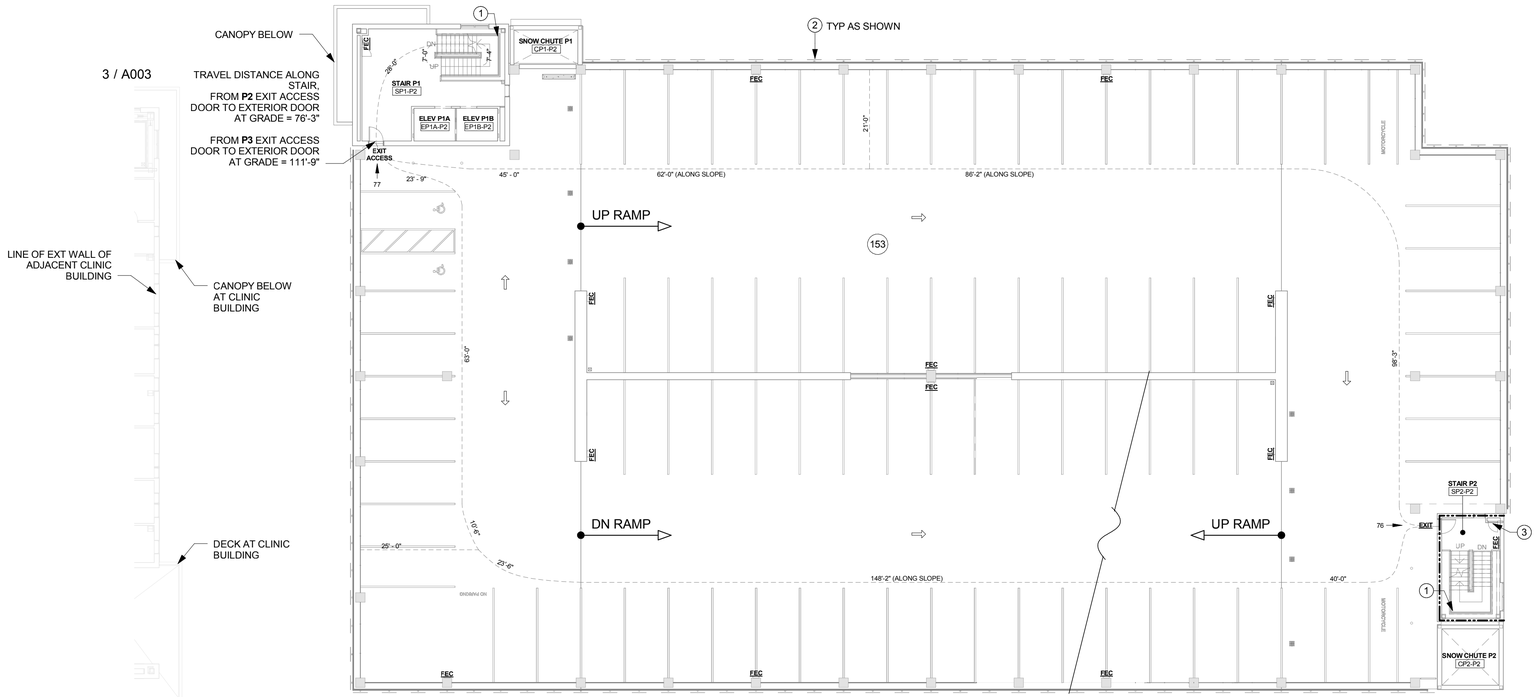

2 AP004 Pkng P2 Code Plan (P3 Sim)
Scale: 1/16" = 1'-0"

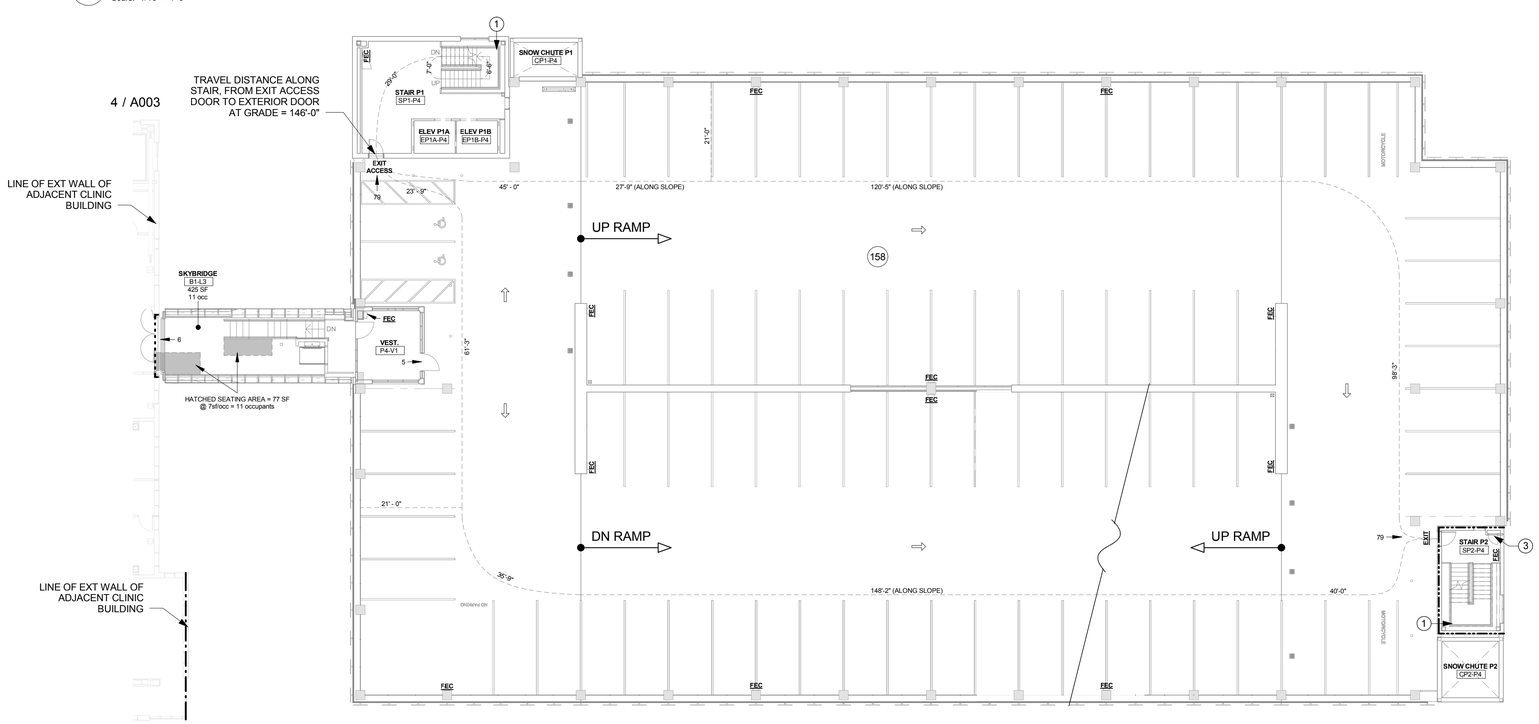

1 AP004 Pkng P4 Code Plan
Scale: 1/16" = 1'-0"

TOTAL OCCUPIABLE PARKING DECK AREA THIS LEVEL:
30,624 SF

TOTAL SF THIS LEVEL:
31,928 SF

ACTUAL MAX. EXIT ACCESS TRAVEL DISTANCE, LEVEL P2:
214 FT

ACTUAL MAX. EXIT ACCESS TRAVEL DISTANCE, LEVEL P3:
232 FT

TOTAL OCCUPIABLE PARKING DECK AREA THIS LEVEL:
30,624 SF

TOTAL SF THIS LEVEL:
31,928 SF

ACTUAL MAX. EXIT ACCESS TRAVEL DISTANCE, THIS LEVEL:
252 FT

GENERAL PKNG CODE PLAN NOTES

1. SEE SHEET AP003 FOR GENERAL PARKING STRUCTURE CODE PLAN NOTES AND LEGEND

SHEET NOTES

1 STANDPIPE RISER LOCATION, COORD W/ MECH
2 FAÇADE ASSEMBLY
3 90-MINUTE RATED UNINSULATED ACCESS DOOR, 24" x 30", SILL 60" AFF

CODE PLAN LEGEND
(APPLIES TO CODE PLANS ON FOLLOWING SHEETS, UNO)

- SMOKE SEALED
- 1-HOUR RATING
- 2-HOUR RATING
- EXIT — EXIT FROM STORY
- 200 — TOTAL OCCUPANTS PER STORY
- ## — NUMBER OCCUPANTS EXITING IN INDICATED DIRECTION FROM SPACE
- APPROXIMATE SPACE BOUNDARY
- ACTUAL OCCUPIED AREA WITHIN SPACE
- FE — FIRE EXTINGUISHER
- FEC — FIRE EXTINGUISHER IN CABINET
- PRIMARY EGRESS DIRECTION
- 15'-6" — LONGEST EXIT TRAVEL PATH & DISTANCE ALONG INDICATED PATH SEGMENT
- MATCH LINE, SEE VOLUME 1 FOR CONTINUATION

SCALE: 1/16" = 1' - 0"
0' 8' 16' 32' 64'

RECORD DRAWINGS

AS BUILT DRAWING
THIS DRAWING HAS BEEN PREPARED FROM CONTRACTOR FURNISHED INFORMATION. KUMIN ASSOCIATES, INC. MAKES NO WARRANTY, EXPRESSED OR IMPLIED, WITH REGARD TO THE ACCURACY OR COMPLETENESS OF THE INFORMATION NOW RECORDED IN THIS DRAWING. KUMIN ASSOCIATES, INC. WILL NOT ASSUME ANY LIABILITY, PROFESSIONAL OBLIGATION OR RISK THAT MIGHT OCCUR DUE TO THE RE-USE OF THIS INFORMATION.

KUMIN
ARCHITECTURE INTERIORS PLANNING
800 E STREET, STE 200
ANCHORAGE, AK 99501
T 907.272.8633
CoA NUMBER AEC2231
NEESER CONSTRUCTION, INC.

Childrens Dental Clinic Building
4441 Diplomacy Drive, Anchorage AK 99508
Southcentral Foundation

No.	Description	Date

Drawn By: SS
Checked By: JS
Date: 24 DEC 2018
Phase: RECORD DRAWINGS
Job No: 21519.00
SHEET TITLE: Code Plans

SHEET NO:
AP004

14/2019 1:58:24 AM

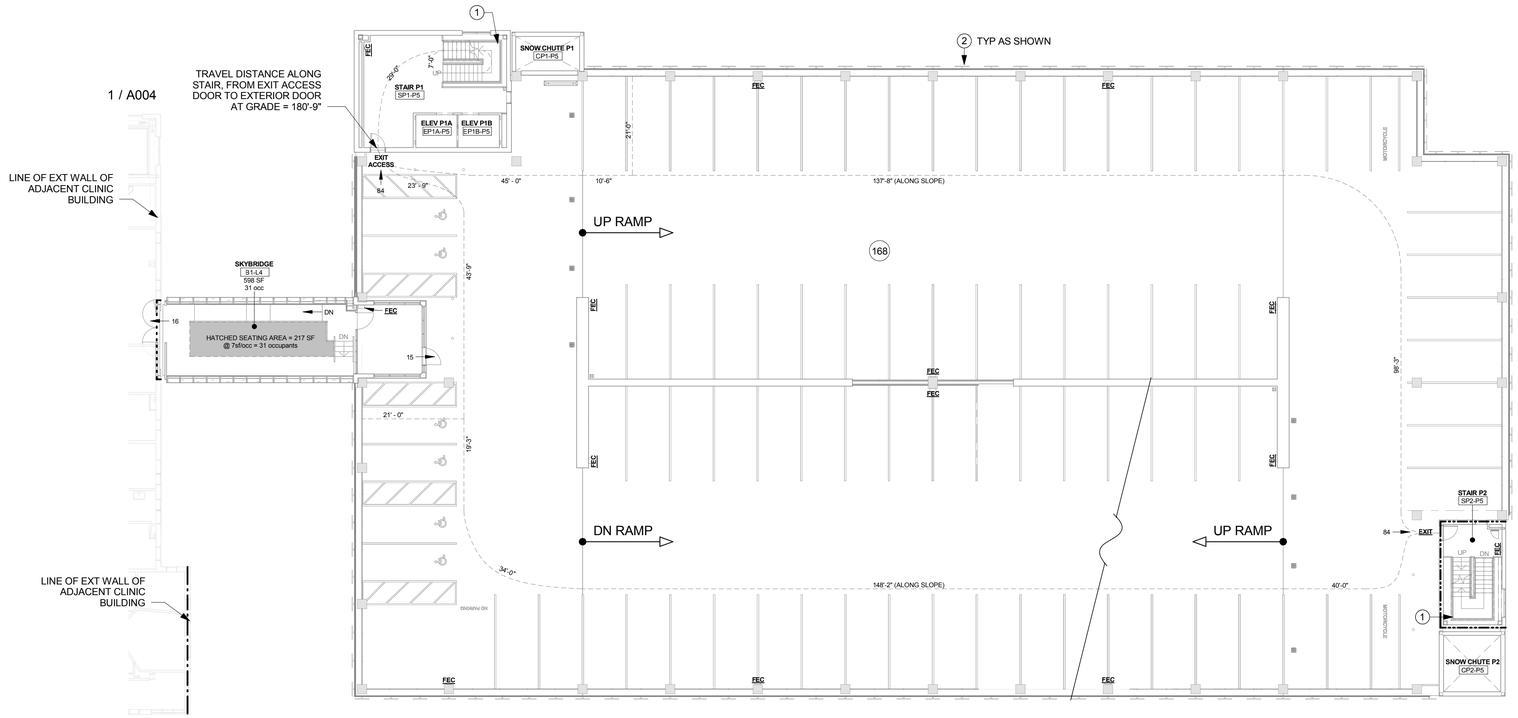

2 Pkng P5 Code Plan
1/16" = 1'-0"

TOTAL OCCUPIABLE PARKING DECK AREA THIS LEVEL:
30,624 SF

TOTAL SF THIS LEVEL:
31,928 SF

ACTUAL MAX. EXIT ACCESS TRAVEL DISTANCE, THIS LEVEL:
270 FT

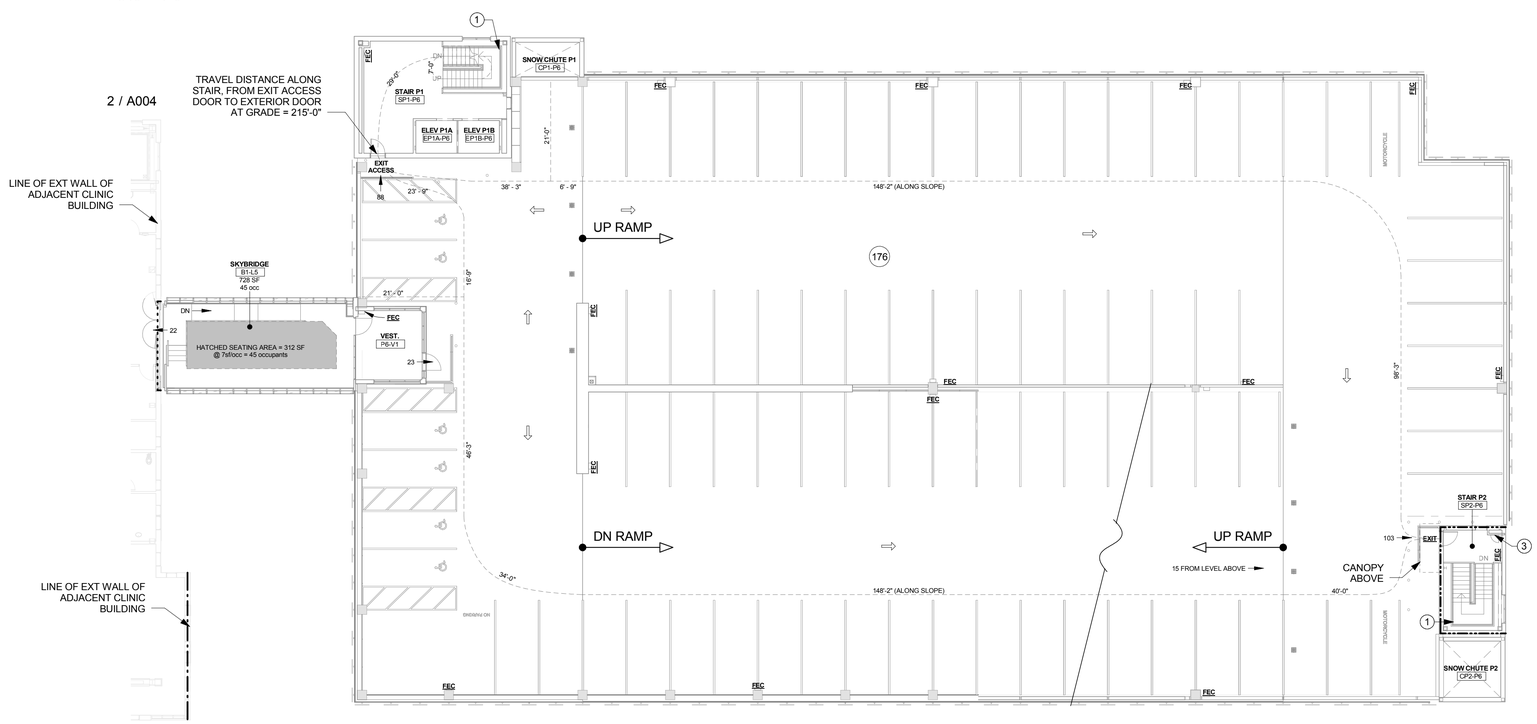

1 Pkng P6 Code Plan
AP005 Scale: 1/16" = 1'-0"

TOTAL OCCUPIABLE PARKING DECK AREA THIS LEVEL:
30,624 SF

TOTAL SF THIS LEVEL:
31,928 SF

ACTUAL MAX. EXIT ACCESS TRAVEL DISTANCE, THIS LEVEL:
287 FT

GENERAL PKNG CODE PLAN NOTES

1. SEE SHEET AP003 FOR GENERAL PARKING STRUCTURE CODE PLAN NOTES AND LEGEND

SHEET NOTES

1 STANDPIPE RISER LOCATION, COORD W/ MECH
2 FAÇADE ASSEMBLY
3 90-MINUTE RATED UNINSULATED ACCESS DOOR, 20" x 30", SILL 10" AFF TYP

CODE PLAN LEGEND
(APPLIES TO CODE PLANS ON FOLLOWING SHEETS, UNO)

- SMOKE SEALED
- 1-HOUR RATING
- 2-HOUR RATING
- EXIT — EXIT FROM STORY
- 200 — TOTAL OCCUPANTS PER STORY
- NUMBER OCCUPANTS EXITING IN INDICATED DIRECTION FROM SPACE
- APPROXIMATE SPACE BOUNDARY
- ACTUAL OCCUPIED AREA WITHIN SPACE
- FE — FIRE EXTINGUISHER
- FEC — FIRE EXTINGUISHER IN CABINET
- PRIMARY EGRESS DIRECTION
- 15'-6" — LONGEST EXIT TRAVEL PATH & DISTANCE ALONG INDICATED PATH SEGMENT
- MATCH LINE, SEE VOLUME 1 FOR CONTINUATION

SCALE: 1/16" = 1' - 0"
0' 8' 16' 32' 64'

RECORD DRAWINGS

AS BUILT DRAWING
THIS DRAWING HAS BEEN PREPARED FROM CONTRACTOR FURNISHED INFORMATION. KUMIN ASSOCIATES, INC. MAKES NO WARRANTY, EXPRESSED OR IMPLIED, WITH REGARD TO THE ACCURACY OR COMPLETENESS OF THE INFORMATION NOW RECORDED IN THIS DRAWING. KUMIN ASSOCIATES, INC. WILL NOT ASSUME ANY LIABILITY, PROFESSIONAL OBLIGATION OR RISK THAT MIGHT OCCUR DUE TO THE RE-USE OF THIS INFORMATION.

KUMIN
ARCHITECTURE INTERIORS PLANNING
1049 W 5th AVE, SUITE 200
ANCHORAGE, AK 99501
907.272.5863 CA LICENSE: AC-25291
NEESE CONSTRUCTION, INC.

Childrens Dental Clinic Building

4441 Diplomacy Drive, Anchorage AK 99508
Southcentral Foundation

No.	Description	Date

Drawn By: SS
Checked By: JS
Date: 24 DEC 2018
Phase: RECORD DRAWINGS
Job No: 21519.00
SHEET TITLE: Code Plans
SHEET NO: AP005

1/4/2019 1:58:32 AM

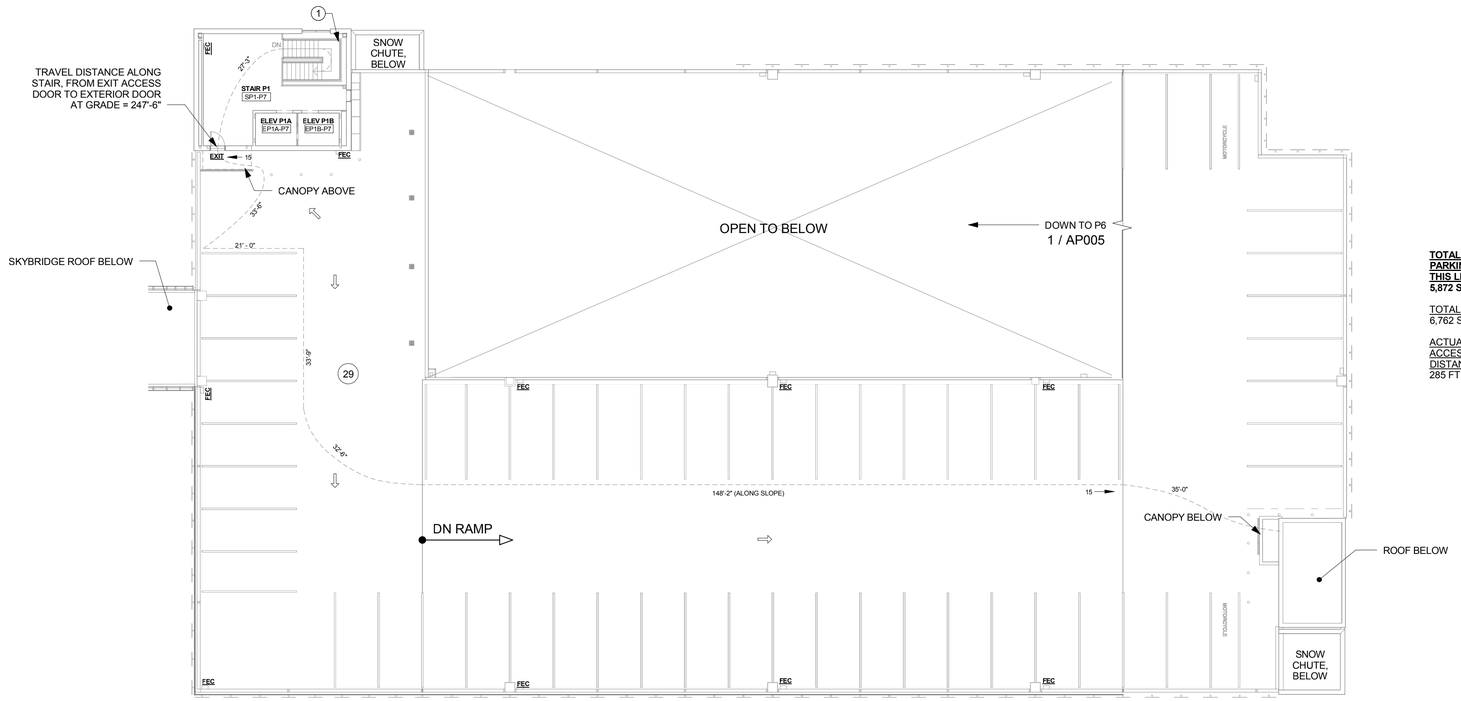

1 Pkng P7 Code Plan
1/16" = 1'-0"

GENERAL PKNG CODE PLAN NOTES

1. SEE SHEET AP003 FOR GENERAL PARKING STRUCTURE CODE PLAN NOTES AND LEGEND

TOTAL OCCUPIABLE PARKING DECK AREA THIS LEVEL:
5,872 SF

TOTAL SF THIS LEVEL:
6,762 SF

ACTUAL MAX. EXIT ACCESS TRAVEL DISTANCE, THIS LEVEL:
285 FT

SHEET NOTES

1 STANDPIPE RISER LOCATION, COORD W/ MECH

CODE PLAN LEGEND
(APPLIES TO CODE PLANS ON FOLLOWING SHEETS, UNO)

- SMOKE SEALED
- 1-HOUR RATING
- 2-HOUR RATING
- EXIT — EXIT FROM STORY
- 200 — TOTAL OCCUPANTS PER STORY
- ## — NUMBER OCCUPANTS EXITING IN INDICATED DIRECTION FROM SPACE
- APPROXIMATE SPACE BOUNDARY
- ACTUAL OCCUPIED AREA WITHIN SPACE
- FE — FIRE EXTINGUISHER
- FEC — FIRE EXTINGUISHER IN CABINET
- PRIMARY EGRESS DIRECTION
- 15'-6" — LONGEST EXIT TRAVEL PATH & DISTANCE ALONG INDICATED PATH SEGMENT
- MATCH LINE, SEE VOLUME 1 FOR CONTINUATION

SCALE: 1/16" = 1' - 0"
0' 8' 16' 32' 64'

RECORD DRAWINGS

AS BUILT DRAWING
THIS DRAWING HAS BEEN PREPARED FROM CONTRACTOR FURNISHED INFORMATION. KUMIN ASSOCIATES, INC. MAKES NO WARRANTY, EXPRESSED OR IMPLIED, WITH REGARD TO THE ACCURACY OR COMPLETENESS OF THE INFORMATION NOW RECORDED IN THIS DRAWING. KUMIN ASSOCIATES, INC. WILL NOT ASSUME ANY LIABILITY, PROFESSIONAL OBLIGATION OR RISK THAT MIGHT OCCUR DUE TO THE RE-USE OF THIS INFORMATION.

KUMIN
ARCHITECTURE INTERIORS PLANNING
1400 W BENSON BLVD, SUITE 200
ANCHORAGE, AK 99503
907.272.5863 CA LICENSE: AC-22231

NEESE CONSTRUCTION, INC.

Childrens Dental Clinic Building

4441 Diplomacy Drive, Anchorage AK 99508
Southcentral Foundation

No.	Description	Date

Drawn By: SS
Checked By: JS
Date: 24 DEC 2018
Phase: RECORD DRAWINGS
Job No: 21519.00
SHEET TITLE: Code Plans
SHEET NO: AP006

04/2019 1:58:35 AM

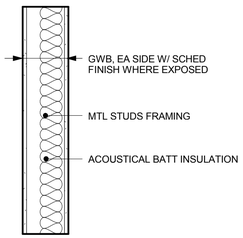

RATINGS	MODIFIERS
FIRE: SMOKE SEALED	NONE
STC: NONE	

P3 **SMOKE SEALED PARTITION**

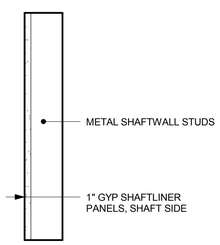

RATINGS	MODIFIERS
FIRE: NONE	NONE
STC: NONE	

P2 **NON-RATED SHAFTWALL CHASE**

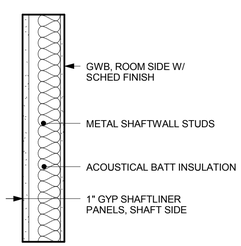

RATINGS	MODIFIERS
FIRE: NONE	NONE
STC: NONE	

P1 **NON-RATED SHAFTWALL**

Pkng Interior Partition/Wall Types
1" = 1'-0"

PH **NOT USED**

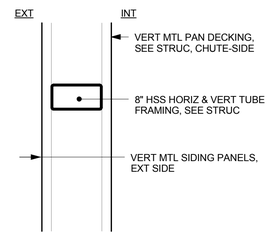

RATINGS	MODIFIERS
FIRE: NONE	NONE

PG **TYP UPPER LEVEL SNOW CHUTE WALL**

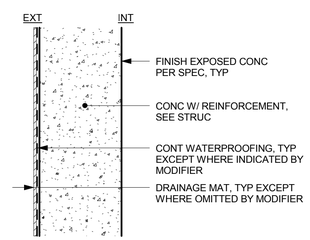

RATINGS	MODIFIERS
FIRE: NONE	a. CONT DAMPPROOFING IN LIEU OF WATERPROOFING b. NO DRAINAGE MAT c. NO WATER- OR DAMPPROOFING

PK **UNINSULATED FOUNDATION**

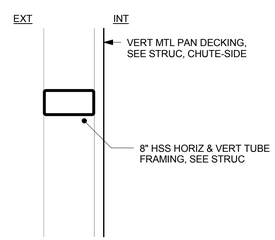

RATINGS	MODIFIERS
FIRE: NONE	NONE

PJ **UPPER LEVEL SNOW CHUTE WALL NO EXT FINISH**

Pkng Exterior Wall Types
1" = 1'-0"

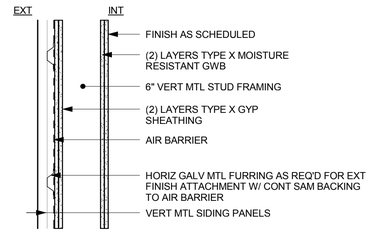

RATINGS	MODIFIERS
FIRE: 2-HR (SIM TO UL U419)	NONE

PD **2-HR NON-INSULATED EXT STAIR TOWER WALL**

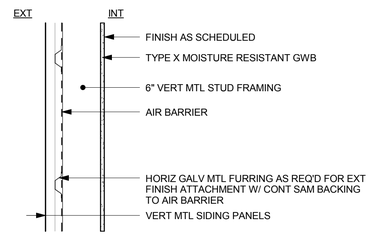

RATINGS	MODIFIERS
FIRE: NONE	NONE

PC **NON-INSULATED EXT STAIR TOWER WALL**

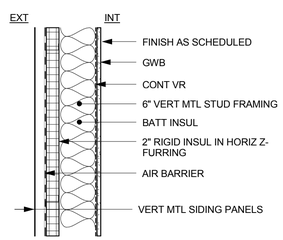

RATINGS	MODIFIERS
FIRE: NONE	NONE

PF **SKYBRIDGE VESTIBULE**

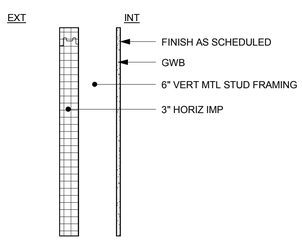

RATINGS	MODIFIERS
FIRE: NONE	NONE

PB **TYPICAL EXT STAIR TOWER WALL - NO EXT FINISH**

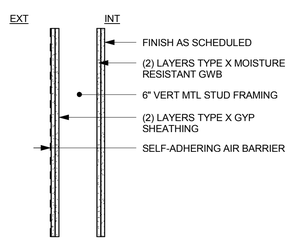

RATINGS	MODIFIERS
FIRE: 2-HR (SIM TO UL U419)	NONE

PE **2-HR NON-INSULATED EXT STAIR TOWER WALL - NO EXT FINISH**

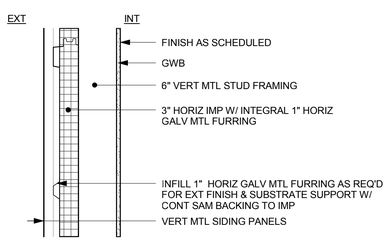

RATINGS	MODIFIERS
FIRE: NONE	NONE

PA **TYPICAL EXT STAIR TOWER WALL**

GENERAL PARKING GARAGE & SKYBRIDGE WALL TYPE NOTES

1. SEE SHEET AP003 FOR MINIMUM ASSEMBLY INSULATION VALUES, TYP
2. SEE VOLUME 1a SHEETS A031-A032 FOR ADDITIONAL GENERAL TYPE NOTES FOR WALL ASSEMBLIES, TYP
3. SEE VOLUME 1a SHEETS A031 & A031.1 FOR EXTERIOR WALL TYPES A-Z (NOT ALL MAY APPLY)
4. SEE VOLUME 1a SHEET A032 FOR INTERIOR WALL TYPES 1-20 (NOT ALL MAY APPLY)

AS BUILT DRAWING
THIS DRAWING HAS BEEN PREPARED FROM CONTRACTOR FURNISHED INFORMATION. KUMIN ASSOCIATES, INC. MAKES NO WARRANTY, EXPRESSED OR IMPLIED, WITH REGARD TO THE ACCURACY OR COMPLETENESS OF THE INFORMATION NOW RECORDED IN THIS DRAWING. KUMIN ASSOCIATES, INC. WILL NOT ASSUME ANY LIABILITY, PROFESSIONAL OBLIGATION OR RISK THAT MIGHT OCCUR DUE TO THE RE-USE OF THIS INFORMATION.

KUMIN
ARCHITECTURE INTERIORS PLANNING
9101 JEWEL LAKE ROAD, STE.200
ANCHORAGE, AK 99502
(907) 272-5863 CA LICENSE: AC-25231
NEESE CONSTRUCTION, INC.

Childrens Dental Clinic Building

4441 Diplomacy Drive, Anchorage AK 99508

Southcentral Foundation

No.	Description	Date

Drawn By: SS
Checked By: JS
Date: 24 DEC 2018
Phase: RECORD DRAWINGS
Job No: 21519.00
SHEET TITLE: Wall Types
SHEET NO: AP030

SCALE: 1" = 1' - 0"
0' 6" 1' 2' 4'

RECORD DRAWINGS

1/4/2019 1:56:35 AM

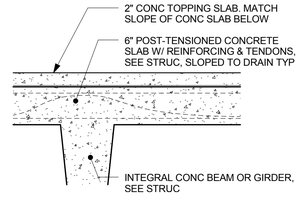

RATINGS

FIRE: 2-HR FLOOR & FRAMING
STC: NONE
IIC: NONE

H32 **ABOVE-GRADE POST-TENSIONED CONC SLAB W/ CONC TOPPING**

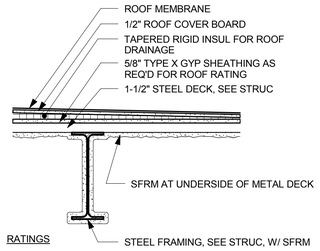

RATINGS

FIRE: 1-HR ROOF & (SIM UL D902)
1-HR FRAMING
STC: NONE
IIC: NONE

H28 **UNINSULATED ROOF ASSEMBLY W/ 1-HR FRAMING**

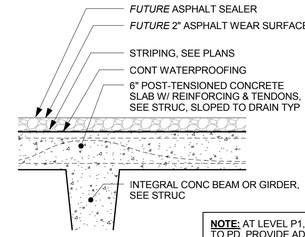

NOTE: AT LEVEL P1, GRIDS PA.1 TO PD, PROVIDE ADDITIONAL 2" CONC INTEGRAL TO SLAB IN LIEU OF ASPHALT PER STRUC W/ WATERPROOFING SEALER ON T.O. CONC

RATINGS

FIRE: 2-HR FLOOR & FRAMING
STC: NONE
IIC: NONE

H24 **ABOVE-GRADE POST-TENSIONED CONC SLAB W/ *FUTURE* ASPHALT TOPPING**

GENERAL PARKING GARAGE & SKYBRIDGE HORIZONTAL ASSEMBLY TYPE NOTES

1. SEE SHEET AP003 FOR MINIMUM ASSEMBLY INSULATION VALUES, TYP
2. SEE VOLUME 1a SHEET A033 FOR ADDITIONAL GENERAL TYPE NOTES FOR HORIZONTAL ASSEMBLIES, TYP
3. SEE VOLUME 1a SHEET A033 FOR HORIZONTAL ASSEMBLY TYPES H1-H20 (NOT ALL MAY APPLY)
4. ALL INSULATED ROOF ASSEMBLIES ABOVE METAL DECK ARE (FROM TOP TO ABOVE METAL DECK), UNO:
   - ROOF MEMBRANE
   - 1/2" ROOF COVER BOARD
   - TAPERED RIGID INSUL FOR ROOF DRAINAGE, FOR R-30 AVERAGE OVERALL ROOF INSULATION VALUE
   - 4" BASE LAYER RIGID INSULATION
   - CONT V.R.
   - 5/8" TYPE X GYP SHEATHING THERMAL BARRIER

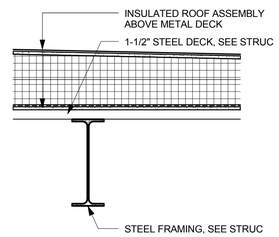

H31 **SKYBRIDGE ROOF ASSEMBLY**

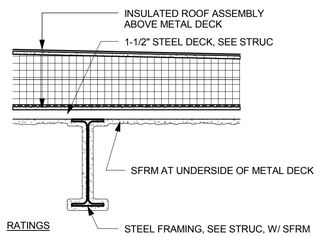

RATINGS

FIRE: 1-HR ROOF & (SIM UL D902)
1-HR FRAMING
STC: NONE
IIC: NONE

H27 **INSULATED ROOF ASSEMBLY W/ 1-HR FRAMING**

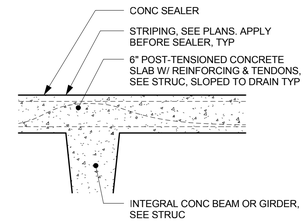

RATINGS

FIRE: 2-HR FLOOR & FRAMING
STC: NONE
IIC: NONE

H23 **TYPICAL ABOVE-GRADE POST-TENSIONED CONC SLAB**

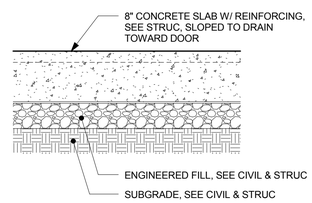

RATINGS

FIRE: NONE
STC: NONE
IIC: NONE

H30 **SNOW CHUTE SLAB ON GRADE**

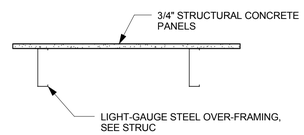

H26 **SKYBRIDGE OVER-FRAMED FLOOR**

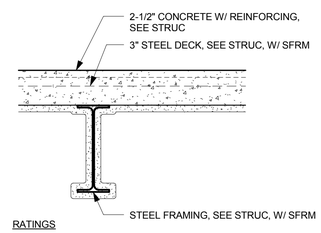

RATINGS

FIRE: 2-HR FLOOR & (SIM UL D902)
2-HR FRAMING
STC: NONE
IIC: NONE

H22 **TYPICAL ABOVE GRADE 2-HR FLOOR W/ 2-HR FRAMING**

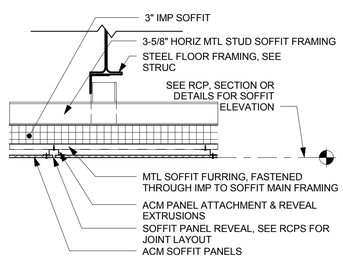

H29 **SKYBRIDGE SOFFIT**

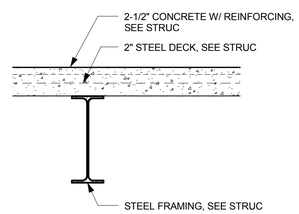

H25 **SKYBRIDGE ABOVE GRADE FLOOR**

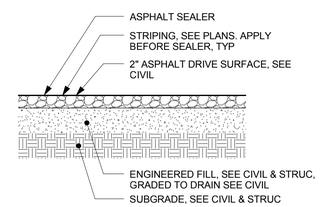

RATINGS

FIRE: NONE
STC: NONE
IIC: NONE

H21 **ASPHALT ON GRADE**

Pkng - Horizontal Assembly Types
1" = 1'-0"

AS BUILT DRAWING
THIS DRAWING HAS BEEN PREPARED FROM CONTRACTOR FURNISHED INFORMATION. KUMIN ASSOCIATES, INC. MAKES NO WARRANTY, EXPRESSED OR IMPLIED, WITH REGARD TO THE ACCURACY OR COMPLETENESS OF THE INFORMATION NOW RECORDED IN THIS DRAWING. KUMIN ASSOCIATES, INC. WILL NOT ASSUME ANY LIABILITY, PROFESSIONAL OBLIGATION OR RISK THAT MIGHT OCCUR DUE TO THE RE-USE OF THIS INFORMATION.

KUMIN
ARCHITECTURE INTERIORS PLANNING
9101 JEWEL LAKE ROAD, SUITE 200
ANCHORAGE, AK 99502
907.272.5863

NEESE BROTHERS CONSTRUCTION, INC.

Childrens Dental Clinic Building

4441 Diplomacy Drive, Anchorage AK 99508
Southcentral Foundation

No.	Description	Date

Drawn By: SS
Checked By: JS
Date: 24 DEC 2018
Phase: RECORD DRAWINGS
Job No: 21519.00
SHEET TITLE: Horizontal Assembly Types
SHEET NO: AP031

1/4/2019 1:58:37 AM

RECORD DRAWINGS

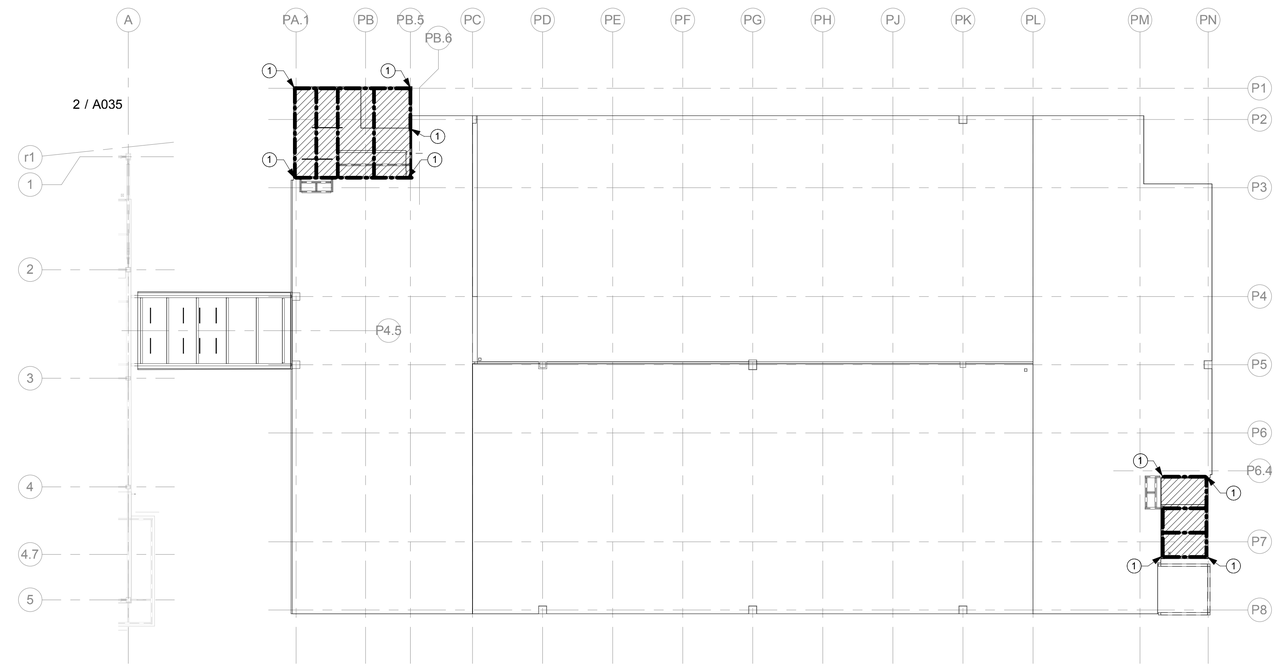

2 / AP035 Level P7 Roof Fire Protection Plan
Scale: 1" = 20'-0"

GENERAL FIRE PROTECTION PLAN NOTES

1. PRIMARY STRUCTURAL FRAME AND FLOOR CONSTRUCTION, INCLUDING ASSOCIATED SECONDARY MEMBERS, AND BEARING WALLS ARE CONCRETE MEETING 2-HOUR PROTECTION REQUIREMENTS, UNO
2. ALL PRIMARY & SECONDARY STRUCTURAL STEEL FLOOR & ROOF FRAMING INCLUDING COLUMNS, BEAMS, GIRDERS & JOISTS ARE 2-HR RATED, UNO
3. ALL PRIMARY & SECONDARY FRAMING INCLUDING COLUMNS, BEAMS & GIRDERS SUPPORTING 2-HR RATED STAIR SHAFTS SHALL BE 2-HR RATED AS INDICATED ON CODE PLANS AP003 - AP006. INDIVIDUAL 2-HR MEMBER PROTECTION SHALL BE AS INDICATED ON FIRE PROTECTION PLANS AP035 - AP03#. 2-HR PROTECTIONS SHALL BE CONTINUOUS, PROVIDED FROM THE SUPPORTING LEVEL TO THE FOUNDATION.
4. SFRM APPLIED TO UNDERSIDE OF METAL PAN DECK AT STAIR TOWERS PROVIDES REQUIRED 2-HR ASSEMBLY
5. DO NOT APPLY SFRM TO ANY ANGLED BRACES (SEE STRUC). CONSULT STRUC ENGINEER FOR TERMINATION OF SFRM AT COLUMN OR BEAM BRACE INTERFACE (FIRE PROTECTION OF BRACES NOT REQUIRED PER IBC TABLE 601)
6. SEE BUILDING LEVEL 1 FIRE PROTECTION PLAN ON SHEET A034 FOR ALLEY AREA PROTECTION SOUTH OF GRID PA.1
7. SNOW CHUTE FRAMING DOES NOT SUPPORT SURROUNDING STRUCTURE OR FLOORS AND IS NOT RATED OR PROTECTED, TYP
8. PROVIDE GWB WRAP BEAM PROTECTION IN LIEU OF SFRM WHERE INDICATED
9. BEAMS, COLUMNS AND DECKS INDICATED ARE THE CONSTRUCTION SUPPORTING THE INDICATED LEVEL (I.E. - FLOOR CONSTRUCTION FOR THE INDICATED LEVEL AND ROOF CONSTRUCTION FOR THE LEVEL BELOW THAT INDICATED)

SHEET NOTES

1 2-HR PROTECTED COLUMN
2 PROVIDE GWB WRAP BEAM PROTECTION IN LIEU OF SFRM WHERE EXPOSED WITHIN ROOM

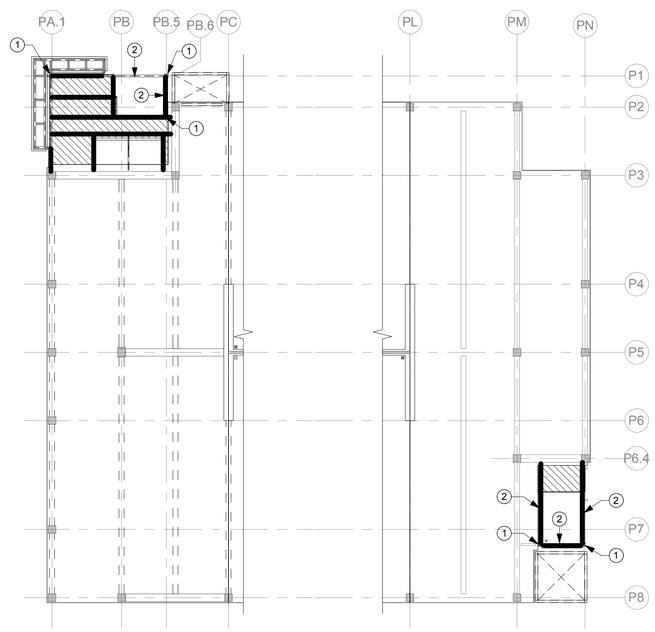

3 / AP035 Level P2 Fire Protection Plan (Levels P3-P7 North & South Ends Sim)
Scale: 1" = 20'-0"

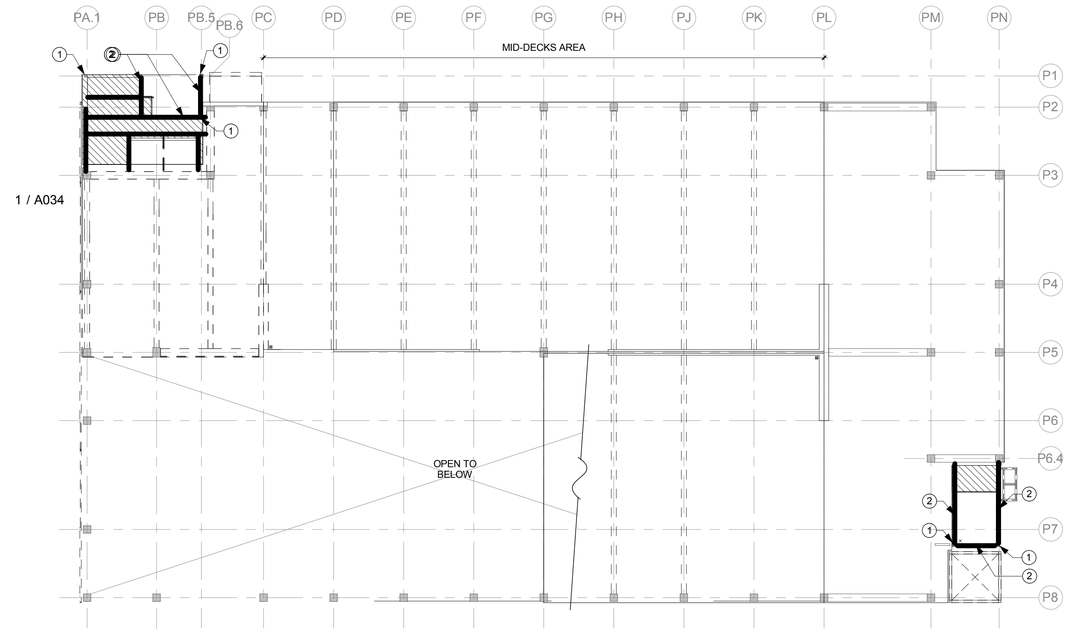

1 / AP035 Level P1 Fire Protection Plan (Levels P2-P7 Mid-Decks Area Similar)
Scale: 1" = 20'-0"

FIRE PROTECTION PLAN LEGEND

- NON-RATED STEEL FRAME
- 2-HR CONCRETE BEAM / GIRDER
- 2-HR CONCRETE COLUMN
- 1-HR INDIVIDUAL MEMBER PROTECTION
- 2-HR INDIVIDUAL MEMBER PROTECTION
- 2-HR SFRM ON UNDERSIDE OF METAL FLOOR DECK
- 1-HR SFRM ON UNDERSIDE OF METAL ROOF DECK

SCALE: 1" = 20' - 0"
0' 10' 20' 40' 80'

RECORD DRAWINGS

AS BUILT DRAWING
THIS DRAWING HAS BEEN PREPARED FROM CONTRACTOR FURNISHED INFORMATION. KUMIN ASSOCIATES, INC. MAKES NO WARRANTY, EXPRESSED OR IMPLIED, WITH REGARD TO THE ACCURACY OR COMPLETENESS OF THE INFORMATION NOW RECORDED IN THIS DRAWING. KUMIN ASSOCIATES, INC. WILL NOT ASSUME ANY LIABILITY, PROFESSIONAL OBLIGATION OR RISK THAT MIGHT OCCUR DUE TO THE RE-USE OF THIS INFORMATION.

KUMIN
ARCHITECTURE INTERIORS PLANNING
9101 JEWEL LAKE ROAD, SUITE 201
ANCHORAGE, AK 99502
(907) 272-5303 FAX
CA LICENSE: AC-25201

NEESE BUILDING CONSTRUCTION, INC.

Childrens Dental Clinic Building

4441 Diplomacy Drive, Anchorage AK 99508
Southcentral Foundation

No.	Description	Date

Drawn By: SS
Checked By: JS
Date: 24 DEC 2018
Phase: RECORD DRAWINGS
Job No: 21519.00
SHEET TITLE: Fire Protection Plans

SHEET NO:
AP035

14/2019 1:38:41 AM

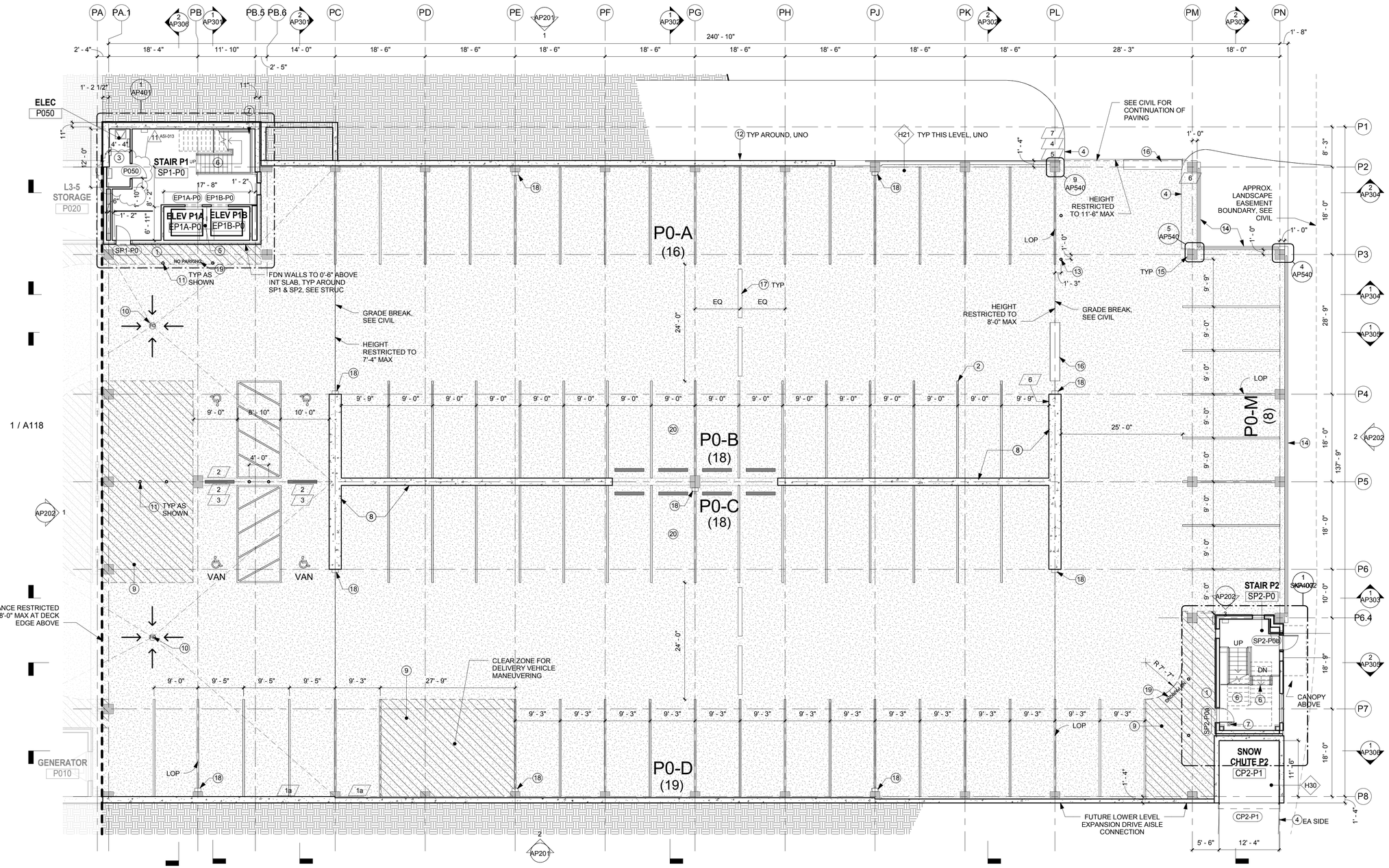

1 AP110 Pkng Plan - P0
Scale: 3/32" = 1'-0"

GENERAL FLOOR PLAN NOTES - PKNG

(APPLIES TO ALL PKNG PLAN SHEETS UNO)

1. PARKING COUNTS DO NOT INCLUDE MOTORCYCLE OR COMPACT SPACES
2. ALL STRUCTURAL STEEL EXPOSED TO WEATHER SHALL BE FINISHED WITH EXTERIOR HIGH PERFORMANCE COATING SYSTEM INCLUDING SHOP-APPLIED RUST INHIBITING PRIMER AND BASE COAT. ALL PAINT MUST BE TOUCHED UP AND DAMAGED AREAS COMPLETELY REFINISHED WITH ALL SYSTEM LAYERS FOLLOWING INSTALLATION ON-SITE. COORD W/ STRUC.
3. TYPICAL PARKING DECK SURFACE IS SEALED CONCRETE, SEE STRUC.
4. SEE AP700 SERIES SHEETS FOR STRIPING DETAILS AND TYPICAL STALL DIMENSIONS
5. 2" ASPHALT TOPPING SURFACE WHERE INDICATED, COORD STRUCTURE TO ACHEIVE LEVEL TRANSITIONS TO ADJACENT DECKS WHERE OCCURS, TYP. SEE HORIZONTAL ASSEMBLY TYPES FOR LOCATIONS WHERE PLANNED FOR *FUTURE*
   LEGEND:
6. ALL PARKING DECKS SLOPE TO DRAIN, MAX 2% SLOPE IN ANY DIRECTION AT ALL SOUTH PARKING DECKS (GRID PA.1 TO PC) TO COMPLY WITH ACCESSIBILITY REQUIREMENTS, UNO
   LEGEND: 1/8" / 12" — ARROW POINTS DOWN SLOPE, UNO
7. SEE SHEET AP030 FOR WALL TYPES
8. SEE SHEET AP031 FOR HORIZONTAL ASSEMBLY TYPES
9. SEE ENLARGED PLANS FOR ADDITIONAL INFORMATION, TYP
10. SEE AP700 SERIES SHEETS FOR SIGNAGE DETAILS
11. SEE SIGN SCHEDULE, SHEET AP700 FOR TYPE AND SIZE, TYP. SEE RCPS FOR ADDITIONAL SIGN LOCATIONS
    LEGEND: 1
12. SEE AP111 & AP112 FOR TYPICAL ABOVE GRADE GUARDRAIL, CABLE RAILING AND HEADLIGHT BARRIER PANEL CALLOUTS, TYP UNO
13. SEE ENLARGED PLANS FOR ADDITIONAL INFORMATION NOT SHOWN, INCLUDING BOLLARDS
14. DECK SLOPES INDICATED ARE APPROXIMATE. REFER TO DATUM POINT ELEVATIONS INDICATED IN SECTION FOR WORKING POINTS OF SLOPED DECKS, TYP UNO

SHEET NOTES

1 BLUE PHONE
2 PARKING STRIPING, TYP
3 SEE ELEC FOR EQUIPMENT LAYOUT
4 PAVING CURB, SEE CIVIL
5 ELEV PIT BELOW
6 STEEL STAIR W/ HANDRAILS & GUARDRAILS EA SIDE
7 STANDPIPE RISER LOCATION, COORD W/ MECH
8 CONC SHEAR WALL, SEE STRUC
9 STRIPED VEHICLE BUFFER NO PARKING ZONE
10 FLOOR DRAIN, SEE MECH & CIVIL
11 BOLLARD, MAX 7'-0" O.C., SEE CIVIL & STRUC

SHEET NOTES

12 CONC FOUNDATION WALL, SEE STRUC. W/ RAILING ABOVE IN SOME LOCATIONS, SEE ELEVATIONS
13 BOLLARD, SEE CIVIL & STRUC
14 CONC CURB WALL W/ RAILING ABOVE, SEE ELEVATIONS
15 CONC COLUMN, SEE STRUC
16 STOP BAR PAVEMENT STRIPING
17 SPEED BUMP: 10' LENGTH, ASPHALT
18 FEC, SURFACE MOUNT

SHEET NOTES

19 "NO PARKING" STENCIL, SEE 8/AP701
20 REDUCED-WIDTH EMPLOYEE PARKING ONLY SPACE. PROVIDE SIGN TO DESIGNATE TO EMPLOYEE OR AS "EMPLOYEE PARKING ONLY" UNDER SEPARATE WAYFINDING PACKAGE, TO FOLLOW

SCALE: 3/32" = 1' - 0"
0' 5'-4" 10'-8" 21'-4" 42'-8"

RECORD DRAWINGS

AS BUILT DRAWING

THIS DRAWING HAS BEEN PREPARED FROM CONTRACTOR FURNISHED INFORMATION. KUMIN ASSOCIATES, INC. MAKES NO WARRANTY, EXPRESSED OR IMPLIED, WITH REGARD TO THE ACCURACY OR COMPLETENESS OF THE INFORMATION NOW RECORDED IN THIS DRAWING. KUMIN ASSOCIATES, INC. WILL NOT ASSUME ANY LIABILITY, PROFESSIONAL OBLIGATION OR RISK THAT MIGHT OCCUR DUE TO THE RE-USE OF THIS INFORMATION.

KUMIN
ARCHITECTURE INTERIORS PLANNING
907.272.5863 FEIN 92-0120001
CA LICENSE: AC-22531

NEESE CONSTRUCTION, INC.

Childrens Dental Clinic Building

4441 Diplomacy Drive, Anchorage AK 99508
Southcentral Foundation

No.	Description	Date

Drawn By: SS
Checked By: JS
Date: 24 DEC 2018
Phase: RECORD DRAWINGS
Job No: 21519.00
SHEET TITLE: Floor Plan - Level P0

SHEET NO: AP110

1/4/2019 2:07:56 AM

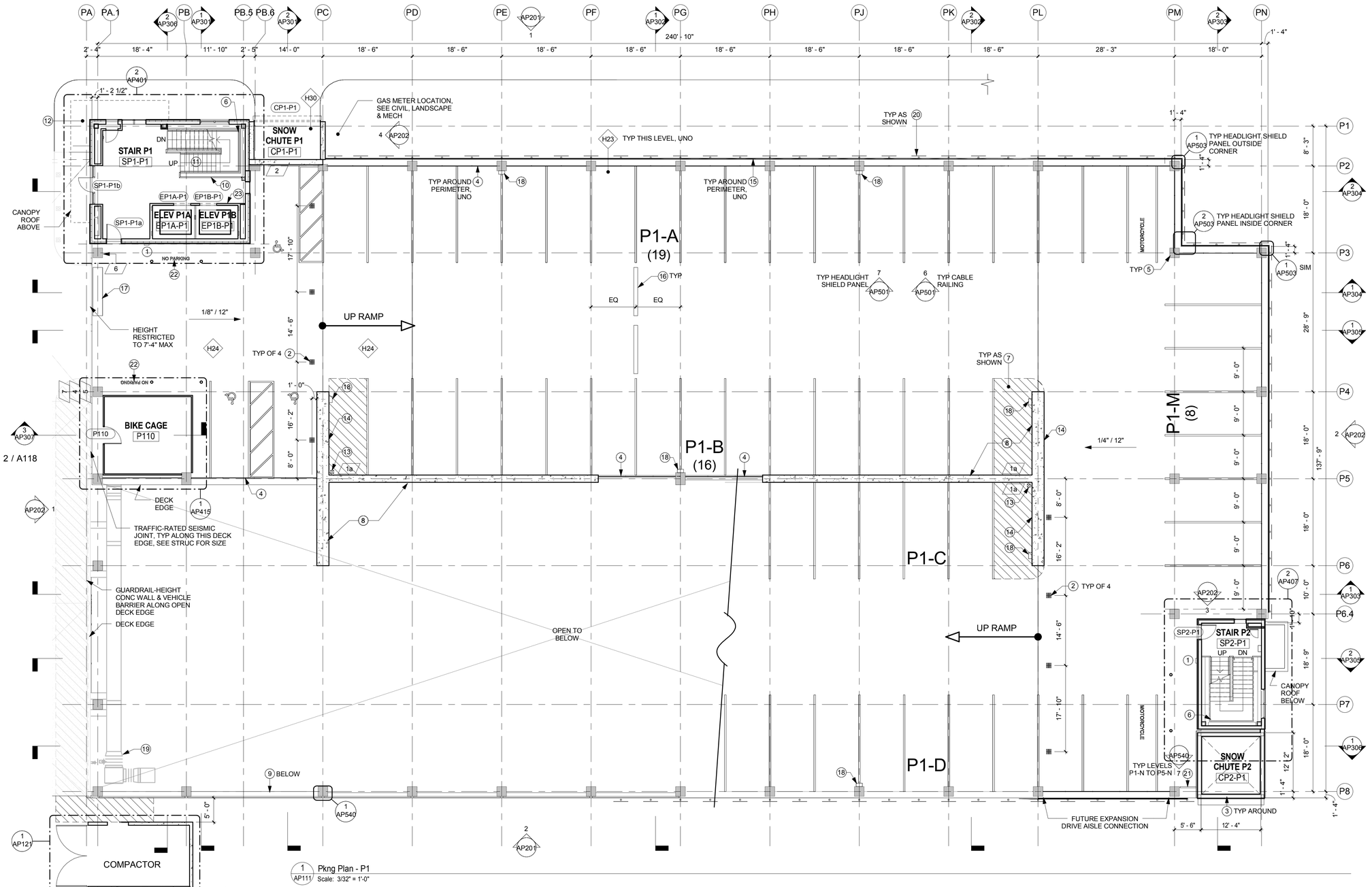

1 AP111 Pkng Plan - P1
Scale: 3/32" = 1'-0"

GENERAL FLOOR PLAN NOTES - PKNG

1. SEE SHEET AP110 FOR GENERAL FLOOR PLAN NOTES

SHEET NOTES

1 BLUE PHONE
2 FLOOR DRAIN, SEE MECH; LOCATE DRAIN AS CLOSE TO BEAM / WALL EDGE BELOW AS STRUC WILL ALLOW, TYP
3 UPPER SNOW CHUTE WALL, SEE STRUC FOR FRAMING & INT PANELS
4 STEEL CABLE VEHICLE BARRIER, SEE STRUC
5 CONC COLUMN, SEE STRUC
6 STANDPIPE RISER LOCATION, COORD W/ MECH
7 STRIPED VEHICLE BUFFER NO PARKING ZONE
8 CONC SHEAR WALL, SEE STRUC
9 CONC FOUNDATION WALL, SEE STRUC. W/ RAILING ABOVE IN SOME LOCATIONS, SEE ELEVATIONS
10 GUARDRAIL, TYP ALONG OPEN FLOOR EDGE
11 STEEL STAIR W/ HANDRAILS & GUARDRAILS EA SIDE
12 FDC, SEE CIVIL & MECH
13 RAIN LEADER VERTICAL, SEE MECH. SEE STRUC FOR DECK OPENING
14 SCUPPER THROUGH BO SHEAR WALL, SEE STRUC
15 HEADLIGHT BARRIER PANELS ON BACK SIDE OF FAÇADE SUPPORT FRAMES
16 SPEED BUMP: 10' LENGTH, RECYCLED PLASTIC, GLUE-DOWN TYPE
17 STOP BAR PAVEMENT STRIPING
18 FEC, SURFACE MOUNT
19 MECH EQUIP, SEE MECH
20 FAÇADE ASSEMBLY
21 GUARDRAIL
22 "NO PARKING" STENCIL, SEE 8/AP701
23 ELEVATOR CAB TWO-WAY COMMUNICATION PANEL

SCALE: 3/32" = 1' - 0"
0' 5'-4" 10'-8" 21'-4" 42'-8"

RECORD DRAWINGS

AS BUILT DRAWING

THIS DRAWING HAS BEEN PREPARED FROM CONTRACTOR FURNISHED INFORMATION. KUMIN ASSOCIATES, INC. MAKES NO WARRANTY, EXPRESSED OR IMPLIED, WITH REGARD TO THE ACCURACY OR COMPLETENESS OF THE INFORMATION NOW RECORDED IN THIS DRAWING. KUMIN ASSOCIATES, INC. WILL NOT ASSUME ANY LIABILITY, PROFESSIONAL OBLIGATION OR RISK THAT MIGHT OCCUR DUE TO THE RE-USE OF THIS INFORMATION.

KUMIN
ARCHITECTURE INTERIORS PLANNING
9101 ST. ELIAS STREET
ANCHORAGE, AK 99501
907-272-5383 FEDEX
CAA LICENSE: AC-00201

NEESE CONSTRUCTION, INC.

Childrens Dental Clinic Building

4441 Diplomacy Drive, Anchorage AK 99508
Southcentral Foundation

No.	Description	Date

Drawn By: SS
Checked By: JS
Date: 24 DEC 2018
Phase: RECORD DRAWINGS
Job No: 21519.00
SHEET TITLE: Floor Plan - Level P1

SHEET NO:

AP111

14/2019 2:01:41 AM

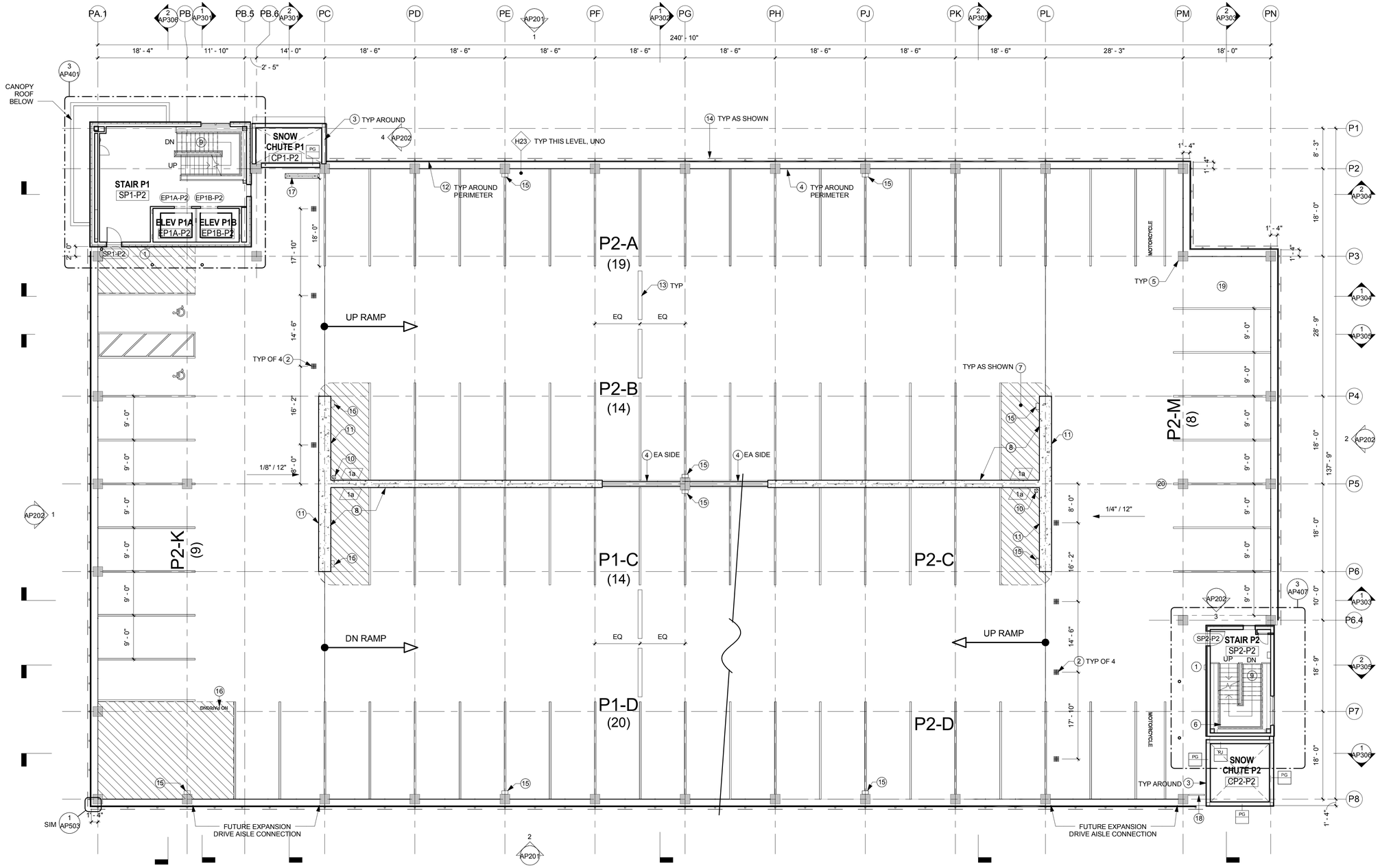

1 AP112 Pkng Plan - P2
Scale: 3/32" = 1'-0"

GENERAL FLOOR PLAN NOTES - PKNG

1. SEE SHEET AP110 FOR GENERAL FLOOR PLAN NOTES

SHEET NOTES

1 BLUE PHONE
2 FLOOR DRAIN, SEE MECH; LOCATE DRAIN AS CLOSE TO BEAM / WALL EDGE BELOW AS STRUC WILL ALLOW, TYP
3 UPPER SNOW CHUTE WALL, SEE STRUC FOR FRAMING & INT PANELS
4 STEEL CABLE VEHICLE BARRIER, SEE STRUC
5 CONC COLUMN, SEE STRUC
6 STANDPIPE RISER LOCATION, COORD W/ MECH
7 STRIPED VEHICLE BUFFER NO PARKING ZONE
8 CONC SHEAR WALL, SEE STRUC
9 STEEL STAIR W/ HANDRAILS & GUARDRAILS EA SIDE

SHEET NOTES

10 RAIN LEADER VERTICAL, SEE MECH. SEE STRUC FOR DECK OPENING
11 SCUPPER THROUGH BO SHEAR WALL, SEE STRUC
12 HEADLIGHT BARRIER PANELS ON BACK SIDE OF FAÇADE SUPPORT FRAMES
13 SPEED BUMP: 10' LENGTH, RECYCLED PLASTIC, GLUE-DOWN TYPE
14 FAÇADE ASSEMBLY
15 FEC, SURFACE MOUNT
16 "NO PARKING" STENCIL, SEE 8/AP701
17 CONC WHEEL STOP W/ DRAINAGE WEEPS. PROVIDE PER 2015 MOA MASS STANDARDS SECTION 30.09 CONCRETE PARKING BUMPERS, TYP

SHEET NOTES

18 GUARDRAIL
19 REDUCED-WIDTH EMPLOYEE PARKING ONLY SPACE, PROVIDE SIGN TO DESIGNATE TO EMPLOYEE OR AS "EMPLOYEE PARKING ONLY" UNDER SEPARATE WAYFINDING PACKAGE, TO FOLLOW
20 REDUCED-WIDTH EMPLOYEE PARKING ONLY SPACE, PROVIDE SIGN TO DESIGNATE TO EMPLOYEE OR AS "EMPLOYEE PARKING ONLY" UNDER SEPARATE WAYFINDING PACKAGE, TO FOLLOW

SCALE: 3/32" = 1' - 0"
0' 5'-4" 10'-8" 21'-4" 42'-8"

RECORD DRAWINGS

AS BUILT DRAWING
THIS DRAWING HAS BEEN PREPARED FROM CONTRACTOR FURNISHED INFORMATION. KUMIN ASSOCIATES, INC. MAKES NO WARRANTY, EXPRESSED OR IMPLIED, WITH REGARD TO THE ACCURACY OR COMPLETENESS OF THE INFORMATION NOW RECORDED IN THIS DRAWING. KUMIN ASSOCIATES, INC. WILL NOT ASSUME ANY LIABILITY, PROFESSIONAL OBLIGATION OR RISK THAT MIGHT OCCUR DUE TO THE RE-USE OF THIS INFORMATION.

KUMIN
ARCHITECTURE INTERIORS PLANNING
9101 JEWEL LAKE ROAD, ANCHORAGE, AK 99502
907.272.5915 FEIN 92-0120251
CA LICENSE: AC-25231

NEESE CONSTRUCTION, INC.

Childrens Dental Clinic Building

4441 Diplomacy Drive, Anchorage AK 99508
Southcentral Foundation

No.	Description	Date

Drawn By: SS
Checked By: JS
Date: 24 DEC 2018
Phase: RECORD DRAWINGS
Job No: 21519.00
SHEET TITLE: Floor Plan - Level P2
SHEET NO: AP112

14/2019 2:30:14:5 AM

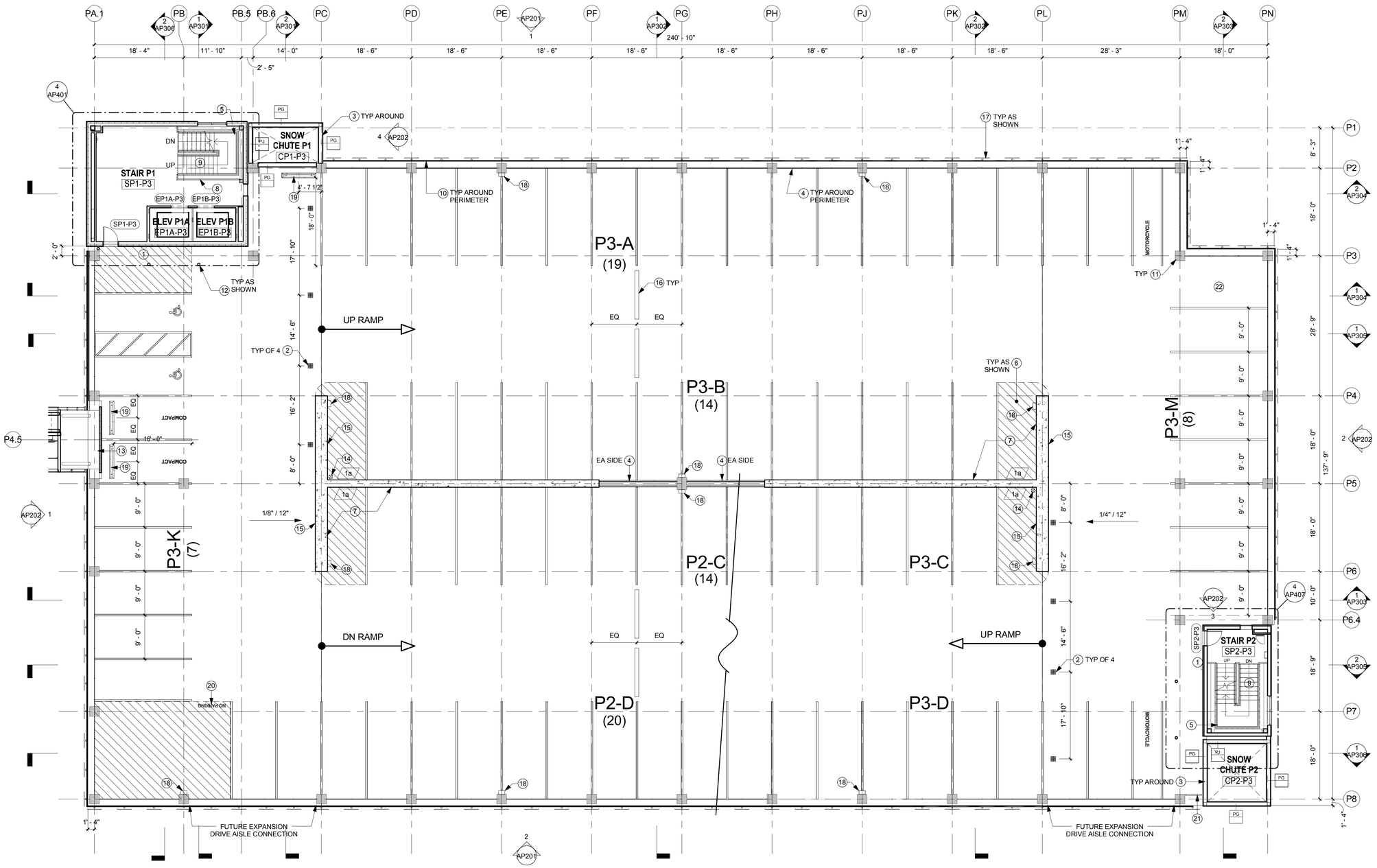

1 AP113 Pkng Plan - P3
Scale: 3/32" = 1'-0"

GENERAL FLOOR PLAN NOTES - PKNG

1. SEE SHEET AP110 FOR GENERAL FLOOR PLAN NOTES

SHEET NOTES

1 BLUE PHONE
2 FLOOR DRAIN, SEE MECH; LOCATE DRAIN AS CLOSE TO BEAM / WALL EDGE BELOW AS STRUC WILL ALLOW, TYP
3 UPPER SNOW CHUTE WALL, SEE STRUC FOR FRAMING & INT PANELS
4 STEEL CABLE VEHICLE BARRIER, SEE STRUC
5 STANDPIPE RISER LOCATION, COORD W/ MECH
6 STRIPED VEHICLE BUFFER NO PARKING ZONE
7 CONC SHEAR WALL, SEE STRUC
8 GUARDRAIL, TYP ALONG OPEN FLOOR EDGE
9 STEEL STAIR W/ HANDRAILS & GUARDRAILS EA SIDE

SHEET NOTES

10 HEADLIGHT BARRIER PANELS ON BACK SIDE OF FAÇADE SUPPORT FRAMES
11 CONC COLUMN, SEE STRUC
12 BOLLARD, SEE CIVIL & STRUC
13 LOW CONC BEAM, SEE STRUC
14 RAIN LEADER VERTICAL, SEE MECH. SEE STRUC FOR DECK OPENING
15 SCUPPER THROUGH BO SHEAR WALL, SEE STRUC
16 SPEED BUMP: 10' LENGTH, RECYCLED PLASTIC, GLUE-DOWN TYPE
17 FAÇADE ASSEMBLY
18 FEC, SURFACE MOUNT

SHEET NOTES

19 CONC WHEEL STOP W/ DRAINAGE WEEPS. PROVIDE PER 2015 MOA MASS STANDARDS SECTION 30.09 CONCRETE PARKING BUMPERS, TYP
20 "NO PARKING" STENCIL, SEE 8/AP701
21 GUARDRAIL
22 REDUCED-WIDTH EMPLOYEE PARKING ONLY SPACE, PROVIDE SIGN TO DESIGNATE TO EMPLOYEE OR AS "EMPLOYEE PARKING ONLY" UNDER SEPARATE WAYFINDING PACKAGE, TO FOLLOW

SCALE: 3/32" = 1' - 0"
0' 5'-4" 10'-8" 21'-4" 42'-8"

RECORD DRAWINGS

AS BUILT DRAWING
THIS DRAWING HAS BEEN PREPARED FROM CONTRACTOR FURNISHED INFORMATION. KUMIN ASSOCIATES, INC. MAKES NO WARRANTY, EXPRESSED OR IMPLIED, WITH REGARD TO THE ACCURACY OR COMPLETENESS OF THE INFORMATION NOW RECORDED IN THIS DRAWING. KUMIN ASSOCIATES, INC. WILL NOT ASSUME ANY LIABILITY, PROFESSIONAL OBLIGATION OR RISK THAT MIGHT OCCUR DUE TO THE RE-USE OF THIS INFORMATION.

KUMIN
ARCHITECTURE INTERIORS PLANNING
9101 JEWEL LAKE ROAD, ANCHORAGE, AK 99502
907.272.5915 FAX 272.5915
CAA LICENSE: AC-00201

NEESE CONSTRUCTION, INC.

Childrens Dental Clinic Building

4441 Diplomacy Drive, Anchorage AK 99508
Southcentral Foundation

No.	Description	Date

Drawn By: SS
Checked By: JS
Date: 24 DEC 2018
Phase: RECORD DRAWINGS
Job No: 21519.00
SHEET TITLE: Floor Plan - Level P3

SHEET NO:
AP113

14-0219-2 2/21/19 2:AM

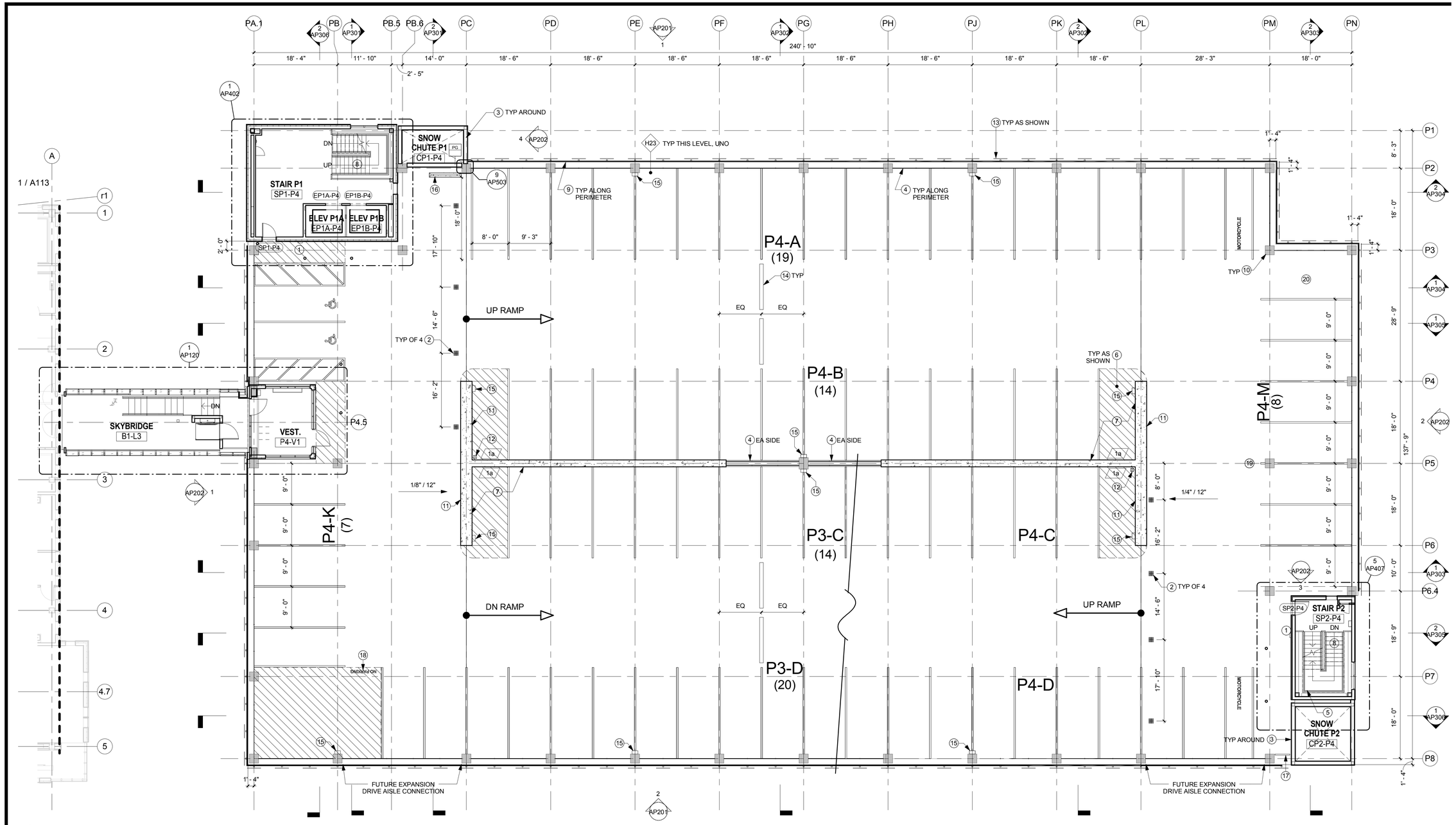

1 / AP114 Pkng Plan - P4
Scale: 3/32" = 1'-0"

GENERAL FLOOR PLAN NOTES - PKNG

1. SEE SHEET AP110 FOR GENERAL FLOOR PLAN NOTES

SHEET NOTES

1 BLUE PHONE
2 FLOOR DRAIN, SEE MECH; LOCATE DRAIN AS CLOSE TO BEAM / WALL EDGE BELOW AS STRUC WILL ALLOW, TYP
3 UPPER SNOW CHUTE WALL, SEE STRUC FOR FRAMING & INT PANELS
4 STEEL CABLE VEHICLE BARRIER, SEE STRUC
5 STANDPIPE RISER LOCATION, COORD W/ MECH
6 STRIPED VEHICLE BUFFER NO PARKING ZONE
7 CONC SHEAR WALL, SEE STRUC
8 STEEL STAIR W/ HANDRAILS & GUARDRAILS EA SIDE
9 HEADLIGHT BARRIER PANELS ON BACK SIDE OF FAÇADE SUPPORT FRAMES

SHEET NOTES

10 CONC COLUMN, SEE STRUC
11 SCUPPER THROUGH BO SHEAR WALL, SEE STRUC
12 RAIN LEADER VERTICAL, SEE MECH. SEE STRUC FOR DECK OPENING
13 FAÇADE ASSEMBLY
14 SPEED BUMP: 10' LENGTH, RECYCLED PLASTIC, GLUE-DOWN TYPE
15 FEC, SURFACE MOUNT
16 CONC WHEEL STOP W/ DRAINAGE WEEPS. PROVIDE PER 2015 MOA MASS STANDARDS SECTION 30.09 CONCRETE PARKING BUMPERS, TYP
17 GUARDRAIL

SHEET NOTES

18 "NO PARKING" STENCIL, SEE 8/AP701
19 REDUCED-WIDTH EMPLOYEE PARKING ONLY SPACE. PROVIDE SIGN TO DESIGNATE TO EMPLOYEE OR AS "EMPLOYEE PARKING ONLY" UNDER SEPARATE WAYFINDING PACKAGE, TO FOLLOW
20 REDUCED-WIDTH EMPLOYEE PARKING ONLY SPACE, PROVIDE SIGN TO DESIGNATE TO EMPLOYEE OR AS "EMPLOYEE PARKING ONLY" UNDER SEPARATE WAYFINDING PACKAGE, TO FOLLOW

SCALE: 3/32" = 1' - 0"
0' 5'-4" 10'-8" 21'-4" 42'-8"

RECORD DRAWINGS

AS BUILT DRAWING

THIS DRAWING HAS BEEN PREPARED FROM CONTRACTOR FURNISHED INFORMATION. KUMIN ASSOCIATES, INC. MAKES NO WARRANTY, EXPRESSED OR IMPLIED, WITH REGARD TO THE ACCURACY OR COMPLETENESS OF THE INFORMATION NOW RECORDED IN THIS DRAWING. KUMIN ASSOCIATES, INC. WILL NOT ASSUME ANY LIABILITY, PROFESSIONAL OBLIGATION OR RISK THAT MIGHT OCCUR DUE TO THE RE-USE OF THIS INFORMATION.

KUMIN
ARCHITECTURE INTERIORS PLANNING
9101 JEWEL LAKE ROAD, ANCHORAGE, AK 99502
907.272.5915 FAX 272.5916
CAA LICENSE: AC-00201

NEESE CONSTRUCTION, INC.

Childrens Dental Clinic Building

4441 Diplomacy Drive, Anchorage AK 99508
Southcentral Foundation

No.	Description	Date

Drawn By: SS
Checked By: JS
Date: 24 DEC 2018
Phase: RECORD DRAWINGS
Job No: 21519.00
SHEET TITLE: Floor Plan - Level P4

SHEET NO:

AP114

14/2019 2:07:15 AM

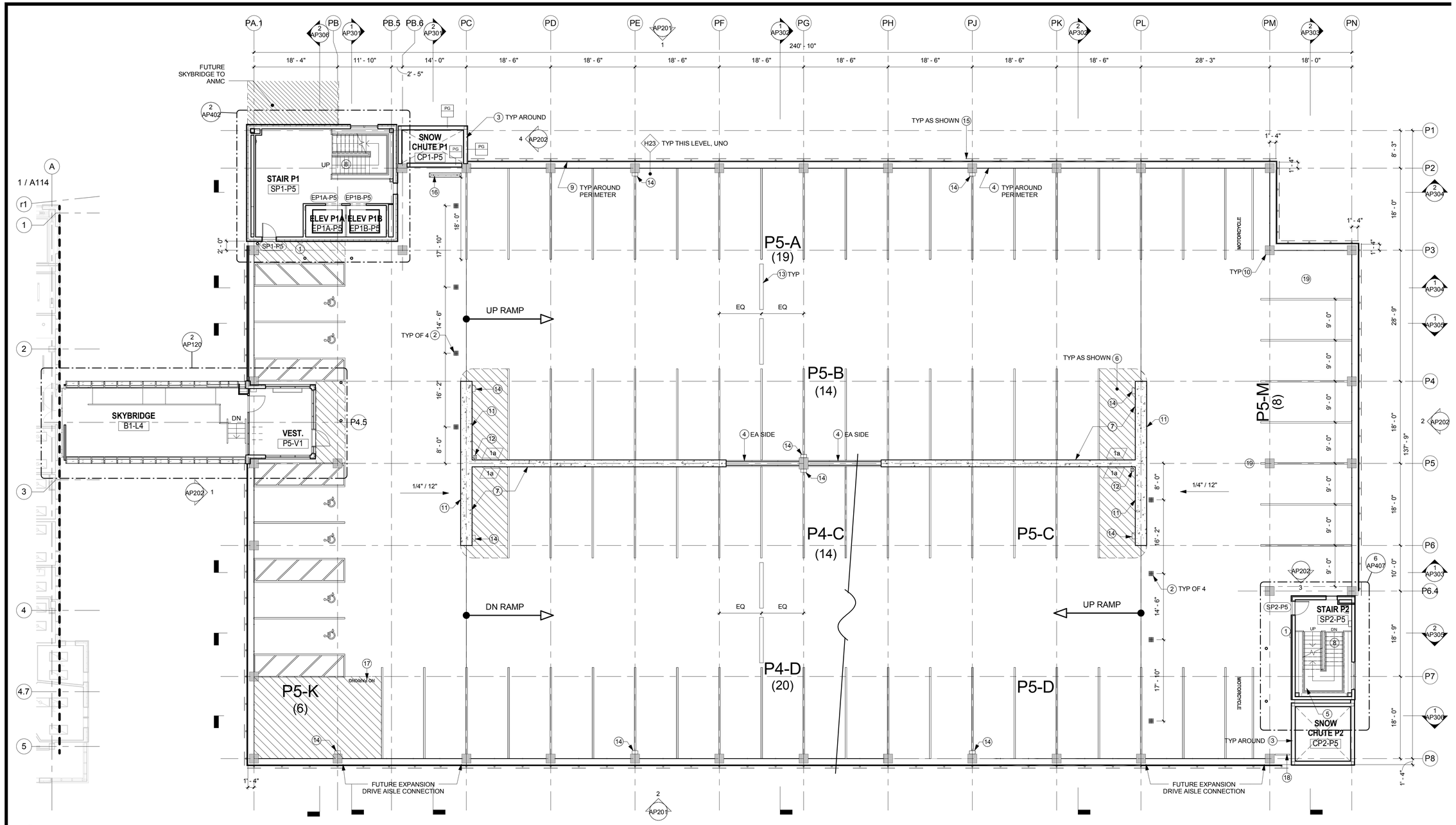

1 AP115 Pkng Plan - P5
Scale: 3/32" = 1'-0"

GENERAL FLOOR PLAN NOTES - PKNG

1. SEE SHEET AP110 FOR GENERAL FLOOR PLAN NOTES

SHEET NOTES

1 BLUE PHONE
2 FLOOR DRAIN, SEE MECH; LOCATE DRAIN AS CLOSE TO BEAM / WALL EDGE BELOW AS STRUC WILL ALLOW, TYP
3 UPPER SNOW CHUTE WALL, SEE STRUC FOR FRAMING & INT PANELS
4 STEEL CABLE VEHICLE BARRIER, SEE STRUC
5 STANDPIPE RISER LOCATION, COORD W/ MECH
6 STRIPED VEHICLE BUFFER NO PARKING ZONE
7 CONC SHEAR WALL, SEE STRUC
8 STEEL STAIR W/ HANDRAILS & GUARDRAILS EA SIDE
9 HEADLIGHT BARRIER PANELS ON BACK SIDE OF FAÇADE SUPPORT FRAMES

SHEET NOTES

10 CONC COLUMN, SEE STRUC
11 SCUPPER THROUGH BO SHEAR WALL, SEE STRUC
12 RAIN LEADER VERTICAL, SEE MECH. SEE STRUC FOR DECK OPENING
13 SPEED BUMP: 10' LENGTH, RECYCLED PLASTIC, GLUE-DOWN TYPE
14 FEC, SURFACE MOUNT
15 FAÇADE ASSEMBLY
16 CONC WHEEL STOP W/ DRAINAGE WEEPS. PROVIDE PER 2015 MOA MASS STANDARDS SECTION 30.09 CONCRETE PARKING BUMPERS, TYP
17 "NO PARKING" STENCIL, SEE 8/AP701
18 GUARDRAIL

SHEET NOTES

19 REDUCED-WIDTH EMPLOYEE PARKING ONLY SPACE. PROVIDE SIGN TO DESIGNATE TO EMPLOYEE OR AS "EMPLOYEE PARKING ONLY" UNDER SEPARATE WAYFINDING PACKAGE, TO FOLLOW

SCALE: 3/32" = 1' - 0"
0' 5'-4" 10'-8" 21'-4" 42'-8"

RECORD DRAWINGS

AS BUILT DRAWING

THIS DRAWING HAS BEEN PREPARED FROM CONTRACTOR FURNISHED INFORMATION. KUMIN ASSOCIATES, INC. MAKES NO WARRANTY, EXPRESSED OR IMPLIED, WITH REGARD TO THE ACCURACY OR COMPLETENESS OF THE INFORMATION NOW RECORDED IN THIS DRAWING. KUMIN ASSOCIATES, INC. WILL NOT ASSUME ANY LIABILITY, PROFESSIONAL OBLIGATION OR RISK THAT MIGHT OCCUR DUE TO THE RE-USE OF THIS INFORMATION.

KUMIN
ARCHITECTURE INTERIORS PLANNING
9101 JEWEL LAKE ROAD, SUITE 300
ANCHORAGE, AK 99502
907.272.5915 FEIN
CA LICENSE: AC-25231

NEESE CONSTRUCTION, INC.

Childrens Dental Clinic Building

4441 Diplomacy Drive, Anchorage AK 99508
Southcentral Foundation

No.	Description	Date

Drawn By: SS
Checked By: JS
Date: 24 DEC 2018
Phase: RECORD DRAWINGS
Job No: 21519.00
SHEET TITLE: Floor Plan - Level P5

SHEET NO:

AP115

1/4/2019 2:57:59 AM

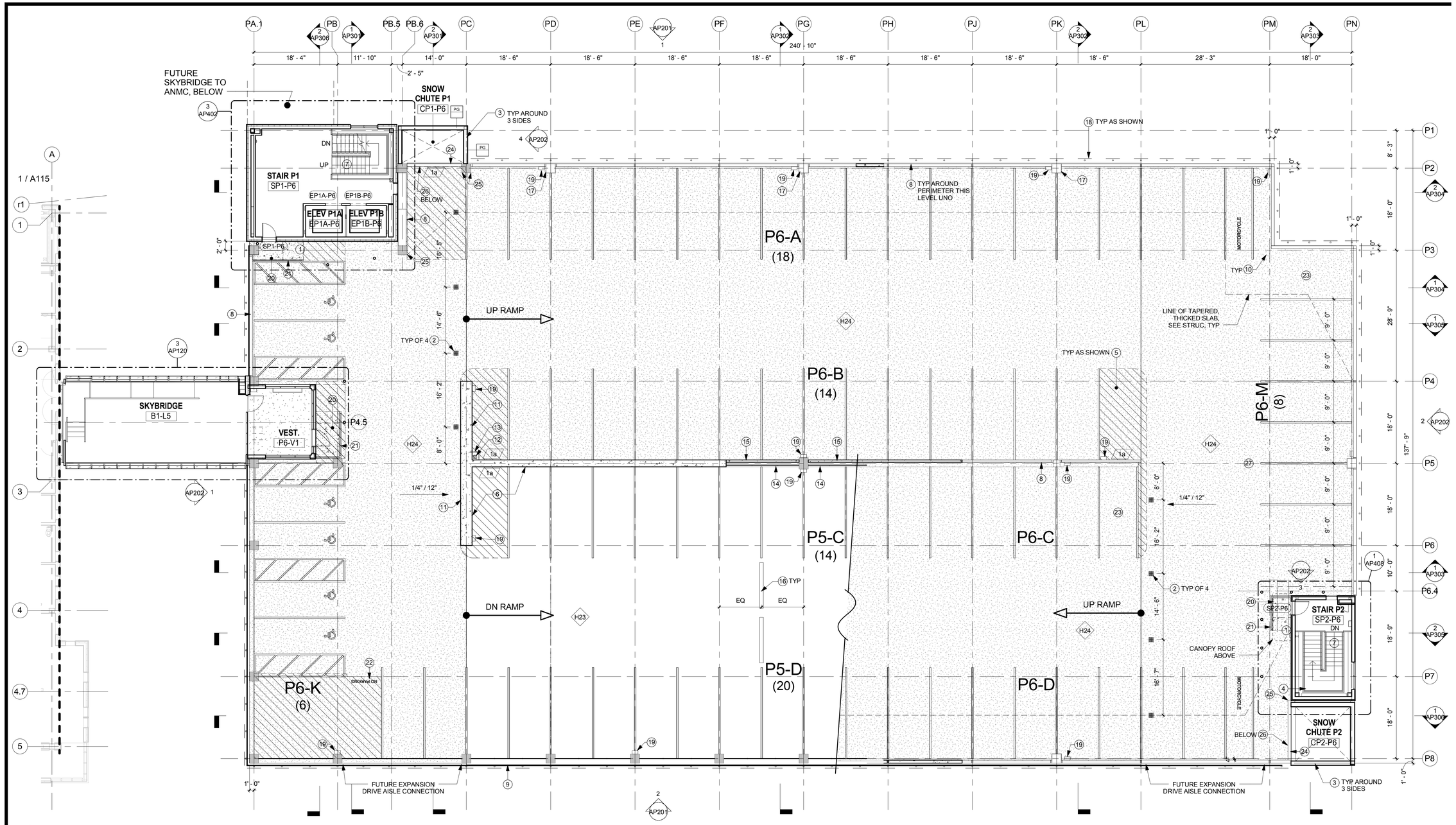

1 / AP116 Pkng Plan - P6
Scale: 3/32" = 1'-0"

GENERAL FLOOR PLAN NOTES - PKNG

1. SEE SHEET AP110 FOR GENERAL FLOOR PLAN NOTES

SHEET NOTES

1 BLUE PHONE
2 FLOOR DRAIN, SEE MECH; LOCATE DRAIN AS CLOSE TO BEAM / WALL EDGE BELOW AS STRUC WILL ALLOW, TYP
3 UPPER SNOW CHUTE WALL, SEE STRUC FOR FRAMING & INT PANELS
4 STANDPIPE RISER LOCATION, COORD W/ MECH
5 STRIPED VEHICLE BUFFER NO PARKING ZONE
6 CONC SHEAR WALL, SEE STRUC
7 STEEL STAIR W/ HANDRAILS & GUARDRAILS EA SIDE
8 MIN 3'-6" HIGH CONC WALL, SEE STRUC
9 HEADLIGHT BARRIER PANELS ON BACK SIDE OF FAÇADE SUPPORT FRAMES

SHEET NOTES

10 CONC COLUMN, SEE STRUC
11 SCUPPER THROUGH BO SHEAR WALL, SEE STRUC
12 RAIN LEADER VERTICAL, SEE MECH. SEE STRUC FOR DECK OPENING
13 GUARDRAIL AROUND RAIN LEADER VERTICAL
14 STEEL CABLE VEHICLE BARRIER, SEE STRUC
15 CONC WALL, SEE STRUC
16 SPEED BUMP: 10' LENGTH, RECYCLED PLASTIC, GLUE-DOWN TYPE
17 CONC COLUMN EXTENDED 4' ABOVE UPPER DECK AS LIGHT POLE BASE, SEE STRUC & ELEC
18 FAÇADE ASSEMBLY
19 FEC, SURFACE MOUNT

SHEET NOTES

20 OVERPOURED CONCRETE LANDING AND RAMP IN LIEU OF FUTURE ASPHALT TOPPING
21 PARTIAL HEIGHT 4" CONC CURB WALL, T.O.C. +6" ABOVE HIGHEST ADJACENT SURFACE
22 "NO PARKING" STENCIL, SEE 8/AP701
23 REDUCED-WIDTH EMPLOYEE PARKING ONLY SPACE, PROVIDE SIGN TO DESIGNATE TO EMPLOYEE OR AS "EMPLOYEE PARKING ONLY" UNDER SEPARATE WAYFINDING PACKAGE, TO FOLLOW

SHEET NOTES

24 MIN 3'-6" HIGH CONC WALL W/ PROTECTIVE GALV STL CHANNEL TOP, SEE STRUC
25 PROVIDE GALV STL ANGLE AT EXPOSED CONC COLUMN / WALL CORNER, FULL HEIGHT UNO, COORD W/ STRUC FOR ATTACHMENTS
26 AWW PLYWOOD PROTECTIVE SHEETING, COORD W/ STRUC FOR ATTACHMENTS
27 MTL FLOOR TRANSITION AT ASPHALT-CONCRETE JOINT

SCALE: 3/32" = 1' - 0"
0' 5'-4" 10'-8" 21'-4" 42'-8"

RECORD DRAWINGS

AS BUILT DRAWING
THIS DRAWING HAS BEEN PREPARED FROM CONTRACTOR FURNISHED INFORMATION. KUMIN ASSOCIATES, INC. MAKES NO WARRANTY, EXPRESSED OR IMPLIED, WITH REGARD TO THE ACCURACY OR COMPLETENESS OF THE INFORMATION NOW RECORDED IN THIS DRAWING. KUMIN ASSOCIATES, INC. WILL NOT ASSUME ANY LIABILITY, PROFESSIONAL OBLIGATION OR RISK THAT MIGHT OCCUR DUE TO THE RE-USE OF THIS INFORMATION.

KUMIN
ARCHITECTURE INTERIORS PLANNING
1000 SOUTHCENTRAL DRIVE, ANCHORAGE, AK 99507
907-272-5863 FEIN
CAA LICENSE: AC-00201

NEESE CONSTRUCTION, INC.

Childrens Dental Clinic Building

4441 Diplomacy Drive, Anchorage AK 99508
Southcentral Foundation

No.	Description	Date

Drawn By: SS
Checked By: JS
Date: 24 DEC 2018
Phase: RECORD DRAWINGS
Job No: 21519.00
SHEET TITLE: Floor Plan - Level P6

SHEET NO:
AP116

14-0201-2-2021A.A48

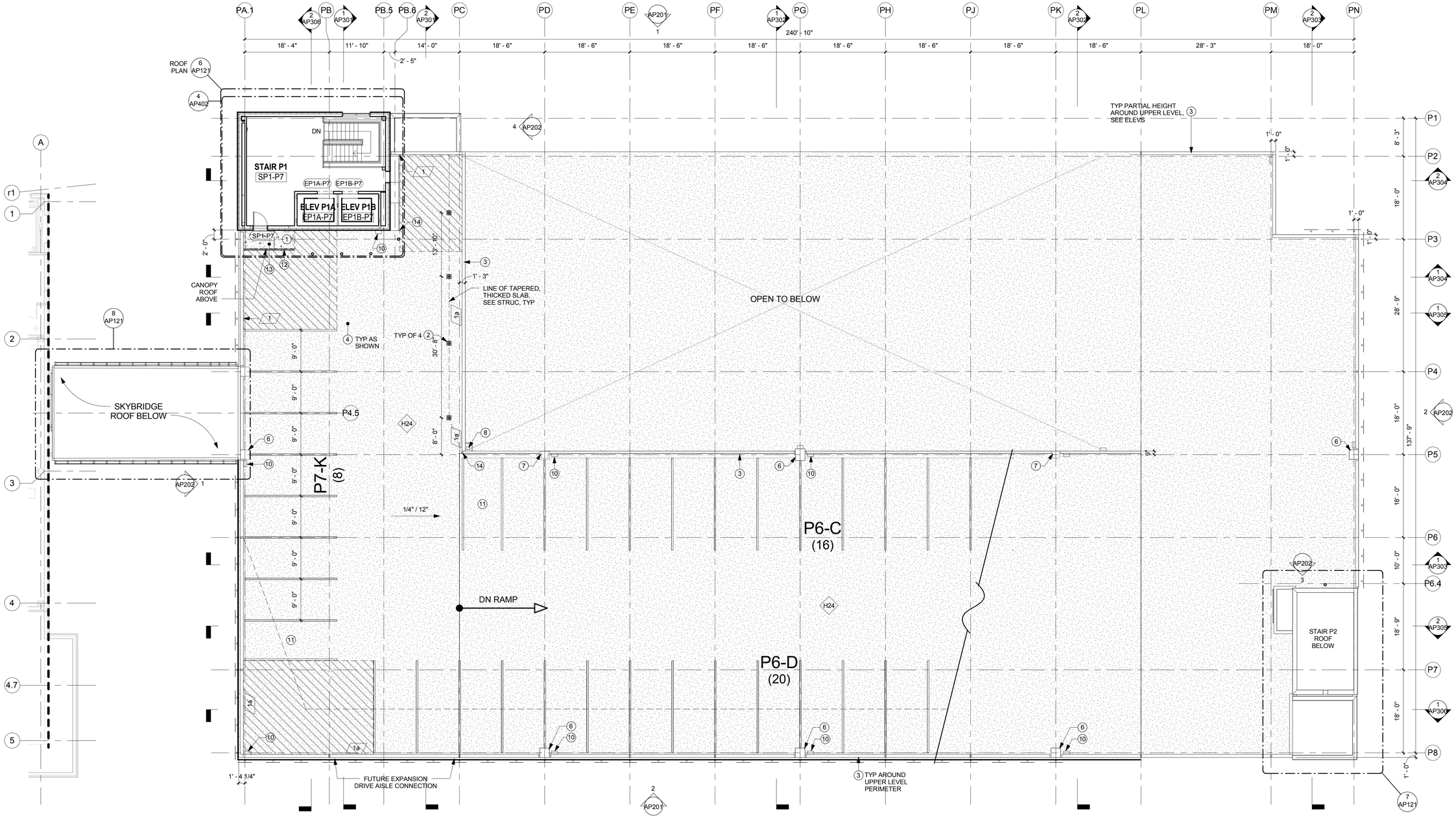

1 AP117 Pkng Plan - P7
Scale: 3/32" = 1'-0"

GENERAL FLOOR PLAN NOTES - PKNG

1. SEE SHEET AP110 FOR GENERAL FLOOR PLAN NOTES

SHEET NOTES

1 BLUE PHONE
2 FLOOR DRAIN, SEE MECH; LOCATE DRAIN AS CLOSE TO BEAM / WALL EDGE BELOW AS STRUC WILL ALLOW, TYP
3 MIN 3'-6" HIGH CONC WALL, SEE STRUC
4 STRIPED VEHICLE BUFFER NO PARKING ZONE
5 CONC SHEAR WALL, SEE STRUC
6 CONC COLUMN EXTENDED 4' ABOVE UPPER DECK AS LIGHT POLE BASE, SEE STRUC & ELEC
7 CONC PIER AS LIGHT POLE BASE, 4' ABOVE UPPER DECK, SEE STRUC & ELEC
8 RAIN LEADER VERTICAL, SEE MECH. SEE STRUC FOR DECK OPENING
9 FAÇADE ASSEMBLY

SHEET NOTES

10 FEC, SURFACE MOUNT
11 REDUCED-WIDTH EMPLOYEE PARKING ONLY SPACE, PROVIDE SIGN TO DESIGNATE TO EMPLOYEE OR AS "EMPLOYEE PARKING ONLY" UNDER SEPARATE WAYFINDING PACKAGE, TO FOLLOW
12 PARTIAL HEIGHT 4" CONC CURB WALL, T.O.C. +6" ABOVE HIGHEST ADJACENT SURFACE
13 OVERPOURED CONCRETE LANDING AND RAMP IN LIEU OF FUTURE ASPHALT TOPPING
14 PROVIDE GALV STL ANGLE AT EXPOSED CONC COLUMN / WALL CORNER, FULL HEIGHT UNO, COORD W/ STRUC FOR ATTACHMENTS

SCALE: 3/32" = 1' - 0"
0' 5'-4" 10'-8" 21'-4" 42'-8"

RECORD DRAWINGS

AS BUILT DRAWING

THIS DRAWING HAS BEEN PREPARED FROM CONTRACTOR FURNISHED INFORMATION. KUMIN ASSOCIATES, INC. MAKES NO WARRANTY, EXPRESSED OR IMPLIED, WITH REGARD TO THE ACCURACY OR COMPLETENESS OF THE INFORMATION NOW RECORDED IN THIS DRAWING. KUMIN ASSOCIATES, INC. WILL NOT ASSUME ANY LIABILITY, PROFESSIONAL OBLIGATION OR RISK THAT MIGHT OCCUR DUE TO THE RE-USE OF THIS INFORMATION.

KUMIN
ARCHITECTURE INTERIORS PLANNING
9101 JEWEL LAKE ROAD, SUITE 300
ANCHORAGE, AK 99502
907.272.5863 FEIN
CA LICENSE: AC-25231

NEESE CONSTRUCTION, INC.

Childrens Dental Clinic Building

4441 Diplomacy Drive, Anchorage AK 99508

Southcentral Foundation

No.	Description	Date

Drawn By: SS
Checked By: JS
Date: 24 DEC 2018
Phase: RECORD DRAWINGS
Job No: 21519.00
SHEET TITLE: Floor Plan - Level P7

SHEET NO:

AP117

14/2019 2:02:09 AM

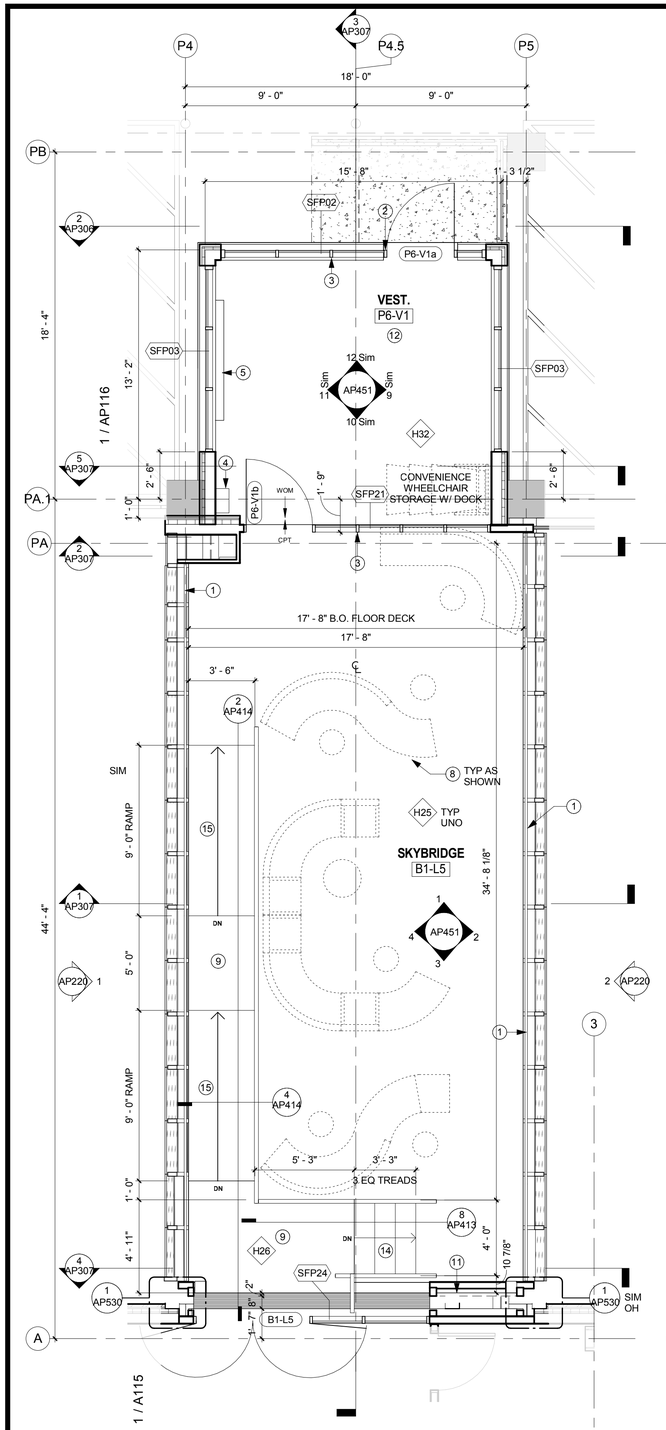

3 AP120 Skybridge Plan - Level 5 to P6
Scale: 1/4" = 1'-0"

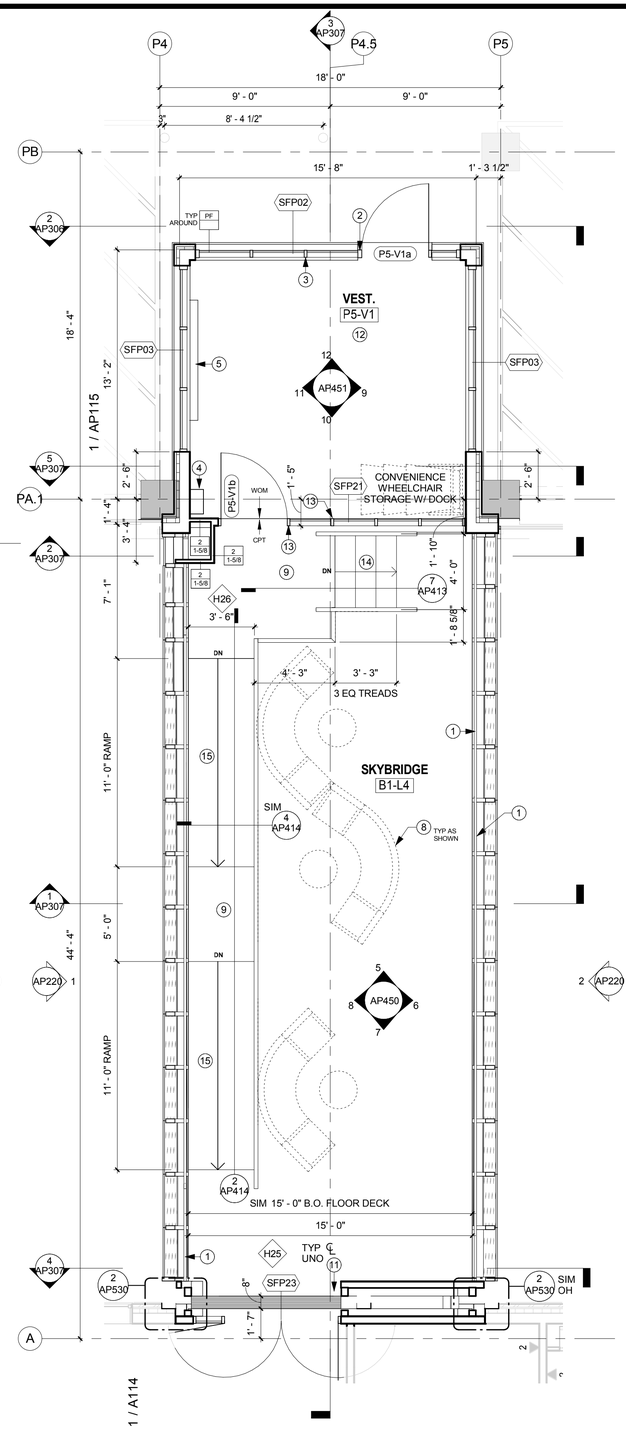

2 AP120 Skybridge Plan - Level 4 to P5
Scale: 1/4" = 1'-0"

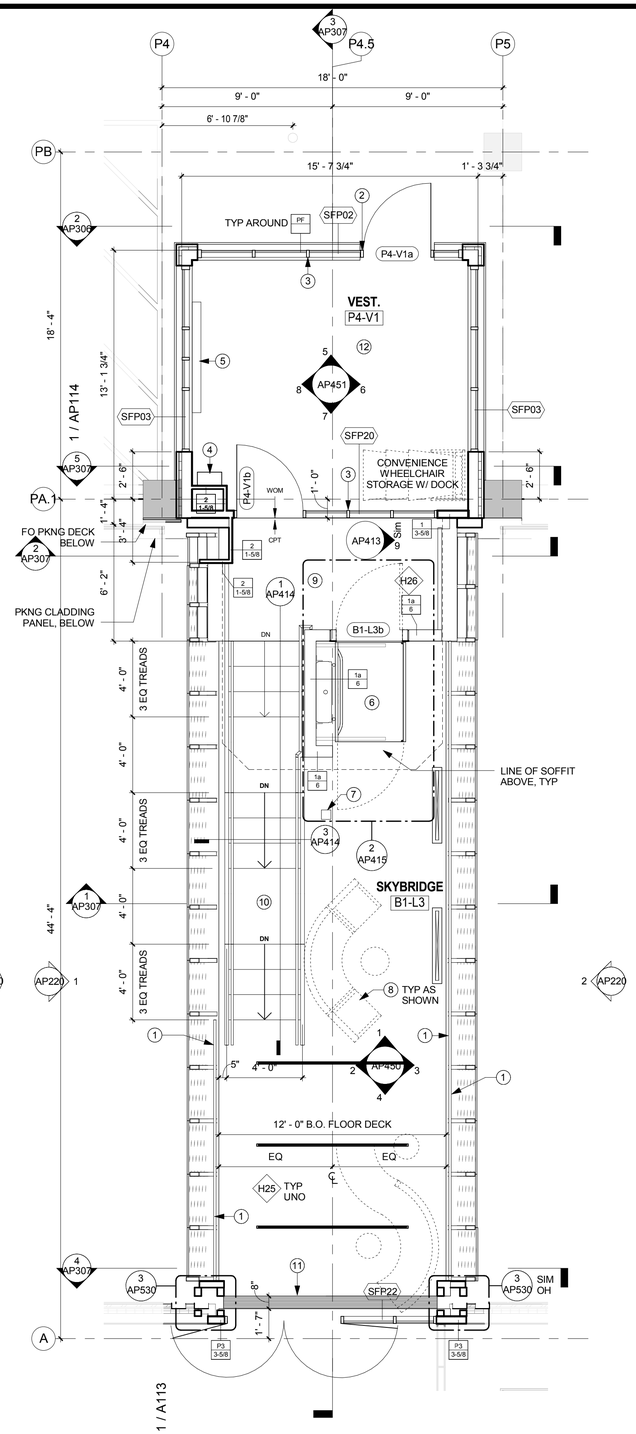

1 AP120 Skybridge Plan - Level 3 to P4
Scale: 1/4" = 1'-0"

GENERAL FLOOR PLAN NOTES - SKYBRIDGE

1. FINAL SEATING LAYOUT TO BE DETERMINED
2. CLEAR AND UNOBSTRUCTED PATH OF EGRESS TRAVEL SHALL BE PROVIDED FROM ANY POINT IN THE SKYBRIDGE TO EXITS PROVIDED FOR THAT SKYBRIDGE LEVEL
3. SEATING FURNISHINGS SHALL BE PERMANENTLY AFFIXED TO SKYBRIDGE FLOOR. NON-FIXED SEATING IS PROHIBITED AT ALL LEVELS OF SKYBRIDGE
4. FURNISHINGS SHALL BE OF CONSTRUCTION TYPE AND MATERIAL REQUIRED BY CODE FOR CLINIC BUILDING
5. SEE SHEET AP110 FOR ADDITIONAL GENERAL FLOOR PLAN NOTES

SHEET NOTES

1 CONT SSTL HANDRAIL ALONG CURTAINWALL EXCEPT AT STAIRS, STEPS AND RAMPS
2 CARD READER ON MULLION
3
4 FEC, SURFACE MOUNT
5 MECH EQUIP, SEE MECH
6 VERTICAL PLATFORM LIFT
7 VERTICAL LIFT CALL STATION ON BOLLARD
8 FIXED SEATING
9 OVERFRAMED LANDING, SEE STRUC
10 OVERFRAMED STAIRS, SEE STRUC
11 FLOOR SEISMIC JOINT COVER
12 FLOOR SLOPES MAX 2%, SEE STRUC
13 AUTO-OPERATOR BUTTON ON MULLION
14 FABRICATED METAL STEPS, SEE STRUC
15 OVERFRAMED RAMP, SEE STRUC

RECORD DRAWINGS

AS BUILT DRAWING

THIS DRAWING HAS BEEN PREPARED FROM CONTRACTOR FURNISHED INFORMATION. KUMIN ASSOCIATES, INC. MAKES NO WARRANTY, EXPRESSED OR IMPLIED, WITH REGARD TO THE ACCURACY OR COMPLETENESS OF THE INFORMATION NOW RECORDED IN THIS DRAWING. KUMIN ASSOCIATES, INC. WILL NOT ASSUME ANY LIABILITY, PROFESSIONAL OBLIGATION OR RISK THAT MIGHT OCCUR DUE TO THE RE-USE OF THIS INFORMATION.

KUMIN
ARCHITECTURE INTERIORS PLANNING
9101 JEWEL LAKE ROAD, SUITE 300
ANCHORAGE, AK 99502
907.272.5915 FEIN
CA LICENSE: AC-25231

NEESE CONSTRUCTION, INC.

Childrens Dental Clinic Building

4441 Diplomacy Drive, Anchorage AK 99508
Southcentral Foundation

No.	Description	Date

Drawn By: SS
Checked By: JS
Date: 24 DEC 2018
Phase: RECORD DRAWINGS
Job No: 21519.00
SHEET TITLE: Floor Plans - Skybridge
SHEET NO: AP120

04/2019 2:02:14 AM

GENERAL ROOF PLAN NOTES - PARKING GARAGE

1. SEE MECH FOR ALL MECHANICAL ITEMS, TYP
2. SEE SHEET AP031 FOR HORIZONTAL ASSEMBLY TYPES AND NOTES

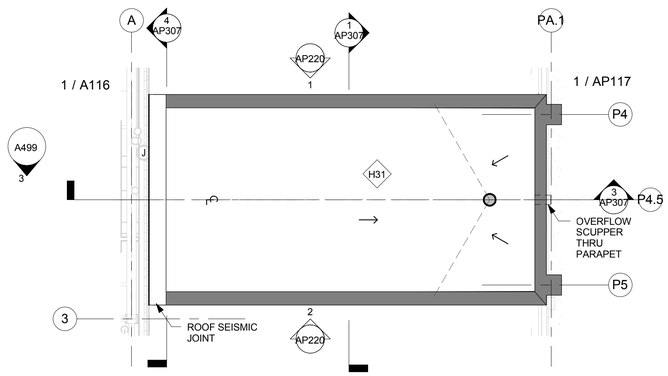

8 AP121 Skybridge Roof Plan
Scale: 1/8" = 1'-0"

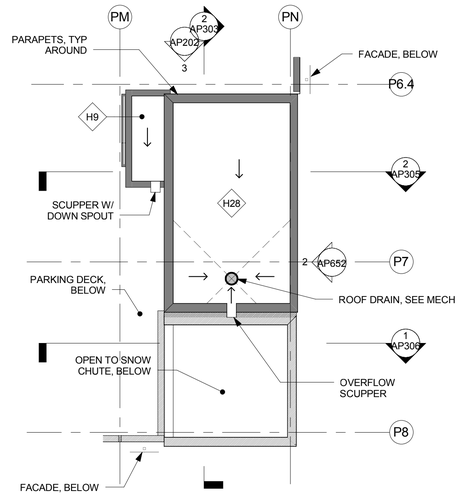

7 AP121 SP2 - Roof Plan
Scale: 1/8" = 1'-0"

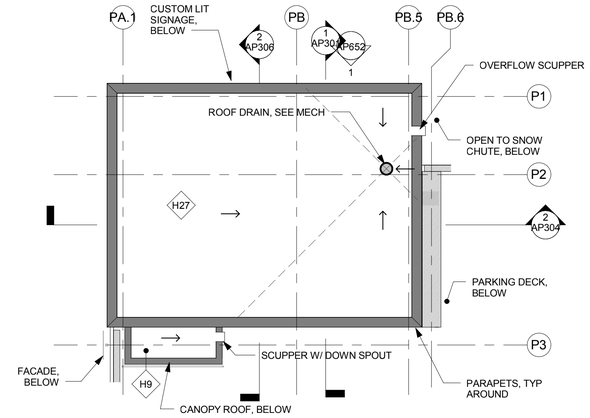

6 AP121 SP1 - Roof Plan
Scale: 1/8" = 1'-0"

SHEET NOTES

1 CONC SLAB, SEE STRUC
2 COMPACTOR ENCLOSURE, SEE STRUC

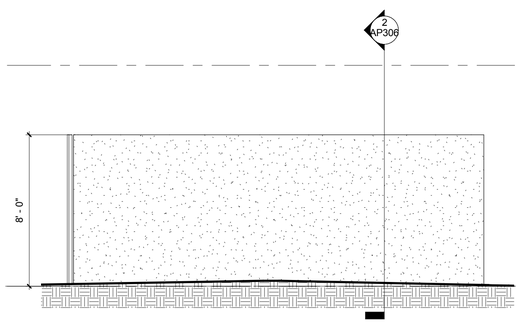

5 AP121 Compactor - East
Scale: 1/4" = 1'-0"

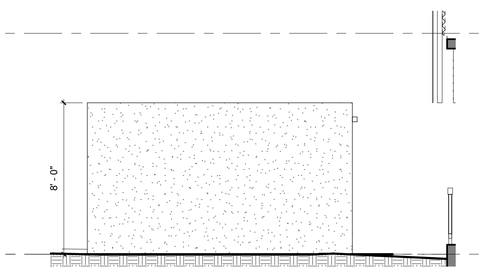

4 AP121 Compactor - North
Scale: 1/4" = 1'-0"

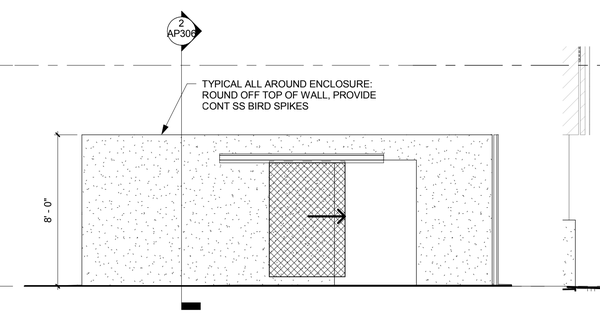

3 AP121 Compactor - West
Scale: 1/4" = 1'-0"

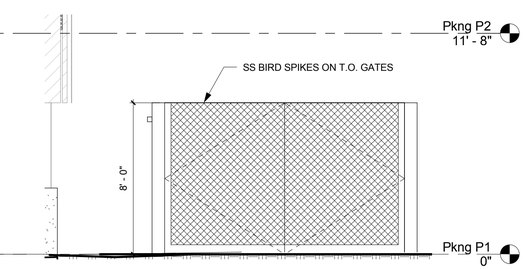

2 AP121 Compactor - South
Scale: 1/4" = 1'-0"

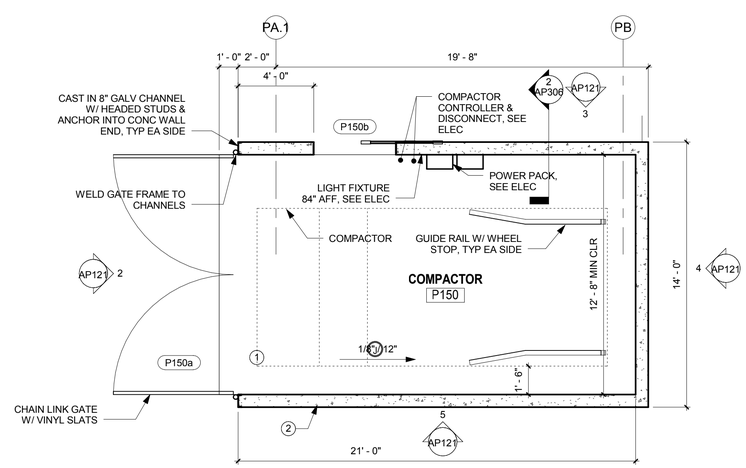

1 AP121 Compactor Enclosure - Plan
Scale: 1/4" = 1'-0"

SCALE: 1/4" = 1' - 0"
0' 2' 4' 8' 16'
SCALE: 1/8" = 1' - 0"
0' 4' 8' 16' 32'

RECORD DRAWINGS

AS BUILT DRAWING
THIS DRAWING HAS BEEN PREPARED FROM CONTRACTOR FURNISHED INFORMATION. KUMIN ASSOCIATES, INC. MAKES NO WARRANTY, EXPRESSED OR IMPLIED, WITH REGARD TO THE ACCURACY OR COMPLETENESS OF THE INFORMATION NOW RECORDED IN THIS DRAWING. KUMIN ASSOCIATES, INC. WILL NOT ASSUME ANY LIABILITY, PROFESSIONAL OBLIGATION OR RISK THAT MIGHT OCCUR DUE TO THE RE-USE OF THIS INFORMATION.

KUMIN
ARCHITECTURE INTERIORS PLANNING
1029 W. 3RD AVENUE, STE 200
ANCHORAGE, AK 99501
907.272.5863 CA LICENSE: AC2501
NEESE CONSTRUCTION, INC.

Childrens Dental Clinic Building

4441 Diplomacy Drive, Anchorage AK 99508
Southcentral Foundation

No.	Description	Date

Drawn By: SS, JL
Checked By: JS
Date: 24 DEC 2018
Phase: RECORD DRAWINGS
Job No: 21519.00
SHEET TITLE: Compactor Enclosure, Skybridge & Stair Roof Plans
SHEET NO: AP121

1/4/2019 2:02:20 AM

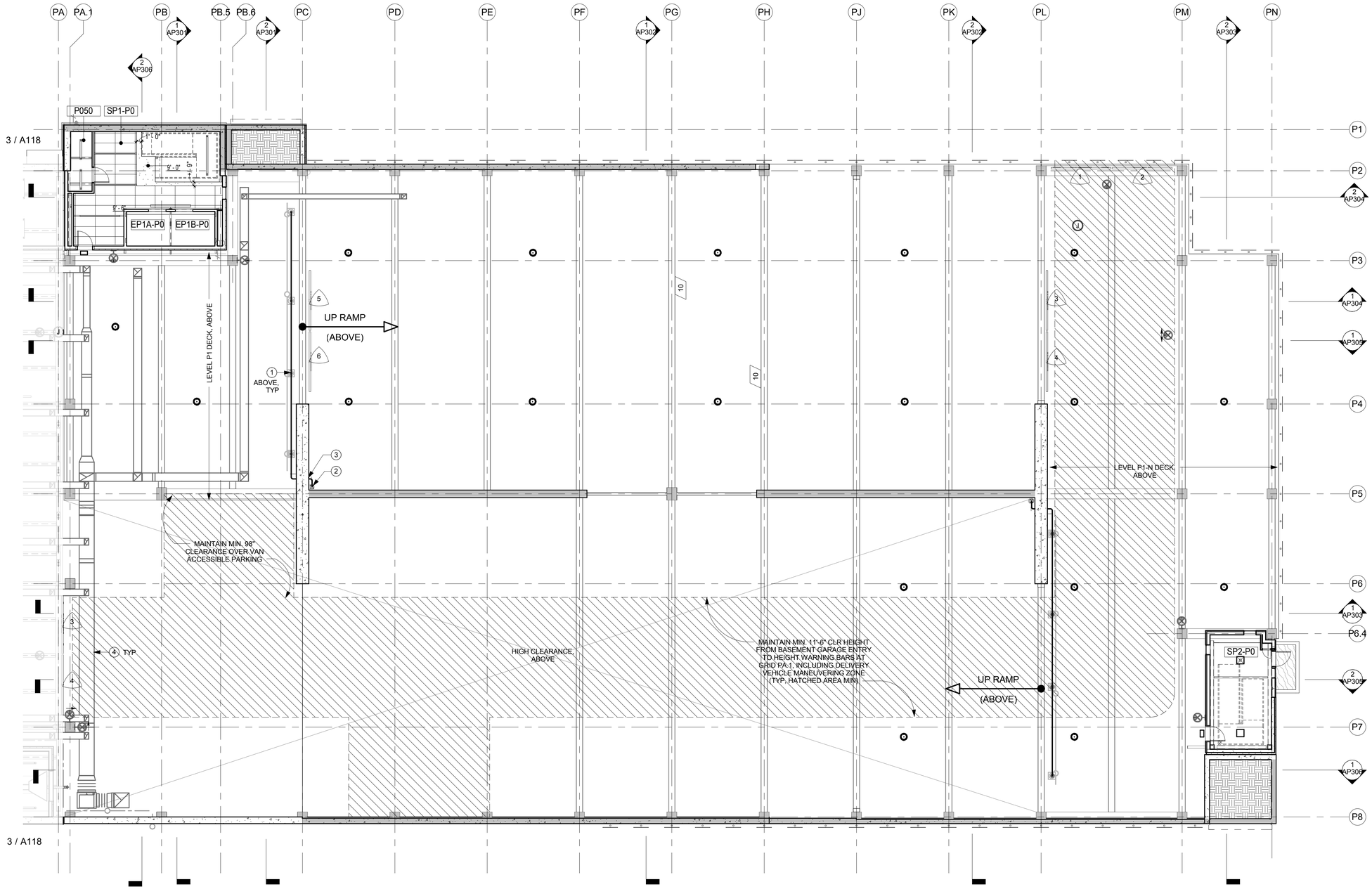

1 Pkng P0 RCP
3/32" = 1'-0"

GENERAL RCP NOTES - PARKING GARAGE

1. MECHANICAL, ELECTRICAL AND PLUMBING FIXTURES, ELEMENTS AND DEVICES SHOWN FOR REFERENCE. SEE MECH AND ELEC FOR THOSE DISCIPLINES, TYP
2. WHERE MECH OR ELEC LOCATIONS DIFFER FROM ARCHITECTURAL, ARCHITECURAL SHALL PREVAIL
3. ALL FIRE-RATED WALLS EXTEND TO UNDERSIDE OF FLOOR OR ROOF DECK ABOVE OR CONTINUE PAST FLOOR EDGE WHERE APPLICABLE, TO MAINTAIN COMPLETE RATED ASSEMBLY SEPARATIONS, TYP
4. IN AREAS WHERE CEILINGS ARE OPEN TO STRUCTURE, MOUNT LIGHTING MINIMUM 7'-6" TO BOTTOM OF FIXTURE. COORDINATE OPEN TO STRUCTURE AREAS TO ENSURE SYSTEMS AND EQUIPMENT DO NOT OCCUR BELOW 7'-6" AFF, TYP
5. FOR TYPICAL CEILING TRANSITION DETAILS, SEE SHEET AP550
6. SEE INTERIOR FINISH SCHEDULES FOR SPECIFIC CEILING MATERIAL
7. EXCEPT AT PARKING STRUCTURE BASEMENT, HOLD ALL SYSTEMS, PIPING, DEVICES, FIXTURES, SIGNAGE, ETC MIN 7'-4" ABOVE FINISHED PAVEMENT SURFACE THROUGHOUT DRIVEWAYS AND PARKING AREAS, TYP UNO
8. AT PARKING STRUCTURE BASEMENT, HOLD ALL SYSTEMS, PIPING, DEVICES, FIXTURES, SIGNAGE, ETC AT CLEAR HEIGHT ABOVE FINISHED PAVEMENT SURFACE INDICATED BY ADJACENT HEADACHE BAR CLEARANCES, TYP UNO
9. SEE ELEC FOR APPROXIMATE LOCATIONS OF SECURITY CAMERAS, TYP

REFLECTED CEILING PARKING PLAN LEGEND (NOT ALL MAY OCCUR)

- SIGN, SEE AP700
- HEIGHT WARNING BAR, SEE AP700
- GWB CEILING
- OPEN TO STRUCTURE
- 1'-0" CEILING HEIGHT (FROM LEVEL DIRECTLY BELOW)
- 200 ROOM NUMBER
- RECESSED LINEAR LIGHT FIXTURE
- PENDANT MOUNT LINEAR LIGHT FIXTURE
- WALL MOUNT LINEAR LIGHT FIXTURE
- RECESSED ROUND LIGHT FIXTURE
- PENDANT ROUND LIGHT FIXTURE
- MECHANICAL DIFFUSER, SEE MECH
- EXIT SIGN, SEE ELEC
- SURFACE MOUNT LIGHT FIXTURE

SHEET NOTES

1. FLOOR DRAIN, SEE MECH; LOCATE DRAIN AS CLOSE TO BEAM / WALL EDGE BELOW AS STRUC WILL ALLOW, TYP
2. RAIN LEADER VERTICAL, SEE MECH. SEE STRUC FOR DECK OPENING
3. RAIN LEADER HORIZONTAL THROUGH SHEAR WALL, COORD W/ MECH & STRUC
4. MECH EQUIP, SEE MECH

SCALE: 3/32" = 1' - 0"
0' 5'-4" 10'-8" 21'-4" 42'-8"

RECORD DRAWINGS

AS BUILT DRAWING

THIS DRAWING HAS BEEN PREPARED FROM CONTRACTOR FURNISHED INFORMATION. KUMIN ASSOCIATES, INC. MAKES NO WARRANTY, EXPRESSED OR IMPLIED, WITH REGARD TO THE ACCURACY OR COMPLETENESS OF THE INFORMATION NOW RECORDED IN THIS DRAWING. KUMIN ASSOCIATES, INC. WILL NOT ASSUME ANY LIABILITY, PROFESSIONAL OBLIGATION OR RISK THAT MIGHT OCCUR DUE TO THE RE-USE OF THIS INFORMATION.

KUMIN
ARCHITECTURE, INTERIORS, PLANNING
9101 ST. ELIAS STREET
ANCHORAGE, AK 99501
907-272-5863 FAX
CAA LICENSE: AC-00501

NEESE CONSTRUCTION, INC.

Childrens Dental Clinic Building

4441 Diplomacy Drive, Anchorage AK 99508

Southcentral Foundation

No.	Description	Date

Drawn By: SS
Checked By: JS
Date: 24 DEC 2018
Phase: RECORD DRAWINGS
Job No: 21519.00
SHEET TITLE: RCP - Level P0

SHEET NO:

AP150

1442019-2-DC25 AM

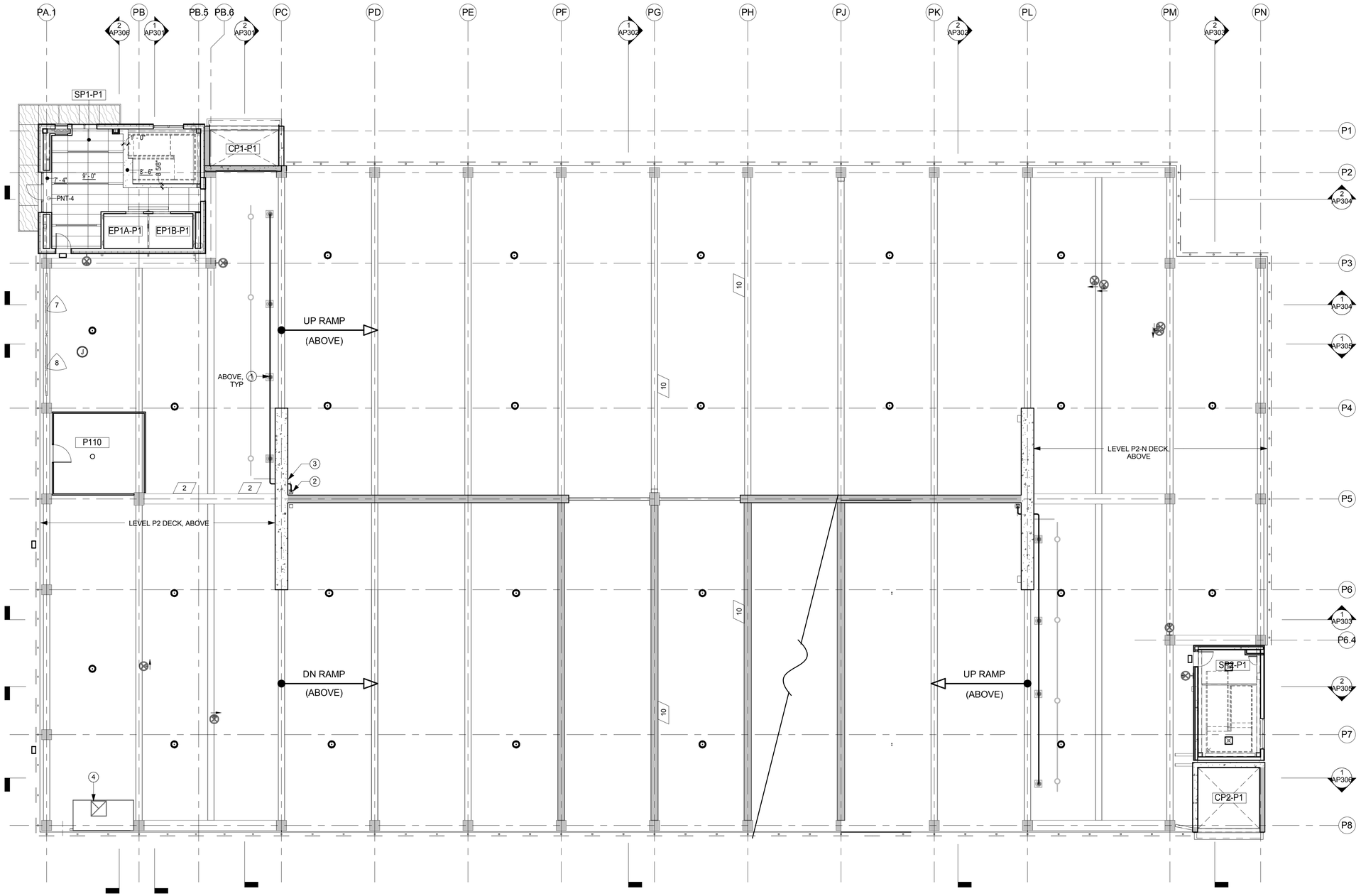

1 Pkng P1 RCP
3/32" = 1'-0"

GENERAL REFLECTED CEILING PLAN NOTES

1. SEE SHEET AP150 FOR GENERAL REFLECTED CEILING PLAN NOTES.
2. PERIMETER DIMENSION OF PHENOLIC RESIN PANELS FROM WALLS OR SOFFIT FRAMING WITHIN THE STAIR WELLS SHALL BE THREE INCHES, EXCEPT WHERE LIGHT FIXTURE OCCURS BETWEEN PANELS AND IS ADJACENT TO THE PERIMETER THAN SPACING IS PER FIXTURE DIMENSIONS.
3. REVEAL BETWEEN PHENOLIC RESIN PANELS SHALL BE 1/4" REVEAL UNLESS NOTED OTHERWISE.

REFLECTED CEILING PARKING PLAN LEGEND (NOT ALL MAY OCCUR)

- SIGN, SEE AP700
- HEIGHT WARNING BAR, SEE AP700
- GWB CEILING
- OPEN TO STRUCTURE
- 1'-0" CEILING HEIGHT (FROM LEVEL DIRECTLY BELOW)
- 200 ROOM NUMBER
- RECESSED LINEAR LIGHT FIXTURE
- PENDANT MOUNT LINEAR LIGHT FIXTURE
- WALL MOUNT LINEAR LIGHT FIXTURE
- RECESSED ROUND LIGHT FIXTURE
- PENDANT ROUND LIGHT FIXTURE
- MECHANICAL DIFFUSER, SEE MECH
- EXIT SIGN, SEE ELEC
- SURFACE MOUNT LIGHT FIXTURE

SHEET NOTES

1. FLOOR DRAIN, SEE MECH; LOCATE DRAIN AS CLOSE TO BEAM / WALL EDGE BELOW AS STRUC WILL ALLOW, TYP
2. RAIN LEADER VERTICAL, SEE MECH. SEE STRUC FOR DECK OPENING
3. RAIN LEADER HORIZONTAL THROUGH SHEAR WALL, COORD W/ MECH & STRUC
4. MECH EQUIP, SEE MECH

SCALE: 3/32" = 1' - 0"
0' 5'-4" 10'-8" 21'-4" 42'-8"

RECORD DRAWINGS

AS BUILT DRAWING

THIS DRAWING HAS BEEN PREPARED FROM CONTRACTOR FURNISHED INFORMATION. KUMIN ASSOCIATES, INC. MAKES NO WARRANTY, EXPRESSED OR IMPLIED, WITH REGARD TO THE ACCURACY OR COMPLETENESS OF THE INFORMATION NOW RECORDED IN THIS DRAWING. KUMIN ASSOCIATES, INC. WILL NOT ASSUME ANY LIABILITY, PROFESSIONAL OBLIGATION OR RISK THAT MIGHT OCCUR DUE TO THE RE-USE OF THIS INFORMATION.

KUMIN
ARCHITECTURE INTERIORS PLANNING
9101 JEWEL LAKE ROAD, SUITE 300
ANCHORAGE, AK 99502
907.272.5863 FEIN
CA LICENSE: AC-22501

NEESE CONSTRUCTION, INC.

Childrens Dental Clinic Building

4441 Diplomacy Drive, Anchorage AK 99508

Southcentral Foundation

No.	Description	Date

Drawn By: SS
Checked By: JS
Date: 24 DEC 2018
Phase: RECORD DRAWINGS
Job No: 21519.00
SHEET TITLE: RCP - Level P1
SHEET NO: AP151

04/2019 2:02:30 AM

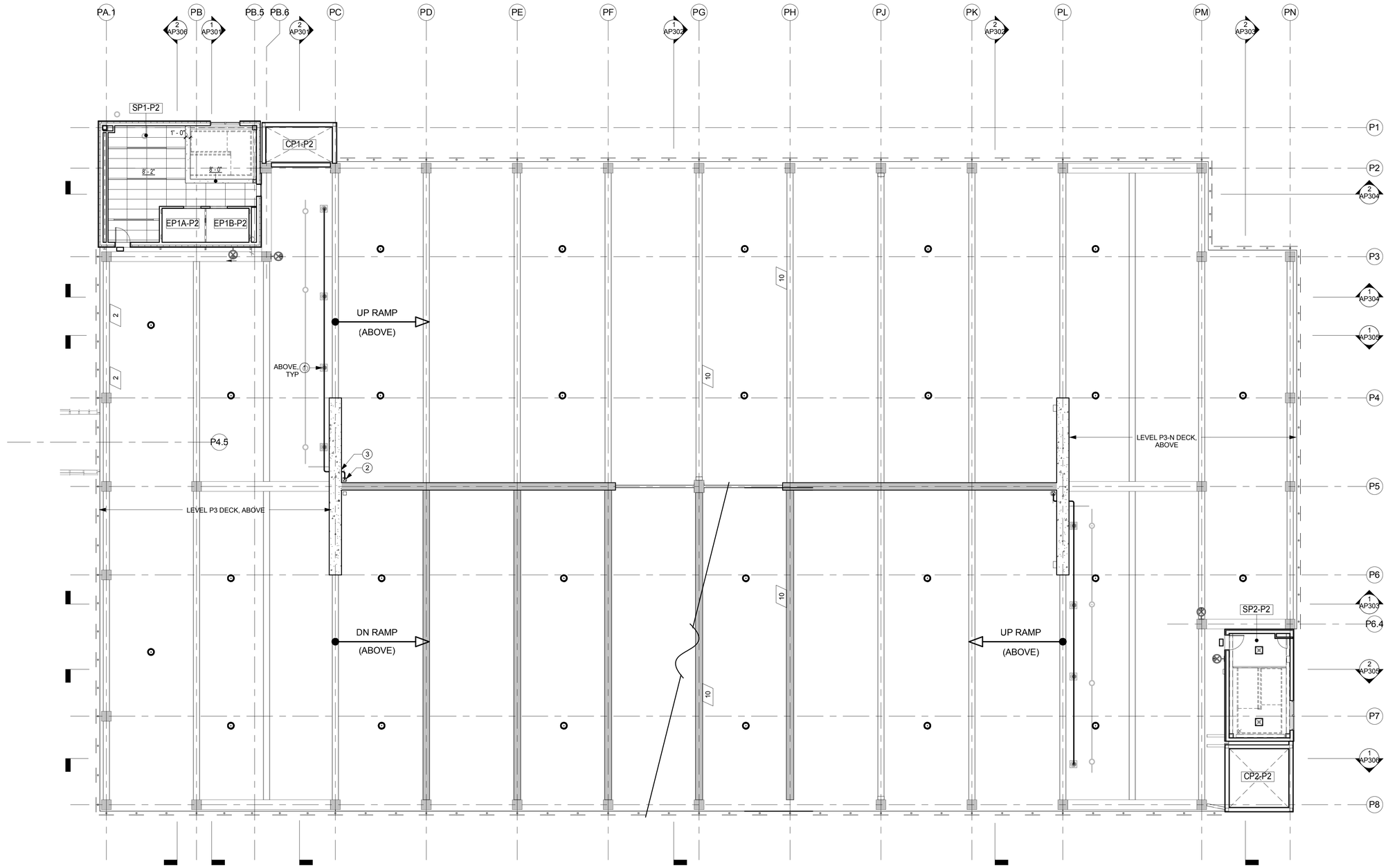

1 Pkng P2 RCP
3/32" = 1'-0"

GENERAL REFLECTED CEILING PLAN NOTES

1. SEE SHEET AP150 FOR GENERAL REFLECTED CEILING PLAN NOTES.
2. PERIMETER DIMENSION OF PHENOLIC RESIN PANELS FROM WALLS OR SOFFIT FRAMING WITHIN THE STAIR WELLS SHALL BE THREE INCHES, EXCEPT WHERE LIGHT FIXTURE OCCURS BETWEEN PANELS AND IS ADJACENT TO THE PERIMETER THAN SPACING IS PER FIXTURE DIMENSIONS.
3. REVEAL BETWEEN PHENOLIC RESIN PANELS SHALL BE 1/4" REVEAL UNLESS NOTED OTHERWISE.

REFLECTED CEILING PARKING PLAN LEGEND (NOT ALL MAY OCCUR)

- SIGN, SEE AP700
- HEIGHT WARNING BAR, SEE AP700
- GWB CEILING
- OPEN TO STRUCTURE
- 1'-0" CEILING HEIGHT (FROM LEVEL DIRECTLY BELOW)
- 200 ROOM NUMBER
- RECESSED LINEAR LIGHT FIXTURE
- PENDANT MOUNT LINEAR LIGHT FIXTURE
- WALL MOUNT LINEAR LIGHT FIXTURE
- RECESSED ROUND LIGHT FIXTURE
- PENDANT ROUND LIGHT FIXTURE
- MECHANICAL DIFFUSER, SEE MECH
- EXIT SIGN, SEE ELEC
- SURFACE MOUNT LIGHT FIXTURE

SHEET NOTES

1. FLOOR DRAIN, SEE MECH; LOCATE DRAIN AS CLOSE TO BEAM / WALL EDGE BELOW AS STRUC WILL ALLOW, TYP
2. RAIN LEADER VERTICAL, SEE MECH. SEE STRUC FOR DECK OPENING
3. RAIN LEADER HORIZONTAL THROUGH SHEAR WALL, COORD W/ MECH & STRUC

SCALE: 3/32" = 1' - 0"
0' 5'-4" 10'-8" 21'-4" 42'-8"

RECORD DRAWINGS

AS BUILT DRAWING

THIS DRAWING HAS BEEN PREPARED FROM CONTRACTOR FURNISHED INFORMATION. KUMIN ASSOCIATES, INC. MAKES NO WARRANTY, EXPRESSED OR IMPLIED, WITH REGARD TO THE ACCURACY OR COMPLETENESS OF THE INFORMATION NOW RECORDED IN THIS DRAWING. KUMIN ASSOCIATES, INC. WILL NOT ASSUME ANY LIABILITY, PROFESSIONAL OBLIGATION OR RISK THAT MIGHT OCCUR DUE TO THE RE-USE OF THIS INFORMATION.

KUMIN
ARCHITECTURE INTERIORS PLANNING
1000 SECOND AVENUE, SUITE 2000
SEATTLE, WA 98104
206.223.1616
CALIFORNIA REG. #C-22531

NEESE CONSTRUCTION, INC.

Childrens Dental Clinic Building

4441 Diplomacy Drive, Anchorage AK 99508

Southcentral Foundation

No.	Description	Date

Drawn By: SS
Checked By: JS
Date: 24 DEC 2018
Phase: RECORD DRAWINGS
Job No: 21519.00
SHEET TITLE: RCP - Level P2

SHEET NO:

AP152

04/2019 2:02:34 AM

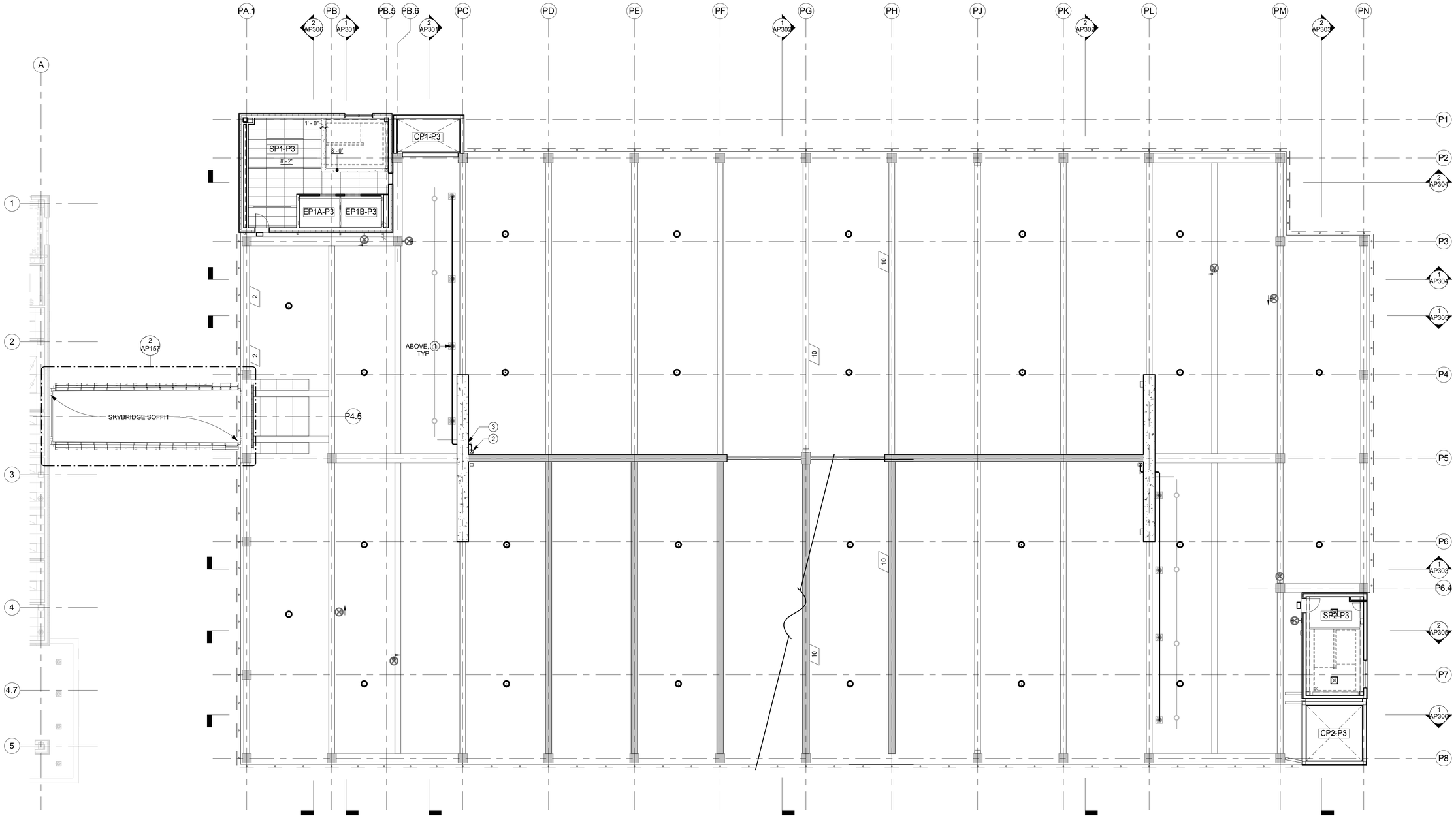

1 Pkng P3 RCP
3/32" = 1'-0"

GENERAL REFLECTED CEILING PLAN NOTES

1. SEE SHEET AP150 FOR GENERAL REFLECTED CEILING PLAN NOTES.
2. PERIMETER DIMENSION OF PHENOLIC RESIN PANELS FROM WALLS OR SOFFIT FRAMING WITHIN THE STAIR WELLS SHALL BE THREE INCHES, EXCEPT WHERE LIGHT FIXTURE OCCURS BETWEEN PANELS AND IS ADJACENT TO THE PERIMETER THAN SPACING IS PER FIXTURE DIMENSIONS.
3. REVEAL BETWEEN PHENOLIC RESIN PANELS SHALL BE 1/4" REVEAL UNLESS NOTED OTHERWISE.

REFLECTED CEILING PARKING PLAN LEGEND (NOT ALL MAY OCCUR)

- SIGN, SEE AP700
- HEIGHT WARNING BAR, SEE AP700
- GWB CEILING
- OPEN TO STRUCTURE
- 1'-0" CEILING HEIGHT (FROM LEVEL DIRECTLY BELOW)
- 200 ROOM NUMBER
- RECESSED LINEAR LIGHT FIXTURE
- PENDANT MOUNT LINEAR LIGHT FIXTURE
- WALL MOUNT LINEAR LIGHT FIXTURE
- RECESSED ROUND LIGHT FIXTURE
- PENDANT ROUND LIGHT FIXTURE
- MECHANICAL DIFFUSER, SEE MECH
- EXIT SIGN, SEE ELEC
- SURFACE MOUNT LIGHT FIXTURE

SHEET NOTES

1. FLOOR DRAIN, SEE MECH; LOCATE DRAIN AS CLOSE TO BEAM / WALL EDGE BELOW AS STRUC WILL ALLOW, TYP
2. RAIN LEADER VERTICAL, SEE MECH. SEE STRUC FOR DECK OPENING
3. RAIN LEADER HORIZONTAL THROUGH SHEAR WALL, COORD W/ MECH & STRUC

SCALE: 3/32" = 1' - 0"
0' 5'-4" 10'-8" 21'-4" 42'-8"

RECORD DRAWINGS

AS BUILT DRAWING

THIS DRAWING HAS BEEN PREPARED FROM CONTRACTOR FURNISHED INFORMATION. KUMIN ASSOCIATES, INC. MAKES NO WARRANTY, EXPRESSED OR IMPLIED, WITH REGARD TO THE ACCURACY OR COMPLETENESS OF THE INFORMATION NOW RECORDED IN THIS DRAWING. KUMIN ASSOCIATES, INC. WILL NOT ASSUME ANY LIABILITY, PROFESSIONAL OBLIGATION OR RISK THAT MIGHT OCCUR DUE TO THE RE-USE OF THIS INFORMATION.

KUMIN
ARCHITECTURE INTERIORS PLANNING
9101 JEWEL LAKE ROAD, SUITE 300
ANCHORAGE, AK 99502
907.272.5863 FAX 272.5301
CA LICENSE: AC-22531

NEESE CONSTRUCTION, INC.

Childrens Dental Clinic Building

4441 Diplomacy Drive, Anchorage AK 99508

Southcentral Foundation

No.	Description	Date

Drawn By: SS
Checked By: JS
Date: 24 DEC 2018
Phase: RECORD DRAWINGS
Job No: 21519.00
SHEET TITLE: RCP - Level P3

SHEET NO:

AP153

14-2019 2:32:40 AM

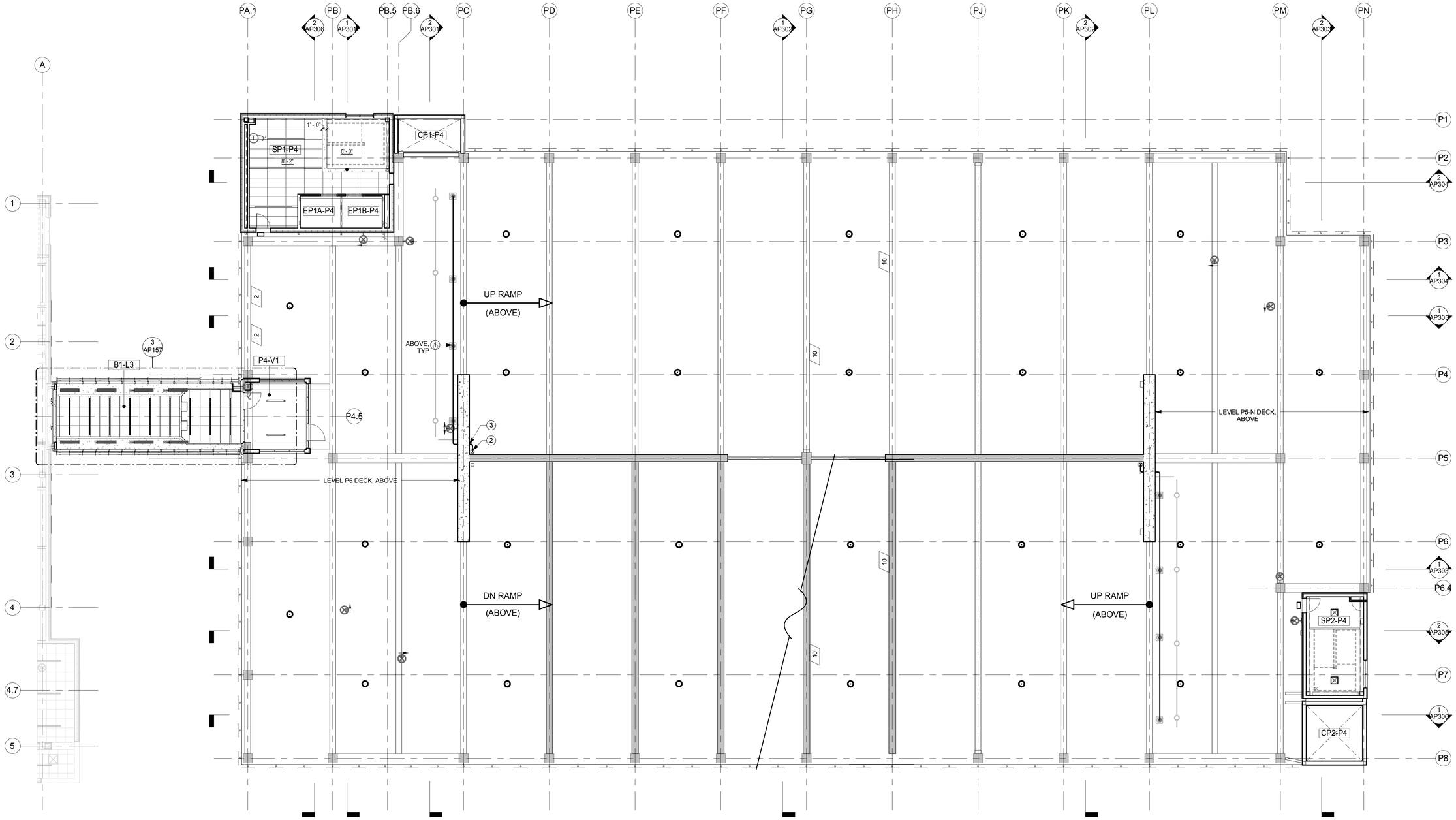

1 Pkng P4 RCP
3/32" = 1'-0"

GENERAL REFLECTED CEILING PLAN NOTES

1. SEE SHEET AP150 FOR GENERAL REFLECTED CEILING PLAN NOTES.
2. PERIMETER DIMENSION OF PHENOLIC RESIN PANELS FROM WALLS OR SOFFIT FRAMING WITHIN THE STAIR WELLS SHALL BE THREE INCHES, EXCEPT WHERE LIGHT FIXTURE OCCURS BETWEEN PANELS AND IS ADJACENT TO THE PERIMETER THAN SPACING IS PER FIXTURE DIMENSIONS.
3. REVEAL BETWEEN PHENOLIC RESIN PANELS SHALL BE 1/4" REVEAL UNLESS NOTED OTHERWISE.

REFLECTED CEILING PARKING PLAN LEGEND (NOT ALL MAY OCCUR)

- SIGN, SEE AP700
- HEIGHT WARNING BAR, SEE AP700
- GWB CEILING
- OPEN TO STRUCTURE
- 1'-0" CEILING HEIGHT (FROM LEVEL DIRECTLY BELOW)
- 200 ROOM NUMBER
- RECESSED LINEAR LIGHT FIXTURE
- PENDANT MOUNT LINEAR LIGHT FIXTURE
- WALL MOUNT LINEAR LIGHT FIXTURE
- RECESSED ROUND LIGHT FIXTURE
- PENDANT ROUND LIGHT FIXTURE
- MECHANICAL DIFFUSER, SEE MECH
- EXIT SIGN, SEE ELEC
- SURFACE MOUNT LIGHT FIXTURE

SHEET NOTES

1. FLOOR DRAIN, SEE MECH; LOCATE DRAIN AS CLOSE TO BEAM / WALL EDGE BELOW AS STRUC WILL ALLOW, TYP
2. RAIN LEADER VERTICAL, SEE MECH. SEE STRUC FOR DECK OPENING
3. RAIN LEADER HORIZONTAL THROUGH SHEAR WALL, COORD W/ MECH & STRUC

SCALE: 3/32" = 1' - 0"
0' 5'-4" 10'-8" 21'-4" 42'-8"

RECORD DRAWINGS

AS BUILT DRAWING

THIS DRAWING HAS BEEN PREPARED FROM CONTRACTOR FURNISHED INFORMATION. KUMIN ASSOCIATES, INC. MAKES NO WARRANTY, EXPRESSED OR IMPLIED, WITH REGARD TO THE ACCURACY OR COMPLETENESS OF THE INFORMATION NOW RECORDED IN THIS DRAWING. KUMIN ASSOCIATES, INC. WILL NOT ASSUME ANY LIABILITY, PROFESSIONAL OBLIGATION OR RISK THAT MIGHT OCCUR DUE TO THE RE-USE OF THIS INFORMATION.

KUMIN
ARCHITECTURE INTERIORS PLANNING
9101 JEWEL LAKE ROAD, ANCHORAGE, AK 99502
907.272.5863 FAX 272.5301
CA LICENSE: AC-22231

NEESE CONSTRUCTION, INC.

Childrens Dental Clinic Building

4441 Diplomacy Drive, Anchorage AK 99508

Southcentral Foundation

No.	Description	Date

Drawn By: SS
Checked By: JS
Date: 24 DEC 2018
Phase: RECORD DRAWINGS
Job No: 21519.00
SHEET TITLE: RCP - Level P4

SHEET NO:

AP154

1/4/2019 2:02:49 AM

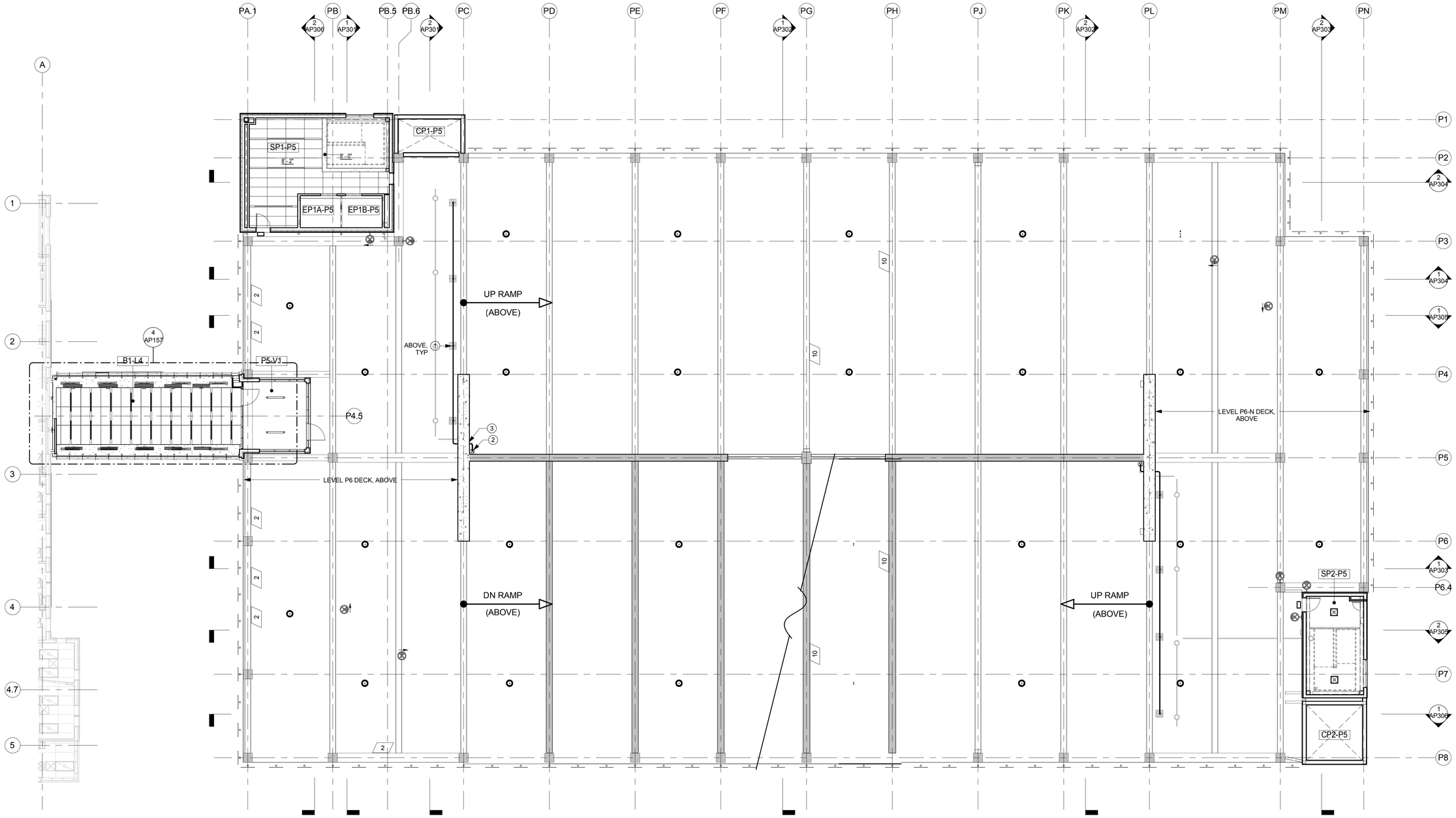

1 Pkng P5 RCP
3/32" = 1'-0"

GENERAL REFLECTED CEILING PLAN NOTES

1. SEE SHEET AP150 FOR GENERAL REFLECTED CEILING PLAN NOTES.
2. PERIMETER DIMENSION OF PHENOLIC RESIN PANELS FROM WALLS OR SOFFIT FRAMING WITHIN THE STAIR WELLS SHALL BE THREE INCHES, EXCEPT WHERE LIGHT FIXTURE OCCURS BETWEEN PANELS AND IS ADJACENT TO THE PERIMETER THAN SPACING IS PER FIXTURE DIMENSIONS.
3. REVEAL BETWEEN PHENOLIC RESIN PANELS SHALL BE 1/4" REVEAL UNLESS NOTED OTHERWISE.

REFLECTED CEILING PARKING PLAN LEGEND (NOT ALL MAY OCCUR)

- SIGN, SEE AP700
- HEIGHT WARNING BAR, SEE AP700
- GWB CEILING
- OPEN TO STRUCTURE
- 1'-0" CEILING HEIGHT (FROM LEVEL DIRECTLY BELOW)
- 200 ROOM NUMBER
- RECESSED LINEAR LIGHT FIXTURE
- PENDANT MOUNT LINEAR LIGHT FIXTURE
- WALL MOUNT LINEAR LIGHT FIXTURE
- RECESSED ROUND LIGHT FIXTURE
- PENDANT ROUND LIGHT FIXTURE
- MECHANICAL DIFFUSER, SEE MECH
- EXIT SIGN, SEE ELEC
- SURFACE MOUNT LIGHT FIXTURE

SHEET NOTES

1. FLOOR DRAIN, SEE MECH; LOCATE DRAIN AS CLOSE TO BEAM / WALL EDGE BELOW AS STRUC WILL ALLOW, TYP
2. RAIN LEADER VERTICAL, SEE MECH. SEE STRUC FOR DECK OPENING
3. RAIN LEADER HORIZONTAL THROUGH SHEAR WALL, COORD W/ MECH & STRUC

SCALE: 3/32" = 1' - 0"
0' 5'-4" 10'-8" 21'-4" 42'-8"

RECORD DRAWINGS

AS BUILT DRAWING
THIS DRAWING HAS BEEN PREPARED FROM CONTRACTOR FURNISHED INFORMATION. KUMIN ASSOCIATES, INC. MAKES NO WARRANTY, EXPRESSED OR IMPLIED, WITH REGARD TO THE ACCURACY OR COMPLETENESS OF THE INFORMATION NOW RECORDED IN THIS DRAWING. KUMIN ASSOCIATES, INC. WILL NOT ASSUME ANY LIABILITY, PROFESSIONAL OBLIGATION OR RISK THAT MIGHT OCCUR DUE TO THE RE-USE OF THIS INFORMATION.

KUMIN
ARCHITECTURE INTERIORS PLANNING
9101 JEWEL LAKE ROAD, SUITE 300
ANCHORAGE, AK 99502
907.272.5863 FEIN
CA LICENSE: AC-25231

NEESE CONSTRUCTION, INC.

Childrens Dental Clinic Building

4441 Diplomacy Drive, Anchorage AK 99508

Southcentral Foundation

No.	Description	Date

Drawn By: SS
Checked By: JS
Date: 24 DEC 2018
Phase: RECORD DRAWINGS
Job No: 21519.00
SHEET TITLE: RCP - Level P5
SHEET NO:

AP155

1/4/2019 2:02:51 AM

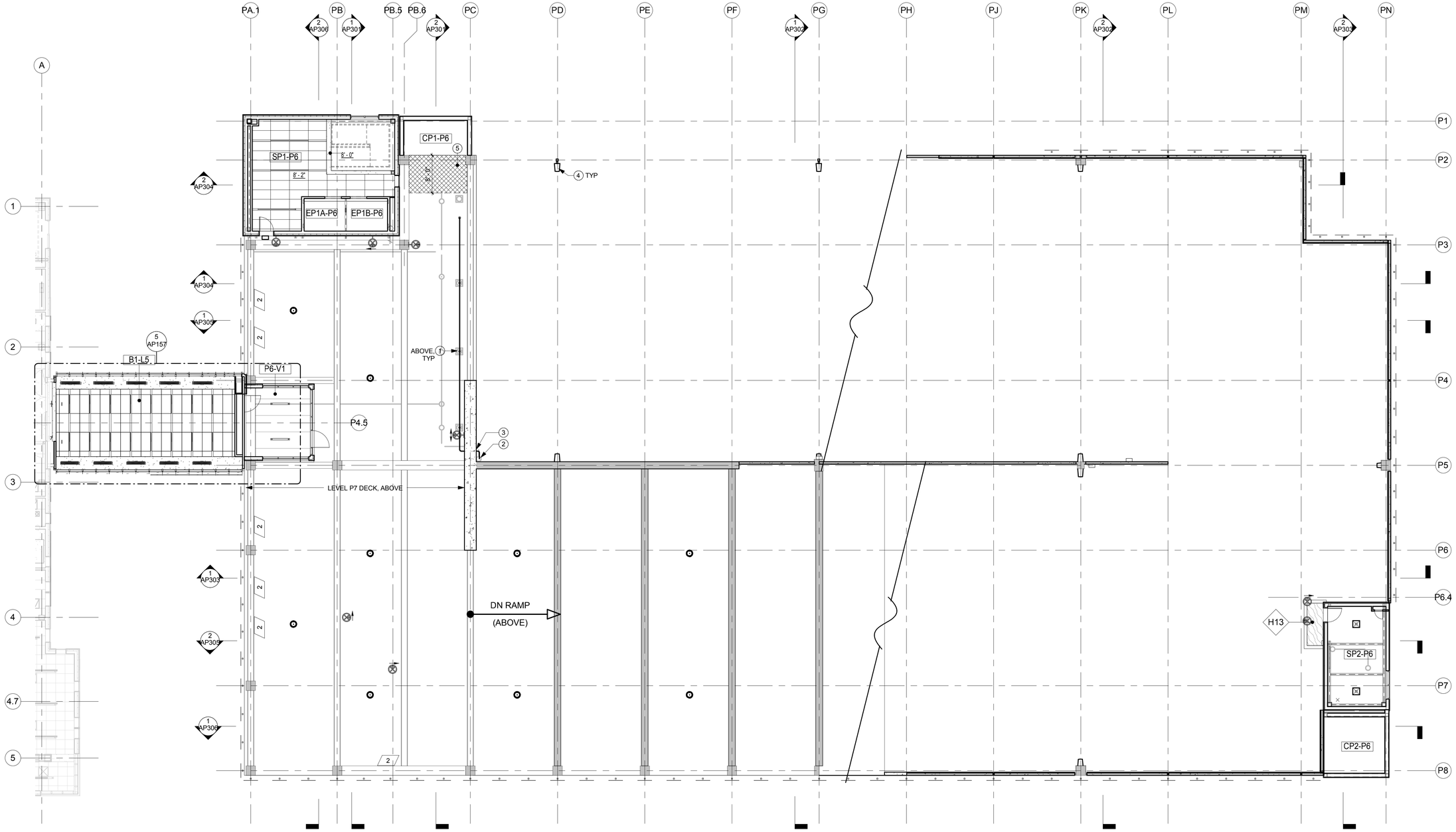

1 Pkng P6 RCP
3/32" = 1'-0"

GENERAL BUILDING SECTION NOTES

1. SEE SHEET A301 FOR GENERAL BUILDING SECTION NOTES

REFLECTED CEILING PARKING PLAN LEGEND (NOT ALL MAY OCCUR)

- SIGN, SEE AP700
- HEIGHT WARNING BAR, SEE AP700
- GWB CEILING
- OPEN TO STRUCTURE
- 1'-0" CEILING HEIGHT (FROM LEVEL DIRECTLY BELOW)
- 200 ROOM NUMBER
- RECESSED LINEAR LIGHT FIXTURE
- PENDANT MOUNT LINEAR LIGHT FIXTURE
- WALL MOUNT LINEAR LIGHT FIXTURE
- RECESSED ROUND LIGHT FIXTURE
- PENDANT ROUND LIGHT FIXTURE
- MECHANICAL DIFFUSER, SEE MECH
- EXIT SIGN, SEE ELEC
- SURFACE MOUNT LIGHT FIXTURE

SHEET NOTES

1. FLOOR DRAIN, SEE MECH; LOCATE DRAIN AS CLOSE TO BEAM / WALL EDGE BELOW AS STRUC WILL ALLOW, TYP
2. RAIN LEADER VERTICAL, SEE MECH. SEE STRUC FOR DECK OPENING
3. RAIN LEADER HORIZONTAL THROUGH SHEAR WALL, COORD W/ MECH & STRUC
4. LIGHT POLE, SEE ELEC
5. AWW PLYWOOD PROTECTIVE SHEETING, COORD W/ STRUC FOR ATTACHMENTS

SCALE: 3/32" = 1' - 0"
0' 5'-4" 10'-8" 21'-4" 42'-8"

RECORD DRAWINGS

AS BUILT DRAWING

THIS DRAWING HAS BEEN PREPARED FROM CONTRACTOR FURNISHED INFORMATION. KUMIN ASSOCIATES, INC. MAKES NO WARRANTY, EXPRESSED OR IMPLIED, WITH REGARD TO THE ACCURACY OR COMPLETENESS OF THE INFORMATION NOW RECORDED IN THIS DRAWING. KUMIN ASSOCIATES, INC. WILL NOT ASSUME ANY LIABILITY, PROFESSIONAL OBLIGATION OR RISK THAT MIGHT OCCUR DUE TO THE RE-USE OF THIS INFORMATION.

KUMIN
ARCHITECTURE INTERIORS PLANNING
1049 W 5th AVE, SUITE 200
ANCHORAGE, AK 99501
907.272.5863 CA LICENSE: AC-25251

NEESE CONSTRUCTION, INC.

Childrens Dental Clinic Building

4441 Diplomacy Drive, Anchorage AK 99508

Southcentral Foundation

No.	Description	Date

Drawn By: SS
Checked By: JS
Date: 24 DEC 2018
Phase: RECORD DRAWINGS
Job No: 21519.00
SHEET TITLE: RCP - Level P6

SHEET NO:

AP156

1/4/2019 2:02:57 AM

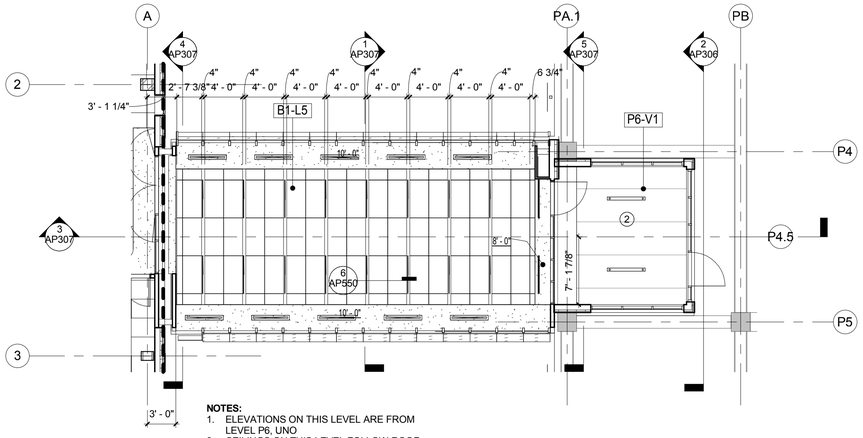

NOTES:
1. ELEVATIONS ON THIS LEVEL ARE FROM LEVEL P6, UNO
2. CEILINGS ON THIS LEVEL FOLLOW ROOF DECK SLOPE, TYP UNO
3. PERIMETER SOFFITS AT GLAZING ARE 4" BELOW CENTER CEILING LEVEL AND FOLLOW SLOPE OF CENTER CEILING

5 / AP157 Skybridge RCP - Level 5 to P6
Scale: 1/8" = 1'-0"

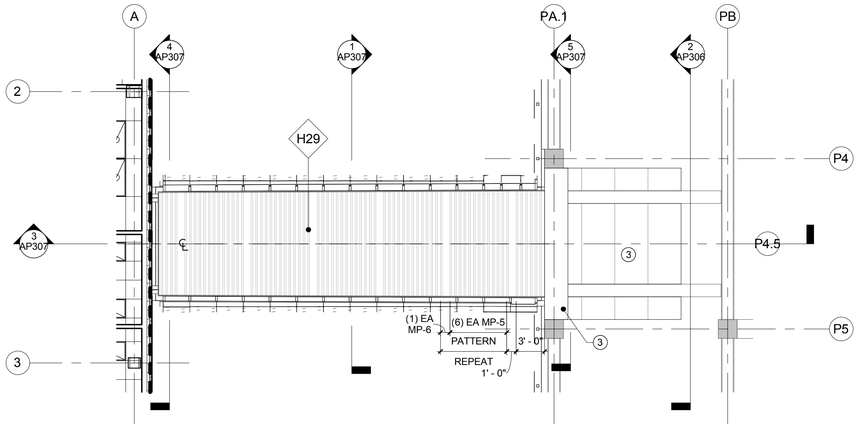

2 / AP157 Skybridge RCP - Level 2 to P3
Scale: 1/8" = 1'-0"

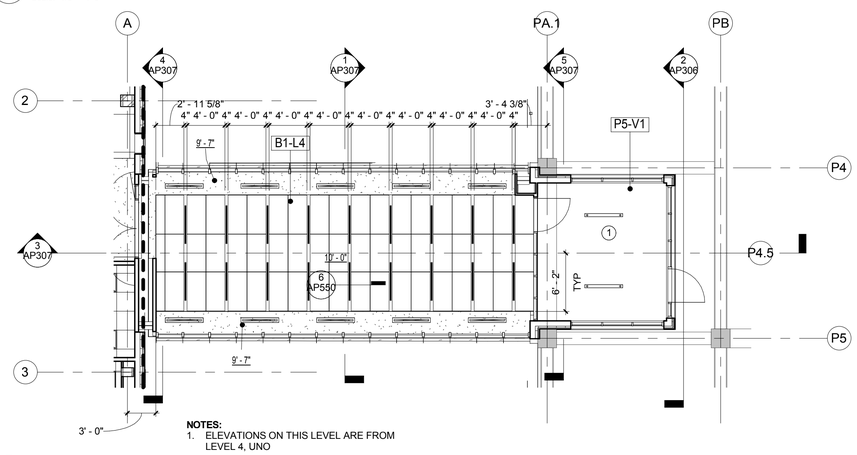

NOTES:
1. ELEVATIONS ON THIS LEVEL ARE FROM LEVEL 4, UNO

4 / AP157 Skybridge RCP - Level 4 to P5
Scale: 1/8" = 1'-0"

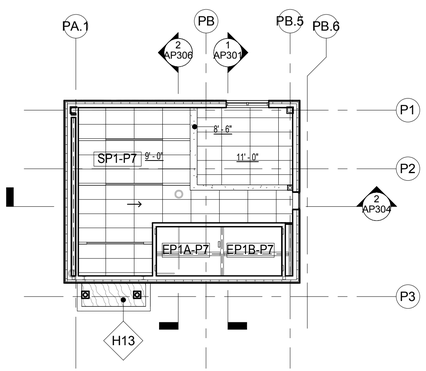

1 / AP157 Pkng P7 RCP - Partial
Scale: 3/32" = 1'-0"

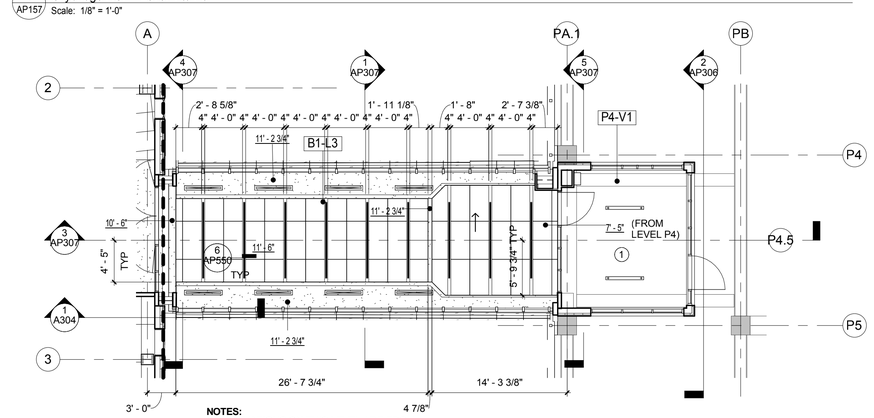

NOTES:
1. ELEVATIONS ON THIS LEVEL ARE FROM LEVEL 3, UNO

3 / AP157 Skybridge RCP - Level 3 to P4
Scale: 1/8" = 1'-0"

GENERAL RCP NOTES - SKYBRIDGE

1. MECHANICAL, ELECTRICAL AND PLUMBING FIXTURES, ELEMENTS AND DEVICES SHOWN FOR REFERENCE. SEE MECH AND ELEC FOR THOSE DISCIPLINES, TYP
2. WHERE MECH OR ELEC LOCATIONS DIFFER FROM ARCHITECTURAL, ARCHITECURAL SHALL PREVAIL
3. IN AREAS WHERE CEILINGS ARE OPEN TO STRUCTURE, MOUNT LIGHTING MINIMUM 7'-6" TO BOTTOM OF FIXTURE. COORDINATE OPEN TO STRUCTURE AREAS TO ENSURE SYSTEMS AND EQUIPMENT DO NOT OCCUR BELOW 7'-6" AFF, TYP
4. FOR TYPICAL CEILING TRANSITION DETAILS, SEE SHEET AP550
5. SEE INTERIOR FINISH SCHEDULES FOR SPECIFIC CEILING MATERIAL
6. SEE ELEC FOR APPROXIMATE LOCATIONS OF SECURITY CAMERAS, TYP
7. SEE SHEET AP150 FOR ADDITIONAL GENERAL RCP NOTES

SHEET NOTES

1. CEILING OPEN TO STRUCTURE; PNT EXPOSED PIPING, CONDUIT & SURFACE-MOUNTED J-BOXES IN CEILING AREA, TYP
2. CEILING OPEN TO IMP PANELS UNDER PARKING DECK ABOVE; PNT EXPOSED PIPING, CONDUIT & SURFACE-MOUNTED J-BOXES IN CEILING AREA, TYP
3. IMP UNDER CONCRETE STRUCTURE

REFLECTED CEILING PLAN LEGEND - PARKING GARAGE

- SIGN, SEE AP700
- HEIGHT WARNING BAR, SEE AP700
- GWB CEILING
- OPEN TO STRUCTURE
- 1'-0" CEILING HEIGHT (FROM LEVEL DIRECTLY BELOW), UNO
- 200 ROOM NUMBER
- RECESSED LINEAR LIGHT FIXTURE
- PENDANT MOUNT LINEAR LIGHT FIXTURE
- WALL MOUNT LINEAR LIGHT FIXTURE
- RECESSED ROUND LIGHT FIXTURE
- PENDANT ROUND LIGHT FIXTURE
- MECHANICAL DIFFUSER, SEE MECH
- EXIT SIGN, SEE ELEC

SCALE: 3/32" = 1' - 0"
0' 5'-4" 10'-8" 21'-4" 42'-8"
SCALE: 1/8" = 1' - 0"
0' 4' 8' 16' 32'

N

RECORD DRAWINGS

AS BUILT DRAWING
THIS DRAWING HAS BEEN PREPARED FROM CONTRACTOR FURNISHED INFORMATION. KUMIN ASSOCIATES, INC. MAKES NO WARRANTY, EXPRESSED OR IMPLIED, WITH REGARD TO THE ACCURACY OR COMPLETENESS OF THE INFORMATION NOW RECORDED IN THIS DRAWING. KUMIN ASSOCIATES, INC. WILL NOT ASSUME ANY LIABILITY, PROFESSIONAL OBLIGATION OR RISK THAT MIGHT OCCUR DUE TO THE RE-USE OF THIS INFORMATION.

KUMIN
ARCHITECTURE INTERIORS PLANNING
1049 W 5TH AVE, SUITE 200
ANCHORAGE, AK 99501
907.272.5863
CAA LICENSE: AC-00501

NEESE CONSTRUCTION, INC.

Childrens Dental Clinic Building

4441 Diplomacy Drive, Anchorage AK 99508
Southcentral Foundation

No.	Description	Date

Drawn By: SS
Checked By: JS
Date: 24 DEC 2018
Phase: RECORD DRAWINGS
Job No: 21519.00
SHEET TITLE: RCP - Level P7 (Partial), Skybridge

SHEET NO:
AP157

1/4/2019 2:03:03 AM

GENERAL EXTERIOR ELEVATION NOTES - PARKING GARAGE

1. SEE SHEET AP202 FOR EXTERIOR ELEVATION GENERAL NOTES
2. SEE SHEET AP202 FOR EXTERIOR MATERIALS LEGEND

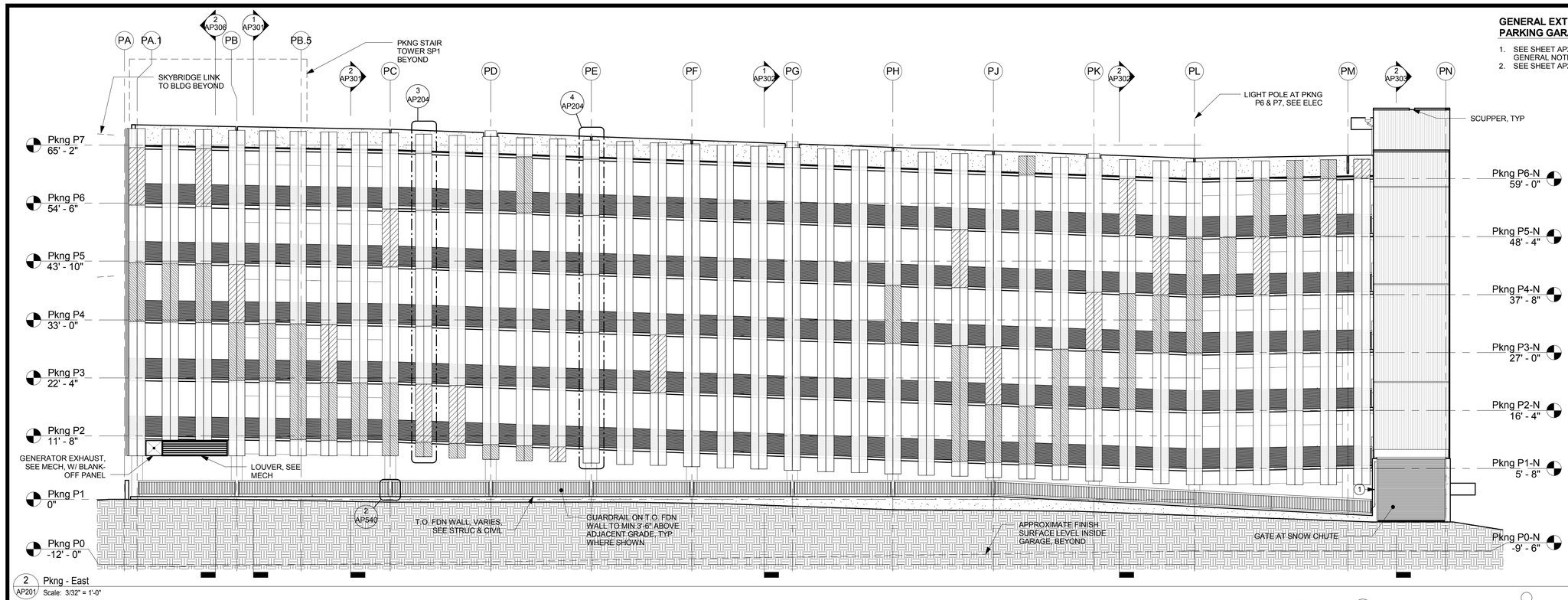

2 AP201 Pkng - East
Scale: 3/32" = 1'-0"

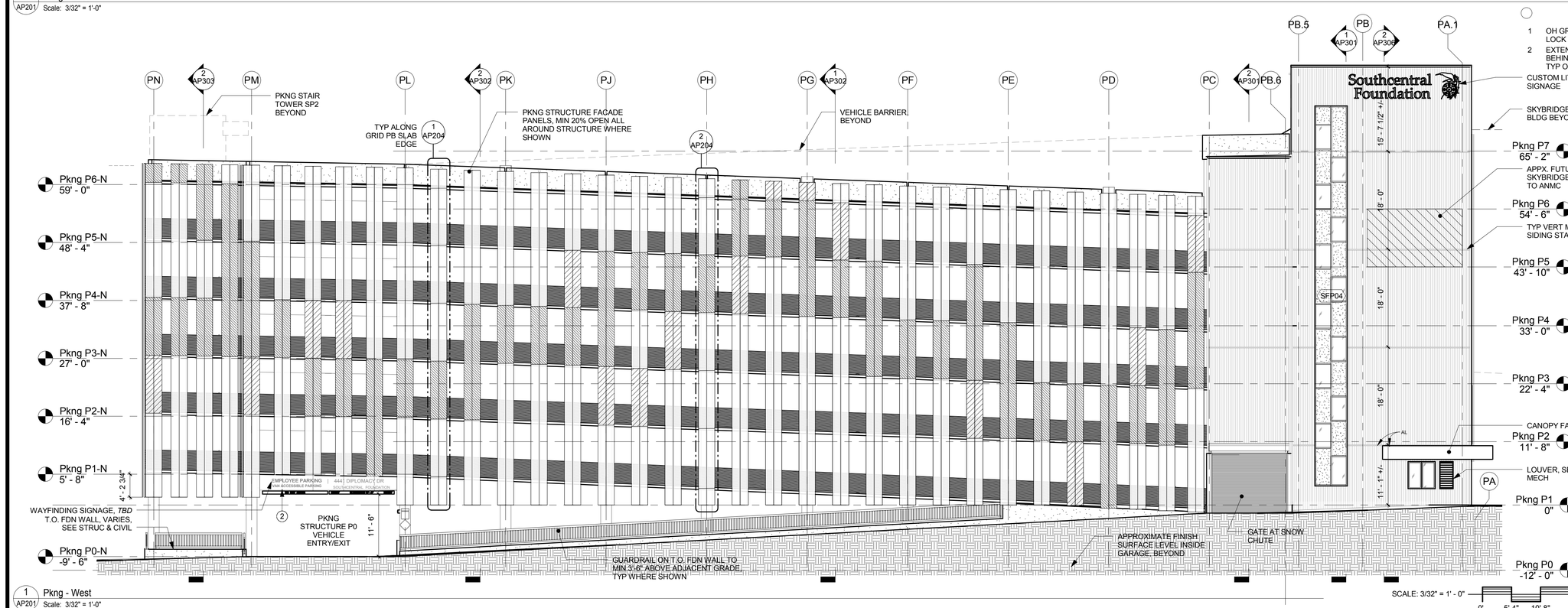

1 AP201 Pkng - West
Scale: 3/32" = 1'-0"

SHEET NOTES

1. OH GRILLE HAND CRANK WALL HANGER WITH LOCK
2. EXTEND CLADDING VERTICAL SUPPORT DOWN BEHIND WAYFINDING SIGN TO SUPPORT SIGN, TYP OVER ENTRANCE

SCALE: 3/32" = 1' - 0"
0' 5'-4" 10'-8" 21'-4" 42'-8"

RECORD DRAWINGS

AS BUILT DRAWING

THIS DRAWING HAS BEEN PREPARED FROM CONTRACTOR FURNISHED INFORMATION. KUMIN ASSOCIATES, INC. MAKES NO WARRANTY, EXPRESSED OR IMPLIED, WITH REGARD TO THE ACCURACY OR COMPLETENESS OF THE INFORMATION NOW RECORDED IN THIS DRAWING. KUMIN ASSOCIATES, INC. WILL NOT ASSUME ANY LIABILITY, PROFESSIONAL OBLIGATION OR RISK THAT MIGHT OCCUR DUE TO THE RE-USE OF THIS INFORMATION.

KUMIN
ARCHITECTURE INTERIORS PLANNING
9101 JEWEL LAKE ROAD, SUITE 300
ANCHORAGE, AK 99502
907.272.5915 FAX 272.5915
CAA LICENSE: AC-2501

NEESE CONSTRUCTION, INC.

Childrens Dental Clinic Building

4441 Diplomacy Drive, Anchorage AK 99508

Southcentral Foundation

No.	Description	Date

Drawn By: SS
Checked By: JS
Date: 24 DEC 2018
Phase: RECORD DRAWINGS
Job No: 21519.00
SHEET TITLE: Exterior Elevations
SHEET NO: AP201

1/4/2019 2:05:29 AM

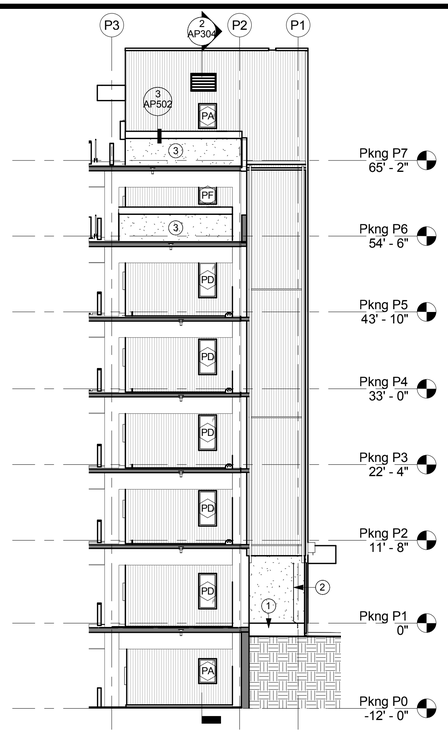

4 AP202 Pkng - North, Partial
Scale: 3/32" = 1'-0"

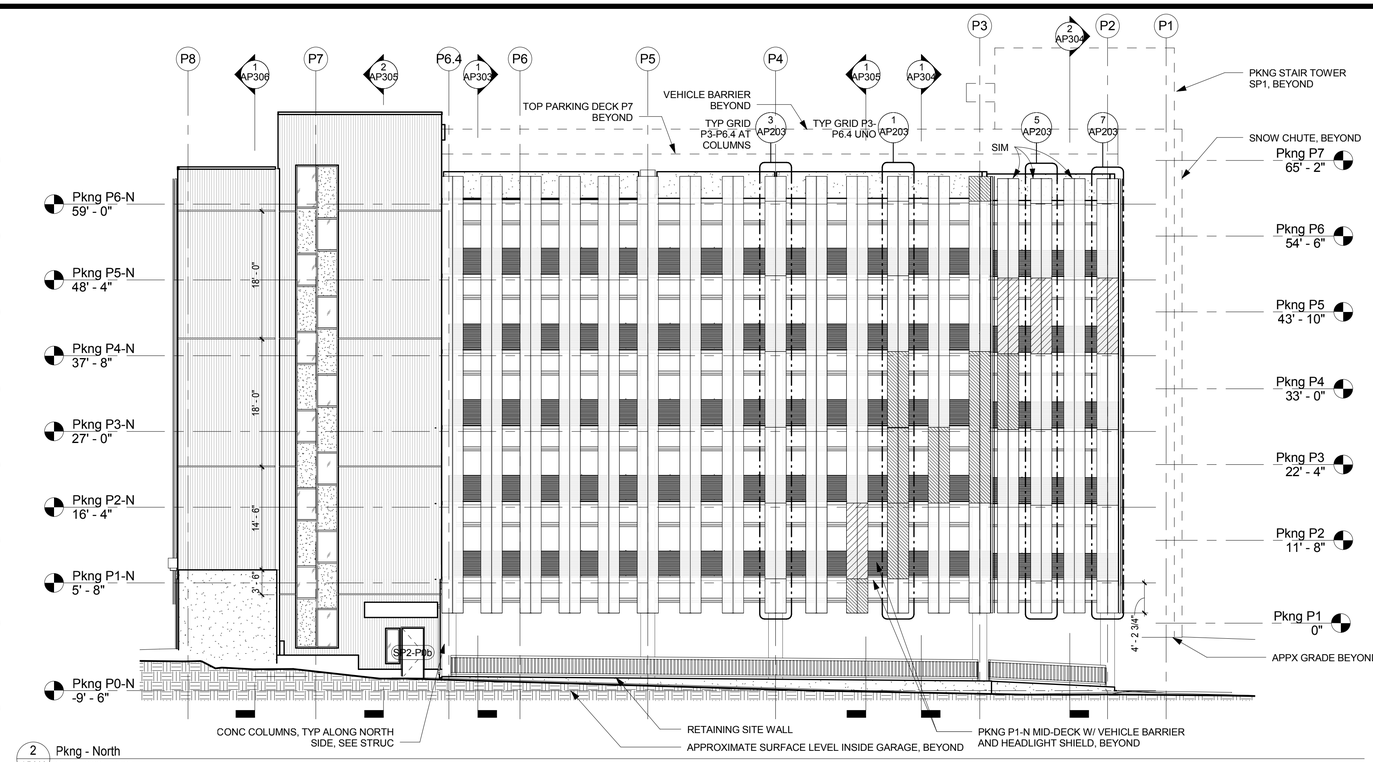

2 AP202 Pkng - North
Scale: 3/32" = 1'-0"

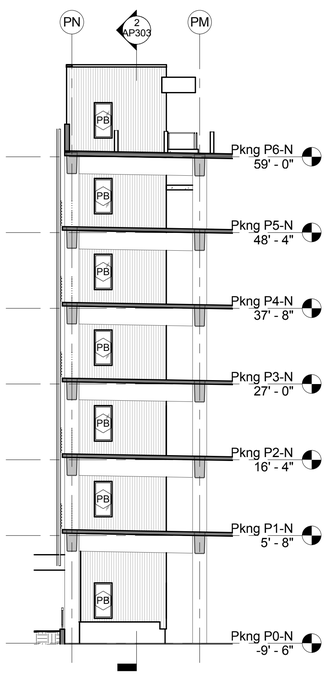

3 AP202 Pkng - West, Partial
Scale: 3/32" = 1'-0"

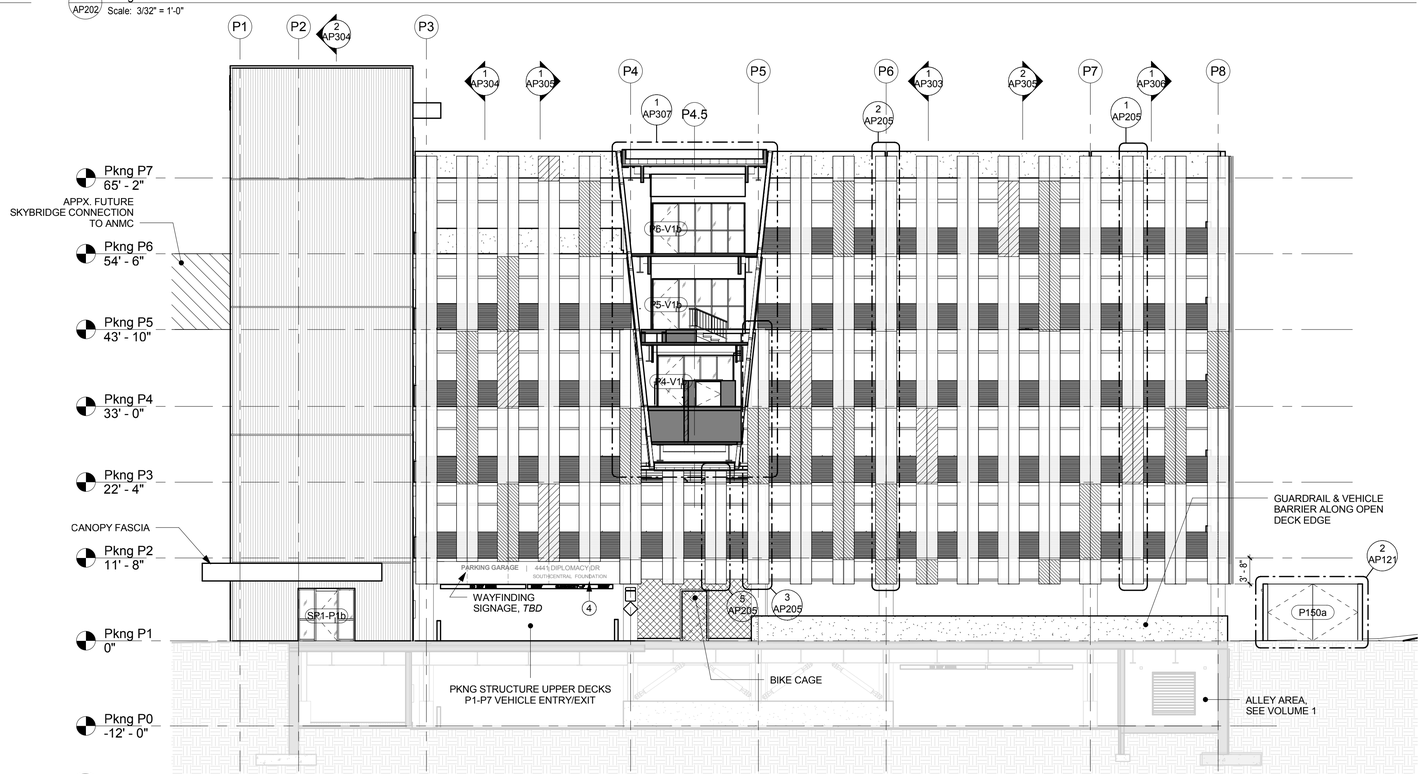

1 AP202 Pkng - South
Scale: 3/32" = 1'-0"

GENERAL EXTERIOR ELEVATION NOTES

1. NOTES APPLY TO ALL EXTERIOR PKNG ELEVATIONS, UNO
2. SEE PLANS FOR OPENING LOCATION DIMENSIONS
3. SEE AP600 SERIES SHEETS FOR WINDOW, CURTAINWALL AND STOREFRONT TYPES AND NOTES
4. SEE PARTIAL EXTERIOR ELEVATIONS FOR WINDOW AND STOREFRONT TYPES NOT INDICATED IN OVERALL ELEVATIONS
5. SEE DETAILS FOR METAL SIDING PANEL EXTENT AT BASE, PARAPET AND OPENINGS, TYP

EXTERIOR ELEVATION MATERIALS LEGEND

- CLEAR GLASS
- TRANSLUCENT GLASS
- COLOR 1 GLASS
- COLOR 2 GLASS
- VERTICAL METAL SIDING (SEE DETAIL 5/AP202 FOR PATTERN)
  - MP-2: SEE SPECS
  - MP-3: SEE SPECS
  - MP-4: SEE SPECS
- PLP

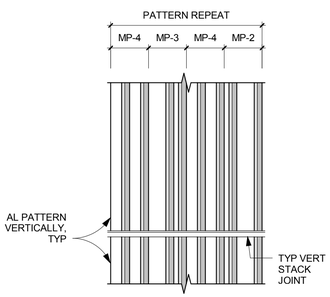

5 AP202 Pkng - Typ Vertical Mtl Siding Pattern
Scale: 1/2" = 1'-0"

SHEET NOTES

1. GAS METER, SEE CIVIL, LANDSCAPING AND MECH
2. OH GRILLE HAND CRANK WALL HANGER WITH LOCK
3. AWW PLYWOOD PROTECTIVE SHEETING, COORD W/ STRUC FOR ATTACHMENTS
4. EXTEND CLADDING VERTICAL SUPPORT DOWN BEHIND WAYFINDING SIGN TO SUPPORT SIGN, TYP OVER ENTRANCE

SCALE: 3/32" = 1' - 0"
0' 5'-4" 10'-8" 21'-4" 42'-8"

RECORD DRAWINGS

AS BUILT DRAWING

THIS DRAWING HAS BEEN PREPARED FROM CONTRACTOR FURNISHED INFORMATION. KUMIN ASSOCIATES, INC. MAKES NO WARRANTY, EXPRESSED OR IMPLIED, WITH REGARD TO THE ACCURACY OR COMPLETENESS OF THE INFORMATION NOW RECORDED IN THIS DRAWING. KUMIN ASSOCIATES, INC. WILL NOT ASSUME ANY LIABILITY, PROFESSIONAL OBLIGATION OR RISK THAT MIGHT OCCUR DUE TO THE RE-USE OF THIS INFORMATION.

KUMIN
ARCHITECTURE INTERIORS PLANNING
1049 W 5TH AVE, SUITE 200
ANCHORAGE, AK 99501
907.272.5863
CA LICENSE: AC-25251

NEESE CONSTRUCTION, INC.

Childrens Dental Clinic Building

4441 Diplomacy Drive, Anchorage AK 99508

Southcentral Foundation

No.	Description	Date

Drawn By: SS
Checked By: JS
Date: 24 DEC 2018
Phase: RECORD DRAWINGS
Job No: 21519.00
SHEET TITLE: Exterior Elevations
SHEET NO: AP202

1/4/2019 2:05:59 AM

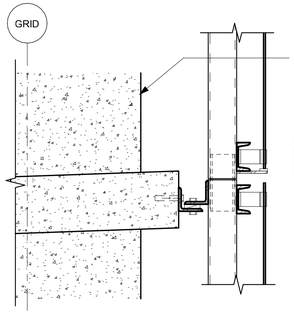

8 AP203 Glass Cladding Embed - Sloped Slab Edge at Column
Scale: 1 1/2" = 1'-0"

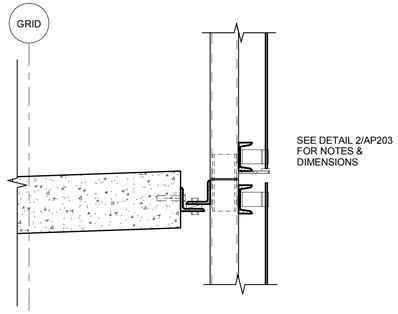

6 AP203 Glass Cladding Embed - Sloped Slab Edge
Scale: 1 1/2" = 1'-0"

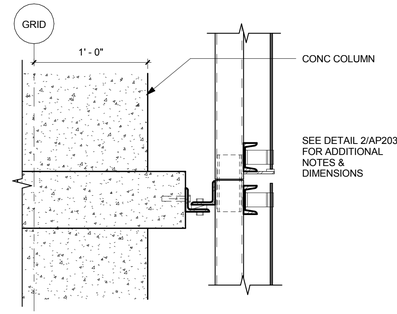

4 AP203 Glass Cladding Embed - Flat Slab Edge at Column
Scale: 1 1/2" = 1'-0"

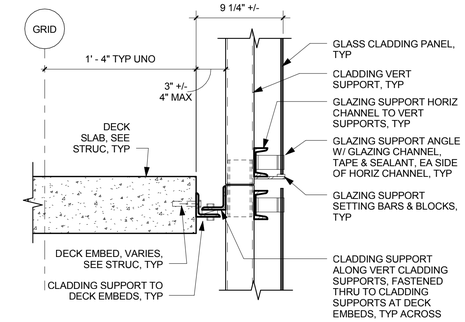

2 AP203 Glass Cladding Embed - Flat Slab Edge
Scale: 1 1/2" = 1'-0"

GENERAL EXTERIOR ELEVATION NOTES - GARAGE CLADDING

1. SEE OVERALL EXTERIOR ELEVATIONS FOR GLASS TYPES OF EACH PANEL, TYP
2. COORDINATE ALL EMBEDS FOR GLASS CLADDING SUPPORT W/ STRUC, TYP
3. HORIZONTAL CLADDING BREAKS ARE DIMENSIONED VERTICALLY ALONG CENTERLINE OF VERTICAL SUPPORT, TYP UNO
4. VERTICAL DIMENSIONS OF CLADDING, ASSUME HORIZ PANEL BREAKS OCCUR IN-LINE WITH CENTER OF SLAB EMBED AND THAT SLAB EMBEDS OCCUR 3" ABOVE BOTTOM OF DECK
5. GLASS CLADDING AND SUPPORT ASSEMBLIES ARE DEFERRED DESIGN SUBMITTAL, SEE STRUC. DIMENSIONS AND ELEMENTS DEPICTED SHOW DESIGN INTENT

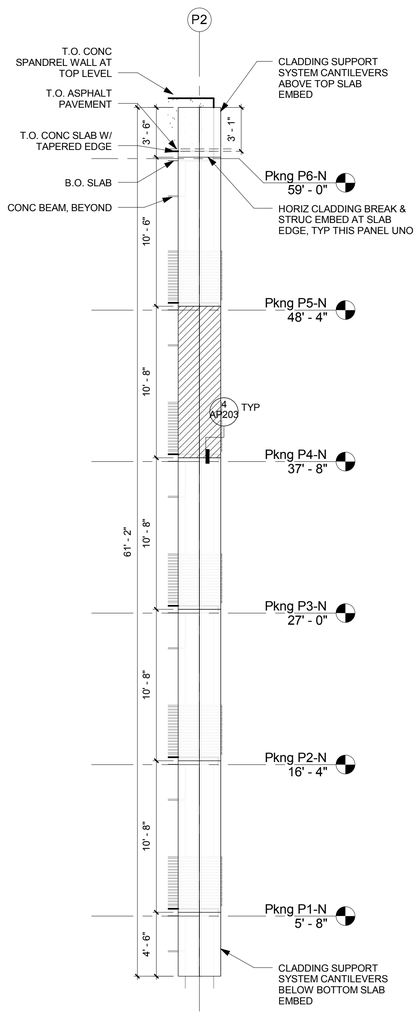

7 AP203 Glass Cladding - Grid PM Panel - Column
Scale: 3/16" = 1'-0"

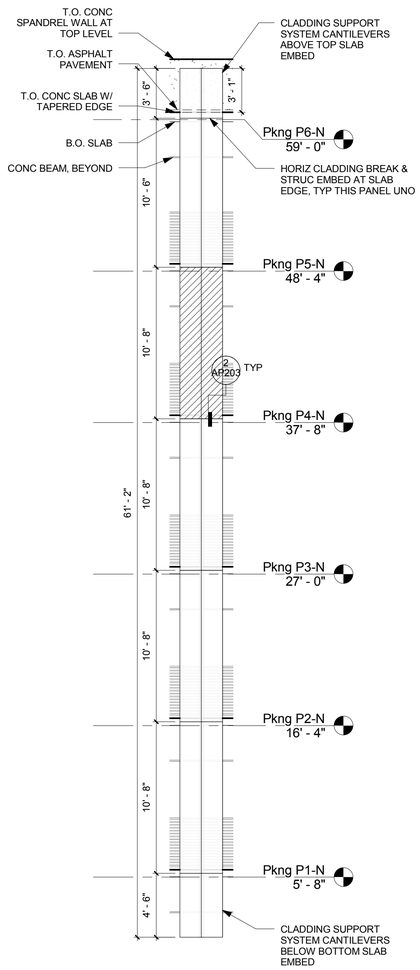

5 AP203 Glass Cladding - Grid PM Panel - Slab Edge
Scale: 3/16" = 1'-0"

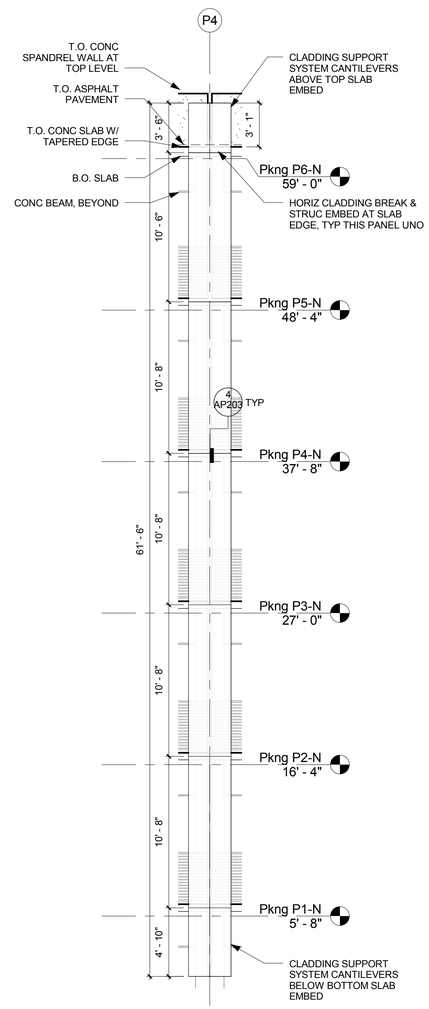

3 AP203 Glass Cladding - Grid PN Panel - Column
Scale: 3/16" = 1'-0"

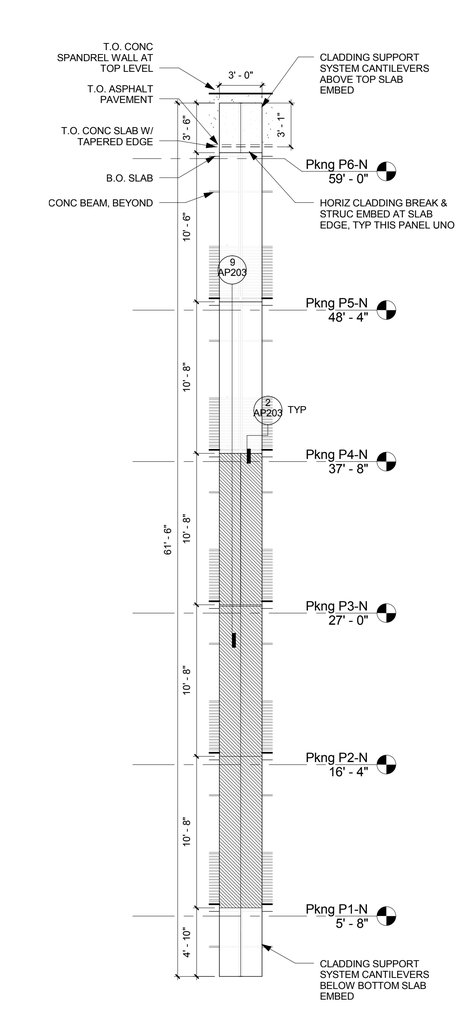

1 AP203 Glass Cladding - Grid PN Panel - Slab Edge
Scale: 3/16" = 1'-0"

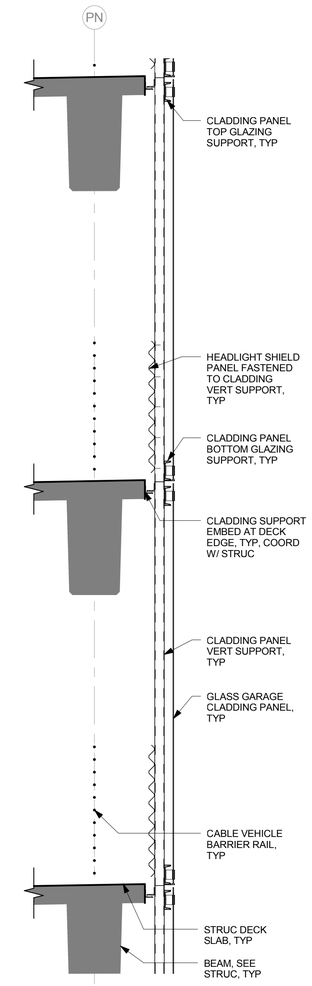

9 AP203 PG - Deck Edge Railings & Cladding Typ Section
Scale: 1/2" = 1'-0"

AS BUILT DRAWING
THIS DRAWING HAS BEEN PREPARED FROM CONTRACTOR FURNISHED INFORMATION. KUMIN ASSOCIATES, INC. MAKES NO WARRANTY, EXPRESSED OR IMPLIED, WITH REGARD TO THE ACCURACY OR COMPLETENESS OF THE INFORMATION NOW RECORDED IN THIS DRAWING. KUMIN ASSOCIATES, INC. WILL NOT ASSUME ANY LIABILITY, PROFESSIONAL OBLIGATION OR RISK THAT MIGHT OCCUR DUE TO THE RE-USE OF THIS INFORMATION.

KUMIN
ARCHITECTURE, INTERIORS, PLANNING
9101 JEWEL LAKE ROAD, ANCHORAGE, AK 99502
907.272.5863 FAX 272.5820
CA LICENSE: AC-25231

NEESE CONSTRUCTION, INC.

Childrens Dental Clinic Building

4441 Diplomacy Drive, Anchorage AK 99508

Southcentral Foundation

No.	Description	Date

Drawn By: SS
Checked By: JS
Date: 24 DEC 2018
Phase: RECORD DRAWINGS
Job No: 21519.00
SHEET TITLE: Exterior Elevations - Glass Cladding

SHEET NO:

AP203

14/2019 2:55:39 AM

RECORD DRAWINGS

GENERAL EXTERIOR ELEVATION NOTES - GARAGE CLADDING

1. SEE SHEET AP203 FOR GENERAL GARAGE CLADDING NOTES, TYPICAL DECK EDGE SECTION, AND CLADDING ATTACHMENT DETAILS

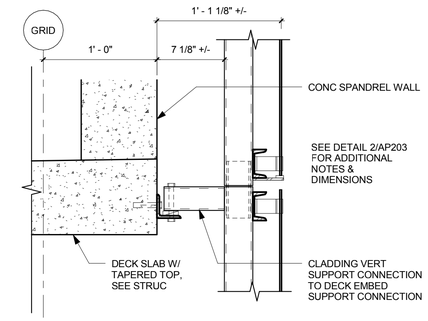

5 / AP204 Glass Cladding Embed - Upper Decks Slab Edge
Scale: 1 1/2" = 1'-0"

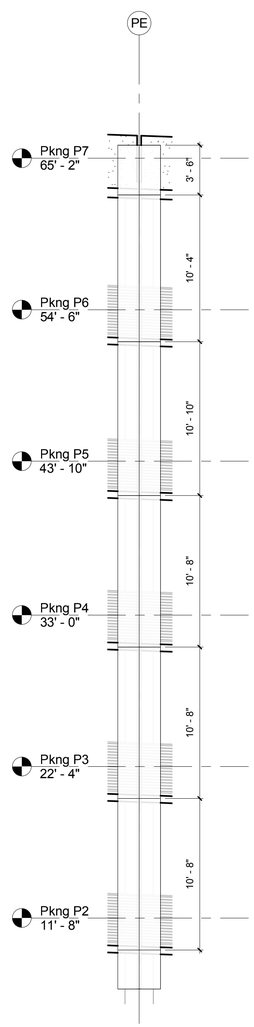

4 / AP204 Glass Cladding - Grid P8 Panel - Column
Scale: 3/16" = 1'-0"

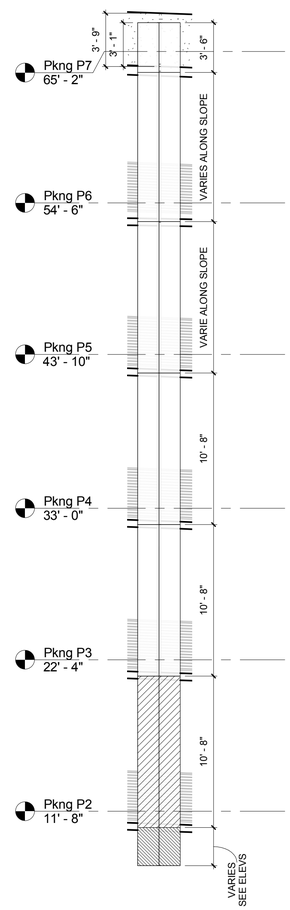

3 / AP204 Glass Cladding - Grid P8 Panel - Slab Edge
Scale: 3/16" = 1'-0"

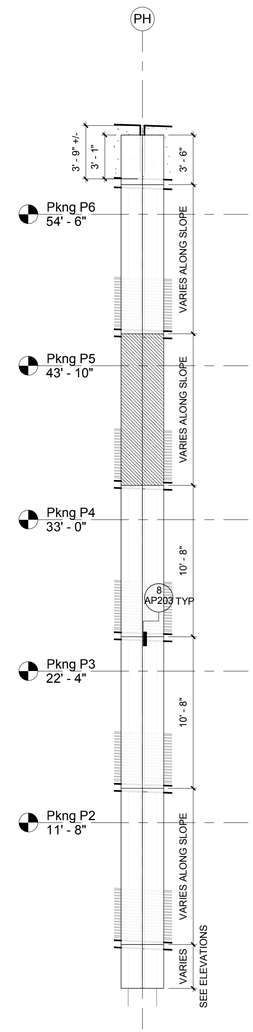

2 / AP204 Glass Cladding - Grid P2 Panel - Column
Scale: 3/16" = 1'-0"

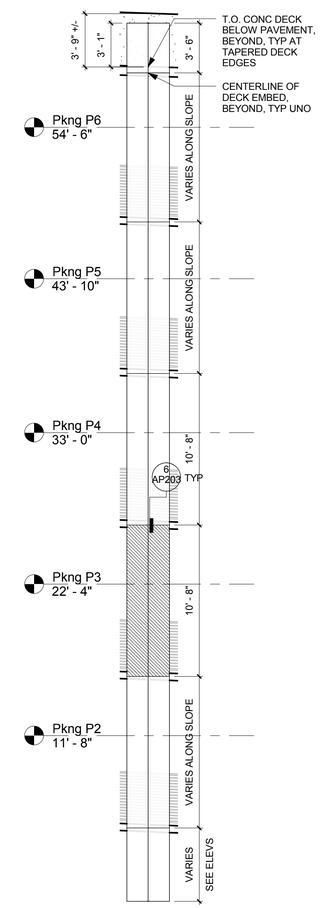

1 / AP204 Glass Cladding - Grid P2 Panel - Slab Edge
Scale: 3/16" = 1'-0"

AS BUILT DRAWING
THIS DRAWING HAS BEEN PREPARED FROM CONTRACTOR FURNISHED INFORMATION. KUMIN ASSOCIATES, INC. MAKES NO WARRANTY, EXPRESSED OR IMPLIED, WITH REGARD TO THE ACCURACY OR COMPLETENESS OF THE INFORMATION NOW RECORDED IN THIS DRAWING. KUMIN ASSOCIATES, INC. WILL NOT ASSUME ANY LIABILITY, PROFESSIONAL OBLIGATION OR RISK THAT MIGHT OCCUR DUE TO THE RE-USE OF THIS INFORMATION.

KUMIN
ARCHITECTURE INTERIORS PLANNING
9101 JEWEL LAKE ROAD, SUITE 200
ANCHORAGE, AK 99502
907.272.5863 FAX 272.5201
CA LICENSE: AC-22231

NEES-SANDOS CONSTRUCTION, INC.

Childrens Dental Clinic Building

4441 Diplomacy Drive, Anchorage AK 99508
Southcentral Foundation

No.	Description	Date

Drawn By: SS
Checked By: JS
Date: 24 DEC 2018
Phase: RECORD DRAWINGS
Job No: 21519.00
SHEET TITLE: Exterior Elevations - Glass Cladding

SHEET NO:
AP204

1/4/2019 2:05:42 AM

RECORD DRAWINGS

GENERAL EXTERIOR ELEVATION NOTES - GARAGE CLADDING

1. SEE SHEET AP203 FOR GENERAL GARAGE CLADDING NOTES, TYPICAL DECK EDGE SECTION, AND CLADDING ATTACHMENT DETAILS

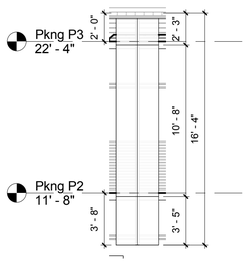

5 / AP205 Glass Cladding - Grid PA.1 Panel - Under Skybridge
Scale: 3/16" = 1'-0"

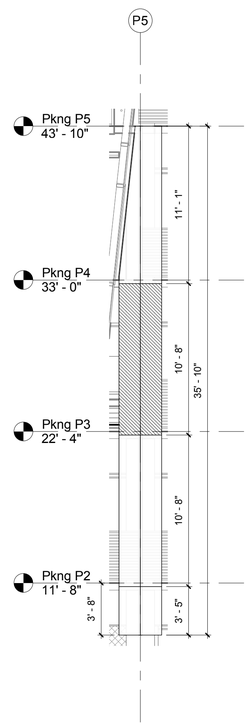

3 / AP205 Glass Cladding - Grid PA.1 Panel - East of Skybridge
Scale: 3/16" = 1'-0"

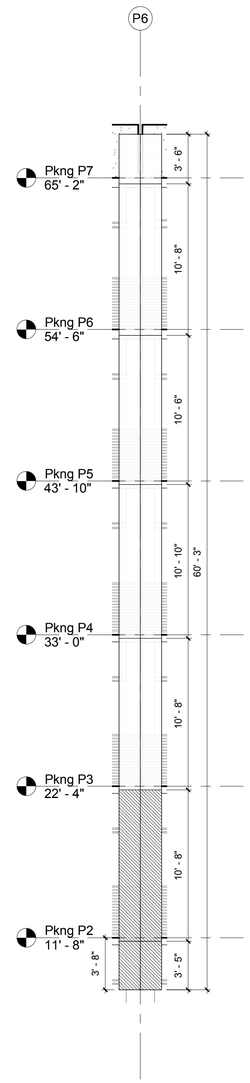

2 / AP205 Glass Cladding - Grid PA.1 Panel - Column
Scale: 3/16" = 1'-0"

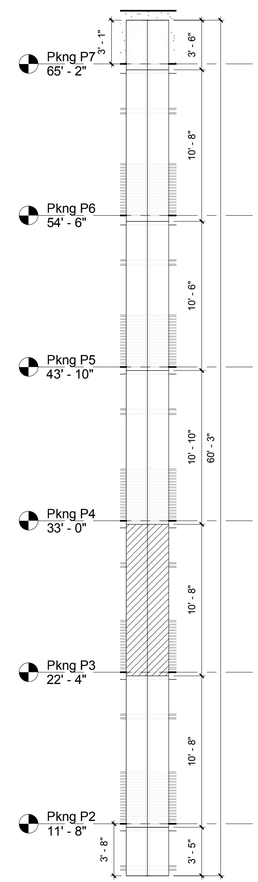

1 / AP205 Glass Cladding - Grid PA.1 Panel - Slab Edge
Scale: 3/16" = 1'-0"

AS BUILT DRAWING

THIS DRAWING HAS BEEN PREPARED FROM CONTRACTOR FURNISHED INFORMATION. KUMIN ASSOCIATES, INC. MAKES NO WARRANTY, EXPRESSED OR IMPLIED, WITH REGARD TO THE ACCURACY OR COMPLETENESS OF THE INFORMATION NOW RECORDED IN THIS DRAWING. KUMIN ASSOCIATES, INC. WILL NOT ASSUME ANY LIABILITY, PROFESSIONAL OBLIGATION OR RISK THAT MIGHT OCCUR DUE TO THE RE-USE OF THIS INFORMATION.

KUMIN
ARCHITECTURE INTERIORS PLANNING
9101 JEWEL LAKE ROAD, SUITE 200
ANCHORAGE, AK 99502
907.272.5915 CA LICENSE: AC-22231

NEESE CONSTRUCTION, INC.

Childrens Dental Clinic Building

4441 Diplomacy Drive, Anchorage AK 99508

Southcentral Foundation

No.	Description	Date

Drawn By: SS
Checked By: JS
Date: 24 DEC 2018
Phase: RECORD DRAWINGS
Job No: 21519.00
SHEET TITLE: Exterior Elevations - Glass Cladding

SHEET NO: AP205

1/4/2019 2:05:45 AM

RECORD DRAWINGS

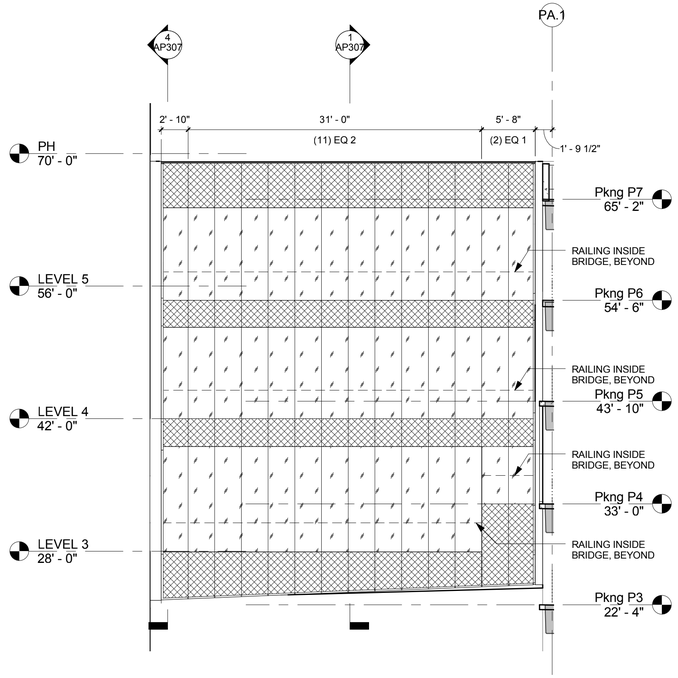

NOTE: DO NOT TAKE VERTICAL DIMENSIONS FOR CURTAINWALL FROM ELEVATION, SEE SECTIONS

2 AP220 Skybridge - East
Scale: 1/8" = 1'-0"

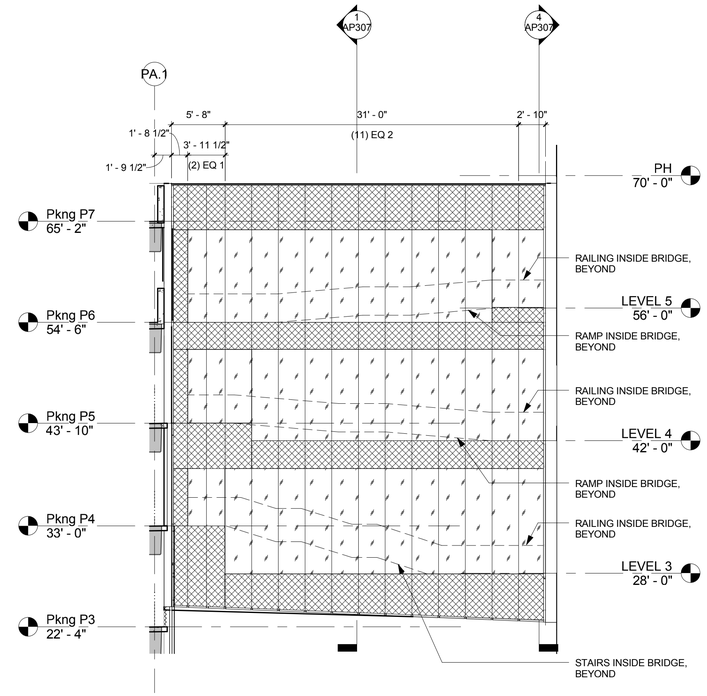

NOTE: DO NOT TAKE VERTICAL DIMENSIONS FOR CURTAINWALL FROM ELEVATION, SEE SECTIONS

1 AP220 Skybridge - West
Scale: 1/8" = 1'-0"

GENERAL EXTERIOR ELEVATION NOTES - SKYBRIDGE

1. CURTAINWALLS SLOPE AWAY FROM ELEVATION VIEW FROM TOP TO BOTTOM. SEE DETAILS FOR HORIZONTAL MULLION LOCATIONS, TYP
2. SEE DETAILS FOR ALL CURTAINWALL EDGE CONDITIONS
3. SKYBRIDGE CURTAINWALLS ARE SSG (STRUCTURAL SEALANT GLAZED)

SKYBRIDGE EXTERIOR ELEVATION MATERIALS LEGEND

CLEAR GLASS

SPANDREL

AS BUILT DRAWING
THIS DRAWING HAS BEEN PREPARED FROM CONTRACTOR FURNISHED INFORMATION. KUMIN ASSOCIATES, INC. MAKES NO WARRANTY, EXPRESSED OR IMPLIED, WITH REGARD TO THE ACCURACY OR COMPLETENESS OF THE INFORMATION NOW RECORDED IN THIS DRAWING. KUMIN ASSOCIATES, INC. WILL NOT ASSUME ANY LIABILITY, PROFESSIONAL OBLIGATION OR RISK THAT MIGHT OCCUR DUE TO THE RE-USE OF THIS INFORMATION.

KUMIN
ARCHITECTURE INTERIORS PLANNING
9101 JEWEL LAKE ROAD, SUITE 300
ANCHORAGE, AK 99502
(907) 272-5363
CA LICENSE: AC-22231

NEESE CONSTRUCTION, INC.

Childrens Dental Clinic Building

4441 Diplomacy Drive, Anchorage AK 99508

Southcentral Foundation

No.	Description	Date

Drawn By: SS
Checked By: JS
Date: 24 DEC 2018
Phase: RECORD DRAWINGS
Job No: 21519.00
SHEET TITLE: Exterior Elevations - Skybridge
SHEET NO: AP220

1/4/2019 2:08:47 AM

RECORD DRAWINGS

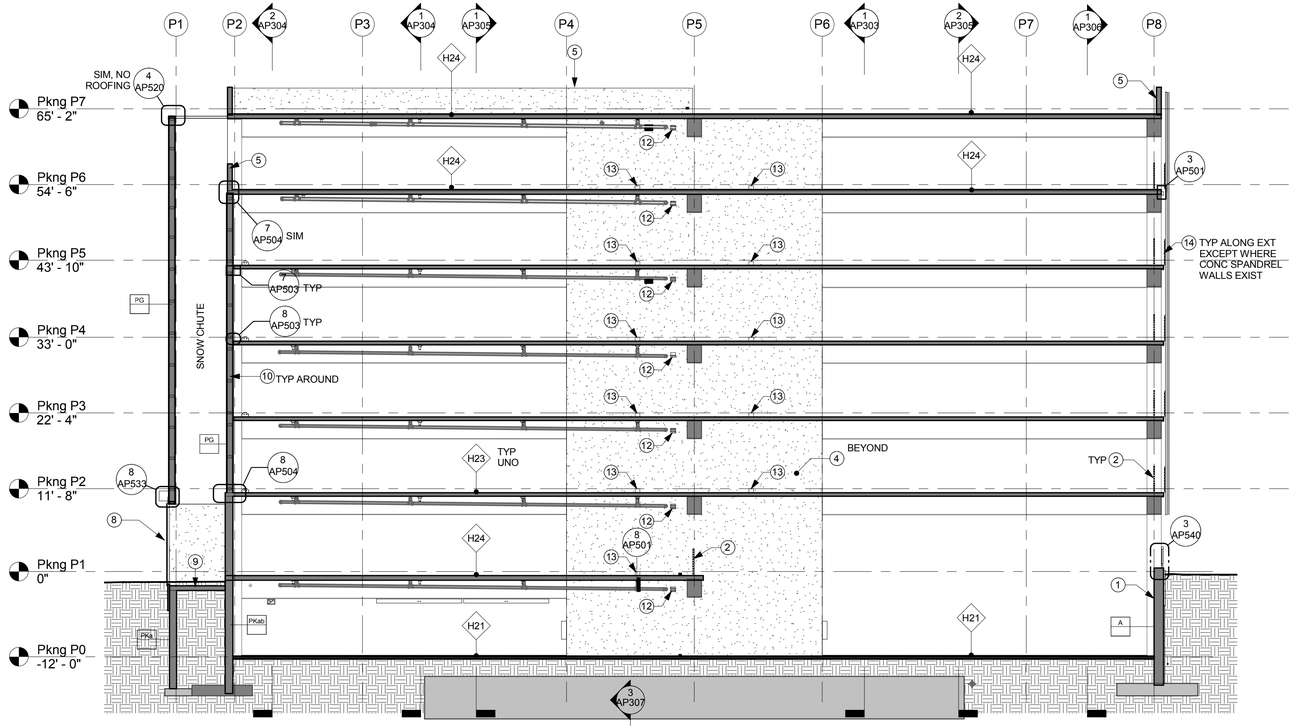

2 AP301 PG Section - North 2
Scale: 3/32" = 1'-0"

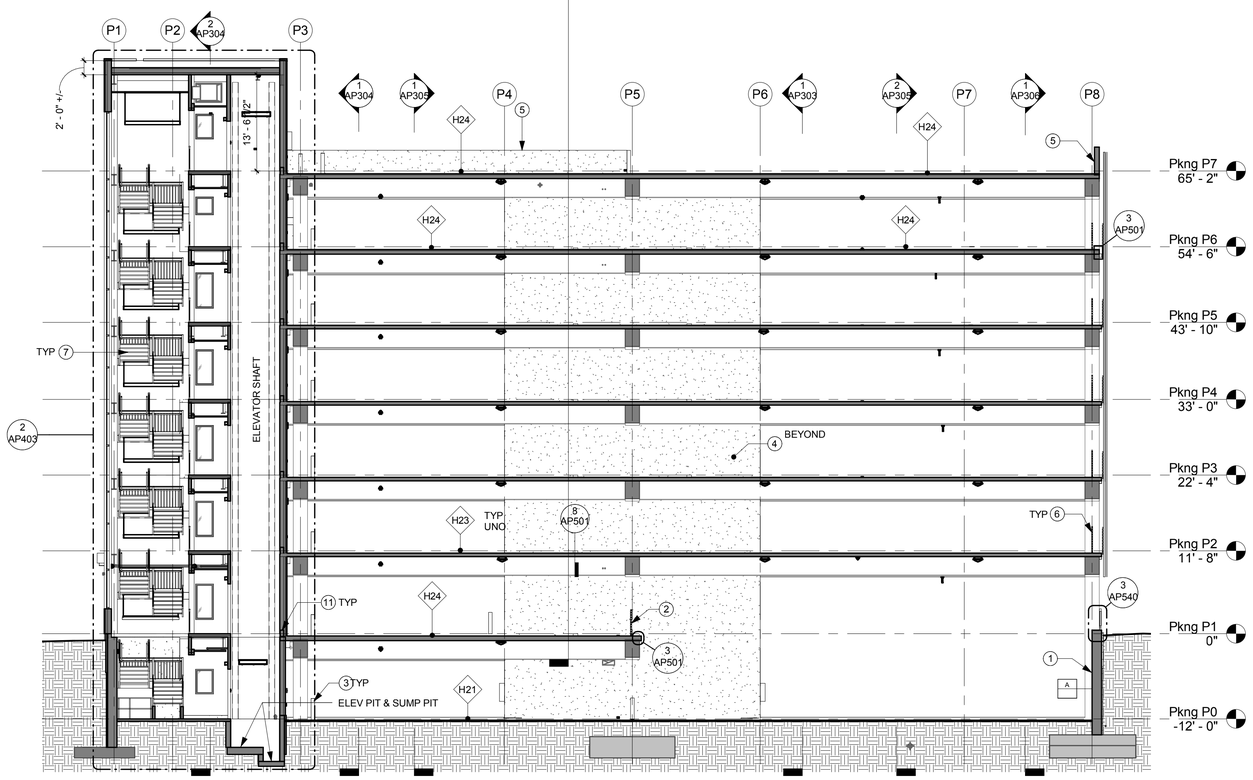

1 AP301 PG Section - North 1
Scale: 3/32" = 1'-0"

GENERAL PKNG BUILDING SECTION NOTES

1. "P_" LEVELS' ELEVATIONS ARE TO T.O. FINISH DECK, ALONG SOUTH FACE OF CONCRETE DECK NEAR GRID PA.1
2. "P_-N" LEVELS' ELEVATIONS ARE TO T.O. FINISH DECK ALONG GRID PL
3. MECH, ELEC & STRUC ITEMS ARE SHOWN FOR REFERENCE. SEE THOSE DISCIPLINES FOR ACTUAL ITEM, SIZE, CONFIGURATION, TYP
4. FOR PARTIAL EXTERIOR ELEVATION INFORMATION SHOWN, SEE SHEET AP202 FOR GENERAL EXTERIOR ELEVATION NOTES AND EXTERIOR MATERIALS LEGEND, TYP
5. DECK SLOPES INDICATED ARE APPROXIMATE. REFER TO DATUM POINT ELEVATIONS INDICATED FOR WORKING POINTS OF SLOPED DECKS, TYP UNO

SHEET NOTES

1. CONC FOUNDATION WALL, SEE STRUC. W/ RAILING ABOVE IN SOME LOCATIONS, SEE ELEVATIONS
2. STEEL CABLE VEHICLE BARRIER, SEE STRUC
3. BOLLARD, MAX 7'-0" O.C., SEE CIVIL & STRUC
4. CONC SHEAR WALL, SEE STRUC
5. MIN 3'-6" HIGH CONC WALL, SEE STRUC
6. STEEL CABLE VEHICLE BARRIER W/ INTEGRAL HEADLIGHT SHIELD, SEE STRUC
7. STEEL STAIR W/ HANDRAILS & GUARDRAILS EA SIDE
8. SNOW CHUTE OVERHEAD COILING GRILLE
9. CONC SLAB, SEE STRUC
10. UPPER SNOW CHUTE WALL, SEE STRUC FOR FRAMING & INT PANELS
11. CONC CURB WALL AT CONC PARKING DECK EDGE, SEE STRUC, MIN 6" ABOVE DECK SURFACE, TYP AROUND
12. RAIN LEADER HORIZONTAL THROUGH SHEAR WALL, COORD W/ MECH & STRUC
13. SCUPPER THROUGH BO SHEAR WALL, SEE STRUC
14. HEADLIGHT BARRIER PANELS ON BACK SIDE OF FAÇADE SUPPORT FRAMES

SCALE: 3/32" = 1' - 0"
0' 5'-4" 10'-8" 21'-4" 42'-8"

RECORD DRAWINGS

AS BUILT DRAWING

THIS DRAWING HAS BEEN PREPARED FROM CONTRACTOR FURNISHED INFORMATION. KUMIN ASSOCIATES, INC. MAKES NO WARRANTY, EXPRESSED OR IMPLIED, WITH REGARD TO THE ACCURACY OR COMPLETENESS OF THE INFORMATION NOW RECORDED IN THIS DRAWING. KUMIN ASSOCIATES, INC. WILL NOT ASSUME ANY LIABILITY, PROFESSIONAL OBLIGATION OR RISK THAT MIGHT OCCUR DUE TO THE RE-USE OF THIS INFORMATION.

KUMIN
ARCHITECTURE INTERIORS PLANNING
9101 JEWEL LAKE ROAD, SUITE 200
ANCHORAGE, AK 99502
907.272.5863 FAX 272.5893
CA LICENSE: AC-25201

NEESE CONSTRUCTION, INC.

Childrens Dental Clinic Building

4441 Diplomacy Drive, Anchorage AK 99508

Southcentral Foundation

No.	Description	Date

Drawn By: SS
Checked By: JS
Date: 24 DEC 2018
Phase: RECORD DRAWINGS
Job No: 21519.00
SHEET TITLE: Building Sections

SHEET NO:

AP301

1/4/2019 2:08:05 AM

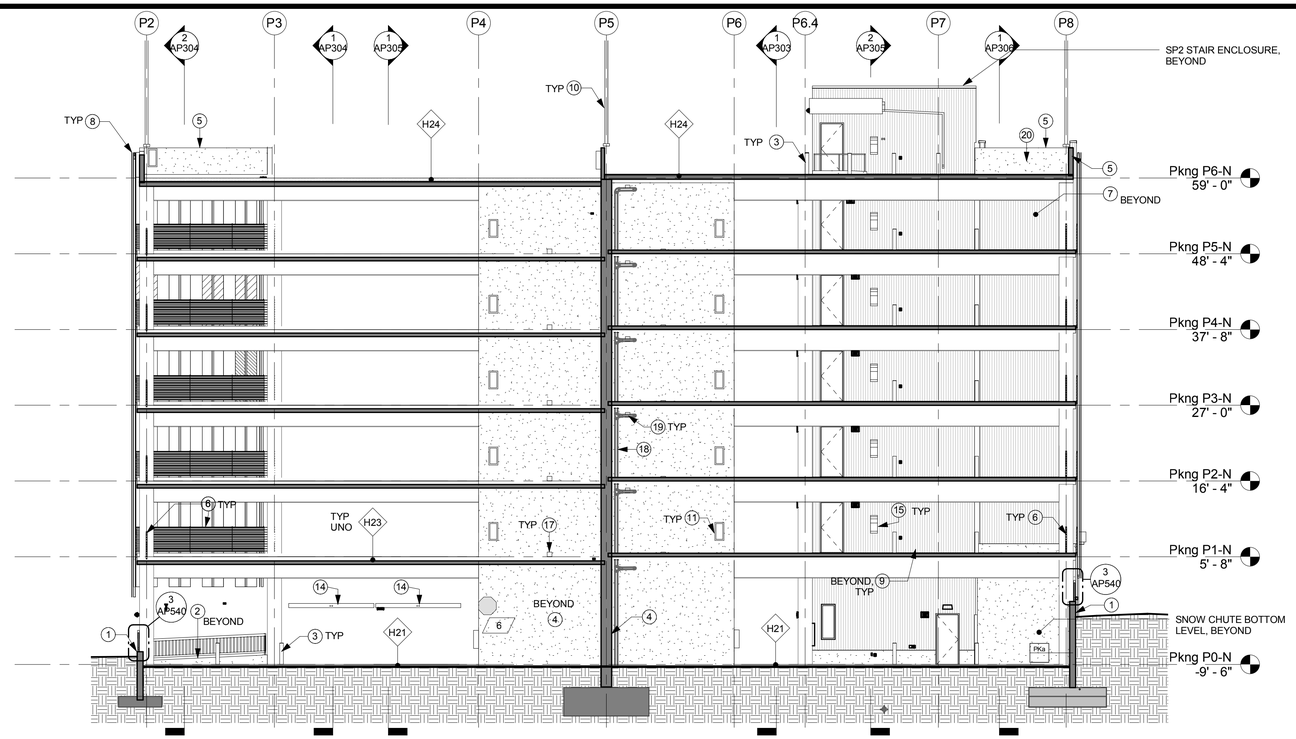

2 AP302 PG Section - North 4
Scale: 3/32" = 1'-0"

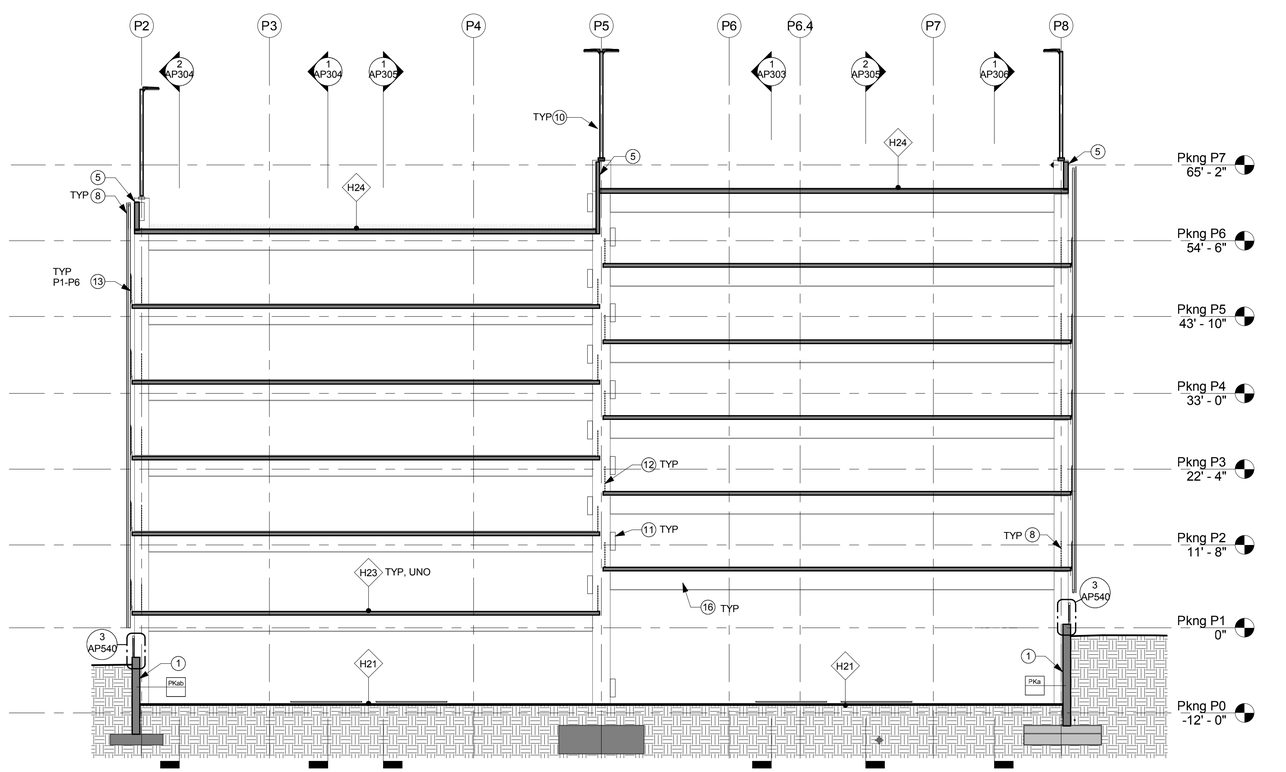

1 AP302 PG Section - North 3
Scale: 3/32" = 1'-0"

GENERAL PKNG SECTION NOTES

1. SEE SHEET AP301 FOR GENERAL PKNG BUILDING SECTION NOTES

SHEET NOTES

1. CONC FOUNDATION WALL, SEE STRUC. W/ RAILING ABOVE IN SOME LOCATIONS, SEE ELEVATIONS
2. CONC CURB WALL W/ RAILING ABOVE, SEE ELEVATIONS
3. BOLLARD, SEE CIVIL & STRUC
4. CONC SHEAR WALL, SEE STRUC
5. MIN 3'-6" HIGH CONC WALL, SEE STRUC
6. STEEL CABLE VEHICLE BARRIER W/ INTEGRAL HEADLIGHT SHIELD, SEE STRUC
7. UPPER SNOW CHUTE WALL, SEE STRUC FOR FRAMING & INT PANELS
8. FAÇADE ASSEMBLY
9. CONC CURB WALL AT CONC PARKING DECK EDGE, SEE STRUC, MIN 6" ABOVE DECK SURFACE, TYP AROUND
10. LIGHT POLE, SEE ELEC
11. FEC, SURFACE MOUNT
12. STEEL CABLE VEHICLE BARRIER, SEE STRUC
13. HEADLIGHT BARRIER PANELS ON BACK SIDE OF FAÇADE SUPPORT FRAMES
14. PARKING HEIGHT BAR
15. BLUE PHONE
16. CONC BEAM, SEE STRUC
17. SCUPPER THROUGH BO SHEAR WALL, SEE STRUC
18. RAIN LEADER VERTICAL, SEE MECH. SEE STRUC FOR DECK OPENING
19. RAIN LEADER HORIZONTAL THROUGH SHEAR WALL, COORD W/ MECH & STRUC
20. AWW PLYWOOD PROTECTIVE SHEETING, COORD W/ STRUC FOR ATTACHMENTS

SCALE: 3/32" = 1' - 0"
0' 5'-4" 10'-8" 21'-4" 42'-8"

RECORD DRAWINGS

AS BUILT DRAWING

THIS DRAWING HAS BEEN PREPARED FROM CONTRACTOR FURNISHED INFORMATION. KUMIN ASSOCIATES, INC. MAKES NO WARRANTY, EXPRESSED OR IMPLIED, WITH REGARD TO THE ACCURACY OR COMPLETENESS OF THE INFORMATION NOW RECORDED IN THIS DRAWING. KUMIN ASSOCIATES, INC. WILL NOT ASSUME ANY LIABILITY, PROFESSIONAL OBLIGATION OR RISK THAT MIGHT OCCUR DUE TO THE RE-USE OF THIS INFORMATION.

KUMIN
ARCHITECTURE INTERIORS PLANNING
9101 E. 22nd AVENUE, SUITE 1E200
SPOKANE VALLEY, WA 99223
(509) 272-9383
CA LICENSE: AC-00231

NEESE CONSTRUCTION, INC.

Childrens Dental Clinic Building

4441 Diplomacy Drive, Anchorage AK 99508

Southcentral Foundation

No.	Description	Date

Drawn By: SS
Checked By: JS
Date: 24 DEC 2018
Phase: RECORD DRAWINGS
Job No: 21519.00
SHEET TITLE: Building Sections

SHEET NO:

AP302

1/4/2019 2:08:09 AM

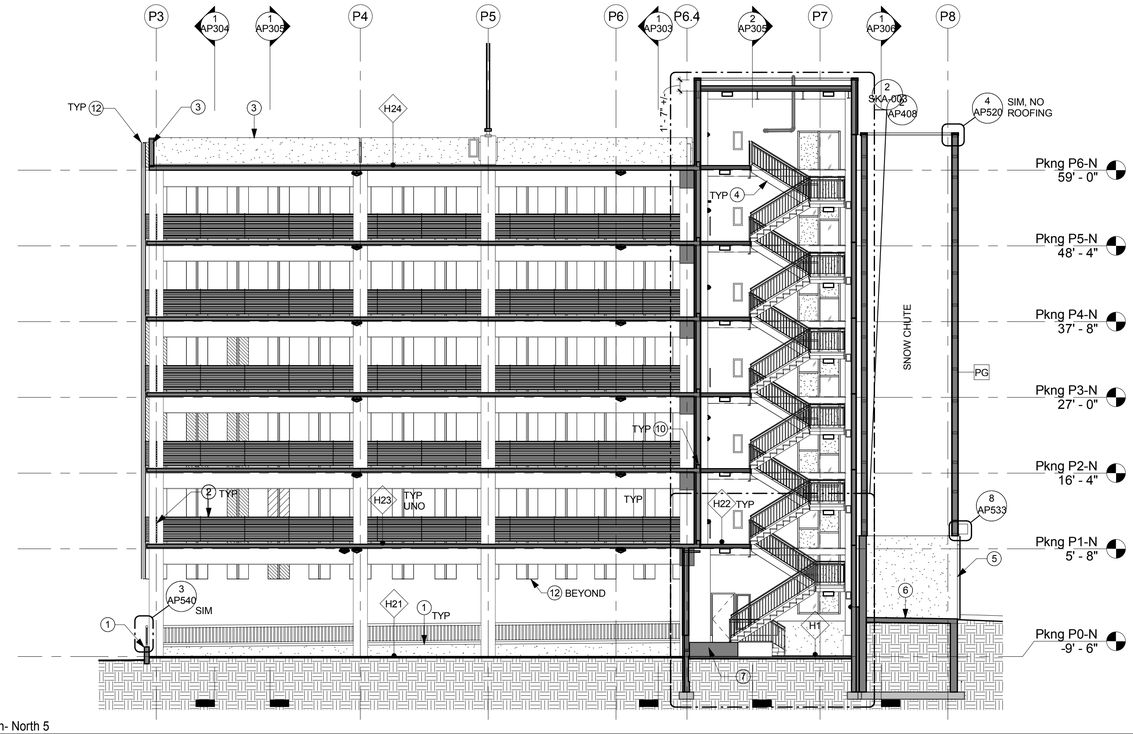

2 AP303 PG Section- North 5
Scale: 3/32" = 1'-0"

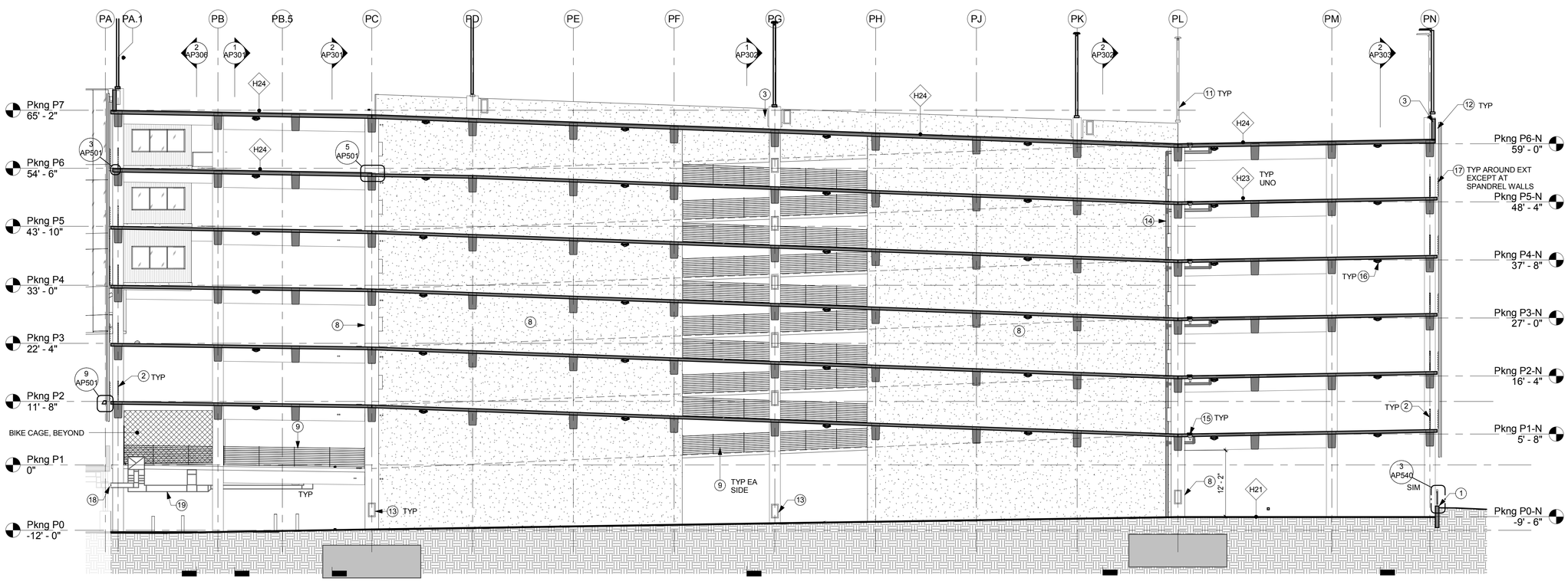

1 AP303 PG Section - West 1
Scale: 3/32" = 1'-0"

SCALE: 3/32" = 1' - 0"
0' 5'-4" 10'-8" 21'-4" 42'-8"

GENERAL PKNG SECTION NOTES

1. SEE SHEET AP301 FOR GENERAL PKNG BUILDING SECTION NOTES

SHEET NOTES

1. CONC CURB WALL W/ RAILING ABOVE, SEE ELEVATIONS
2. STEEL CABLE VEHICLE BARRIER W/ INTEGRAL HEADLIGHT SHIELD, SEE STRUC
3. MIN 3'-6" HIGH CONC WALL, SEE STRUC
4. STEEL STAIR W/ HANDRAILS & GUARDRAILS EA SIDE
5. SNOW CHUTE OVERHEAD COILING GRILLE
6. CONC SLAB, SEE STRUC
7. RAISED FLOOR, SEE STRUC
8. CONC SHEAR WALL, SEE STRUC
9. STEEL CABLE VEHICLE BARRIER, SEE STRUC
10. CONC CURB WALL AT CONC PARKING DECK EDGE, SEE STRUC, MIN 6" ABOVE DECK SURFACE, TYP AROUND
11. LIGHT POLE, SEE ELEC
12. FAÇADE ASSEMBLY
13. FEC, SURFACE MOUNT
14. RAIN LEADER VERTICAL, SEE MECH. SEE STRUC FOR DECK OPENING
15. FLOOR DRAIN, SEE MECH; LOCATE DRAIN AS CLOSE TO BEAM / WALL EDGE BELOW AS STRUC WILL ALLOW, TYP
16. LIGHT FIXTURE, REFERENCE RCP AND ELECTRICAL DRAWINGS
17. HEADLIGHT BARRIER PANELS ON BACK SIDE OF FAÇADE SUPPORT FRAMES
18. PARKING HEIGHT BAR
19. MECH EQUIP, SEE MECH

AS BUILT DRAWING
THIS DRAWING HAS BEEN PREPARED FROM CONTRACTOR FURNISHED INFORMATION. KUMIN ASSOCIATES, INC. MAKES NO WARRANTY, EXPRESSED OR IMPLIED, WITH REGARD TO THE ACCURACY OR COMPLETENESS OF THE INFORMATION NOW RECORDED IN THIS DRAWING. KUMIN ASSOCIATES, INC. WILL NOT ASSUME ANY LIABILITY, PROFESSIONAL OBLIGATION OR RISK THAT MIGHT OCCUR DUE TO THE RE-USE OF THIS INFORMATION.

KUMIN
ARCHITECTURE INTERIORS PLANNING
9101 JEWEL LAKE ROAD, SUITE 300
ANCHORAGE, AK 99502
907.272.5915 FEIN
CAA LICENSE: AC-00291
NEESE CONSTRUCTION, INC.

Childrens Dental Clinic Building

4441 Diplomacy Drive, Anchorage AK 99508

Southcentral Foundation

No.	Description	Date

Drawn By: SS
Checked By: JS
Date: 24 DEC 2018
Phase: RECORD DRAWINGS
Job No: 21519.00
SHEET TITLE: Building Sections
SHEET NO: AP303

14/2019 2:08:17 AM

RECORD DRAWINGS

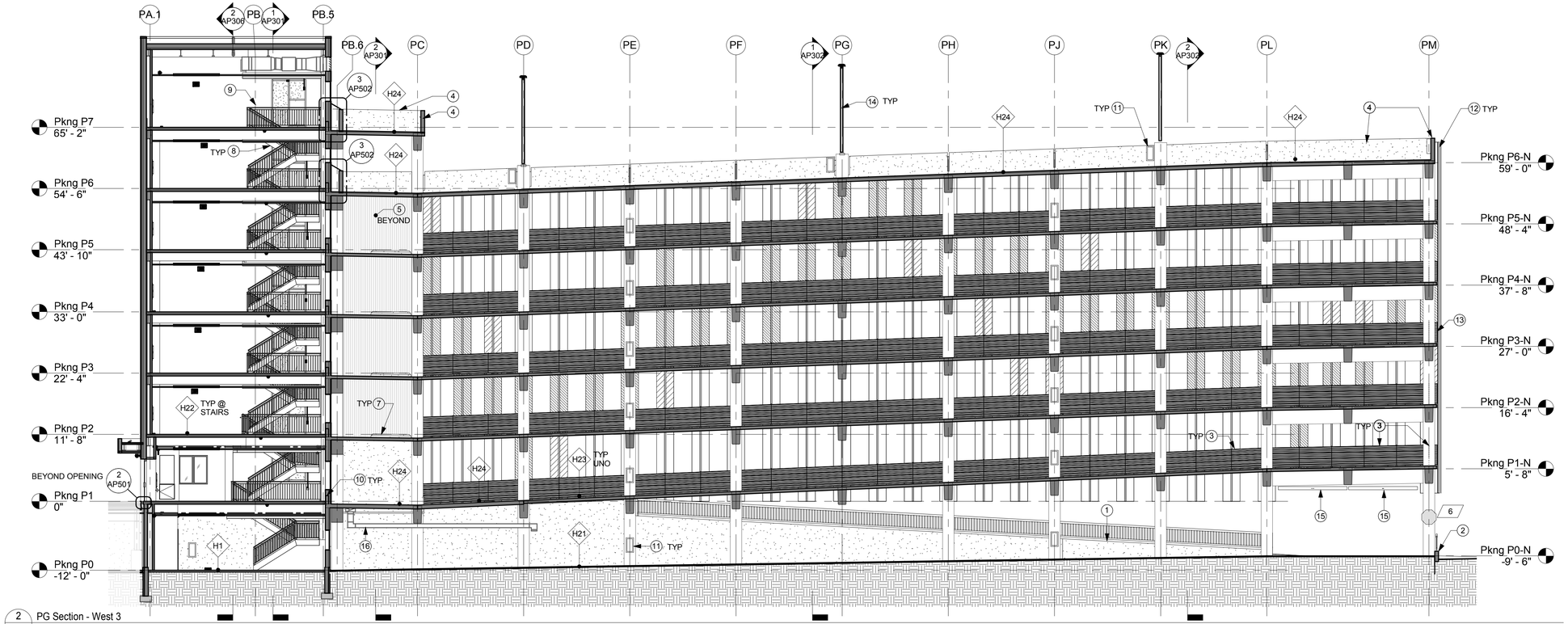

2 AP304 PG Section - West 3
Scale: 3/32" = 1'-0"

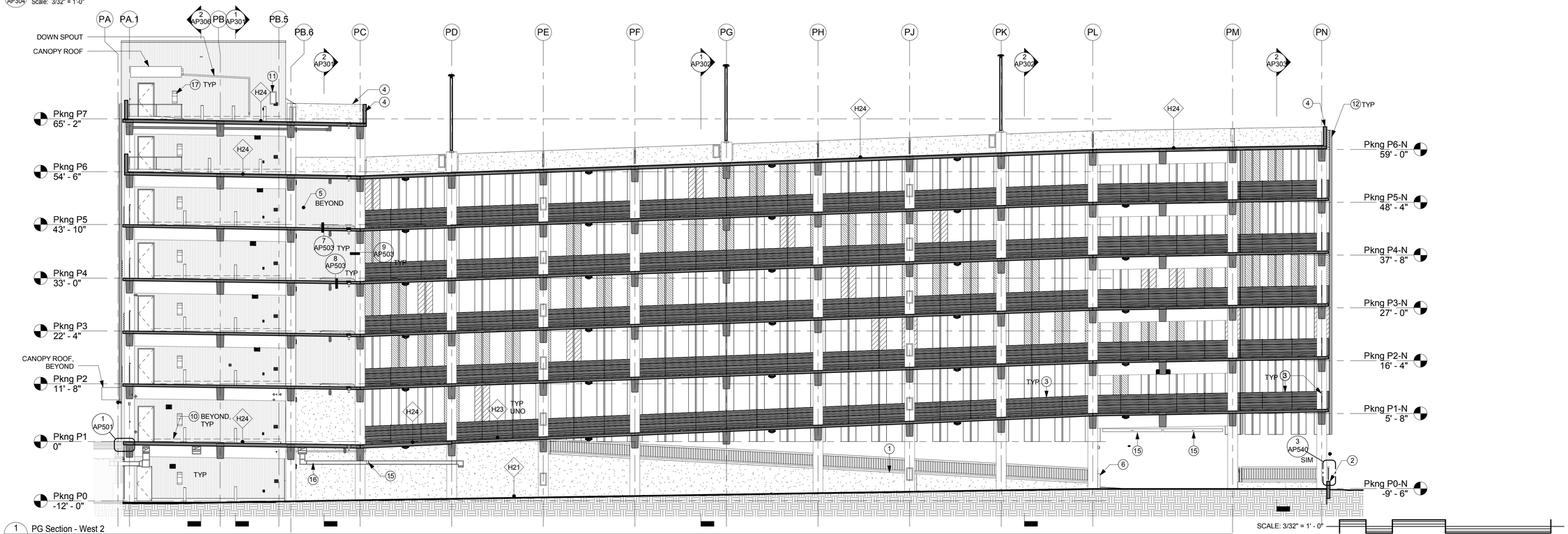

1 AP304 PG Section - West 2
Scale: 3/32" = 1'-0"

SCALE: 3/32" = 1' - 0"
0' 5'-4" 10'-8" 21'-4" 42'-8"

GENERAL PKNG SECTION NOTES

1. SEE SHEET AP301 FOR GENERAL PKNG BUILDING SECTION NOTES

SHEET NOTES

1. CONC FOUNDATION WALL, SEE STRUC. W/ RAILING ABOVE IN SOME LOCATIONS, SEE ELEVATIONS
2. CONC CURB WALL W/ RAILING ABOVE, SEE ELEVATIONS
3. STEEL CABLE VEHICLE BARRIER W/ INTEGRAL HEADLIGHT SHIELD, SEE STRUC
4. MIN 3'-6" HIGH CONC WALL, SEE STRUC
5. UPPER SNOW CHUTE WALL, SEE STRUC FOR FRAMING & INT PANELS
6. BOLLARD, SEE CIVIL & STRUC
7. CONC WHEEL STOP W/ DRAINAGE WEEPS. PROVIDE PER 2015 MOA MASS STANDARDS SECTION 30.09 CONCRETE PARKING BUMPERS, TYP
8. STEEL STAIR W/ HANDRAILS & GUARDRAILS EA SIDE
9. GUARDRAIL, TYP ALONG OPEN FLOOR EDGE
10. CONC CURB WALL AT CONC PARKING DECK EDGE, SEE STRUC, MIN 6" ABOVE DECK SURFACE, TYP AROUND
11. FEC, SURFACE MOUNT
12. FAÇADE ASSEMBLY
13. HEADLIGHT BARRIER PANELS ON BACK SIDE OF FAÇADE SUPPORT FRAMES
14. LIGHT POLE, SEE ELEC
15. PARKING HEIGHT BAR
16. MECH EQUIP, SEE MECH
17. BLUE PHONE

AS BUILT DRAWING

THIS DRAWING HAS BEEN PREPARED FROM CONTRACTOR FURNISHED INFORMATION. KUMIN ASSOCIATES, INC. MAKES NO WARRANTY, EXPRESSED OR IMPLIED, WITH REGARD TO THE ACCURACY OR COMPLETENESS OF THE INFORMATION NOW RECORDED IN THIS DRAWING. KUMIN ASSOCIATES, INC. WILL NOT ASSUME ANY LIABILITY, PROFESSIONAL OBLIGATION OR RISK THAT MIGHT OCCUR DUE TO THE RE-USE OF THIS INFORMATION.

KUMIN
ARCHITECTURE INTERIORS PLANNING
1000 W. FIREWEED LANE, SUITE 200
ANCHORAGE, AK 99503
907-272-5863 FEIN
CA LICENSE: AC-2231

NEESE CONSTRUCTION, INC.

Childrens Dental Clinic Building

4441 Diplomacy Drive, Anchorage AK 99508

Southcentral Foundation

No.	Description	Date

Drawn By: SS
Checked By: JS
Date: 24 DEC 2018
Phase: RECORD DRAWINGS
Job No: 21519.00
SHEET TITLE: Building Sections

SHEET NO:

AP304

1/4/2019 2:08:25 AM

RECORD DRAWINGS

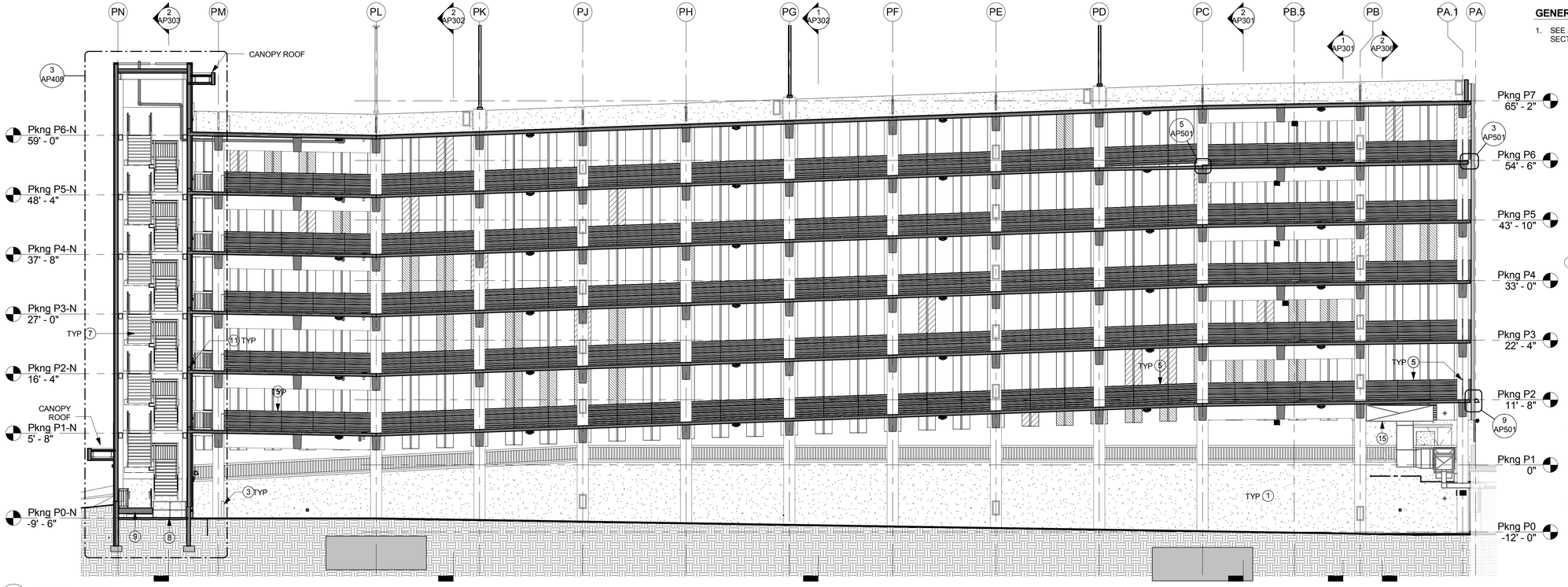

2 AP305 PG Section - East 2
Scale: 3/32" = 1'-0"

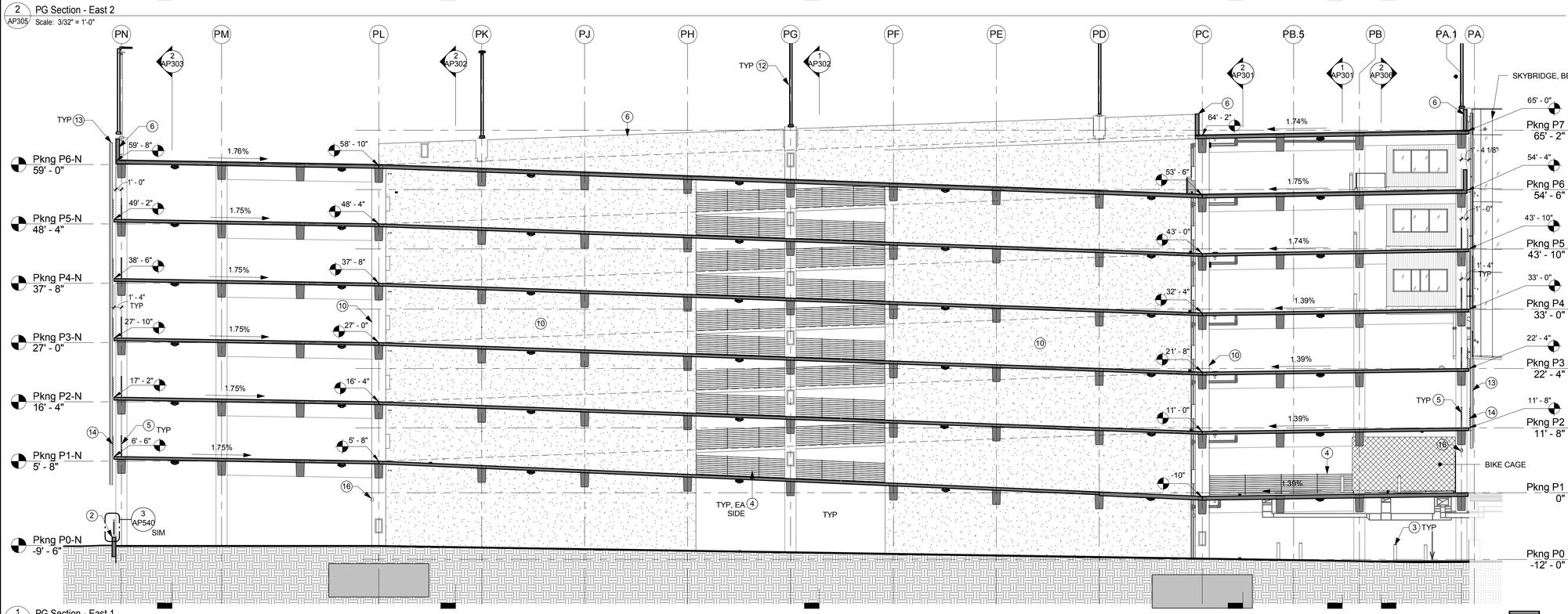

1 AP305 PG Section - East 1
Scale: 3/32" = 1'-0"

SCALE: 3/32" = 1' - 0"
0' 5'-4" 10'-8" 21'-4" 42'-8"

RECORD DRAWINGS

GENERAL PKNG SECTION NOTES

1. SEE SHEET AP301 FOR GENERAL PKNG BUILDING SECTION NOTES

SHEET NOTES

1. CONC FOUNDATION WALL, SEE STRUC. W/ RAILING ABOVE IN SOME LOCATIONS, SEE ELEVATIONS
2. CONC CURB WALL W/ RAILING ABOVE, SEE ELEVATIONS
3. BOLLARD, SEE CIVIL & STRUC
4. STEEL CABLE VEHICLE BARRIER, SEE STRUC
5. STEEL CABLE VEHICLE BARRIER W/ INTEGRAL HEADLIGHT SHIELD, SEE STRUC
6. MIN 3'-6" HIGH CONC WALL, SEE STRUC
7. STEEL STAIR W/ HANDRAILS & GUARDRAILS EA SIDE
8. CONC SLAB, SEE STRUC
9. RAISED FLOOR, SEE STRUC
10. CONC SHEAR WALL, SEE STRUC
11. CONC CURB WALL AT CONC PARKING DECK EDGE, SEE STRUC, MIN 6" ABOVE DECK SURFACE TYP AROUND
12. LIGHT POLE, SEE ELEC
13. FAÇADE ASSEMBLY
14. HEADLIGHT BARRIER PANELS ON BACK SIDE OF FAÇADE SUPPORT FRAMES
15. MECH EQUIP, SEE MECH
16. PARKING HEIGHT BAR

AS BUILT DRAWING
THIS DRAWING HAS BEEN PREPARED FROM CONTRACTOR FURNISHED INFORMATION. KUMIN ASSOCIATES, INC. MAKES NO WARRANTY, EXPRESSED OR IMPLIED, WITH REGARD TO THE ACCURACY OR COMPLETENESS OF THE INFORMATION NOW RECORDED IN THIS DRAWING. KUMIN ASSOCIATES, INC. WILL NOT ASSUME ANY LIABILITY, PROFESSIONAL OBLIGATION OR RISK THAT MIGHT OCCUR DUE TO THE RE-USE OF THIS INFORMATION.

KUMIN
ARCHITECTURE INTERIORS PLANNING
1049 W 5th AVENUE, ANCHORAGE, AK 99501
907-272-5863 FEIN
CA LICENSE: AC-25231
NEESE CONSTRUCTION, INC.

Childrens Dental Clinic Building

4441 Diplomacy Drive, Anchorage AK 99508
Southcentral Foundation

No.	Description	Date

Drawn By: SS
Checked By: JS
Date: 24 DEC 2018
Phase: RECORD DRAWINGS
Job No: 21519.00
SHEET TITLE: Building Sections

SHEET NO:
AP305

14-2019 2:08:34 AM

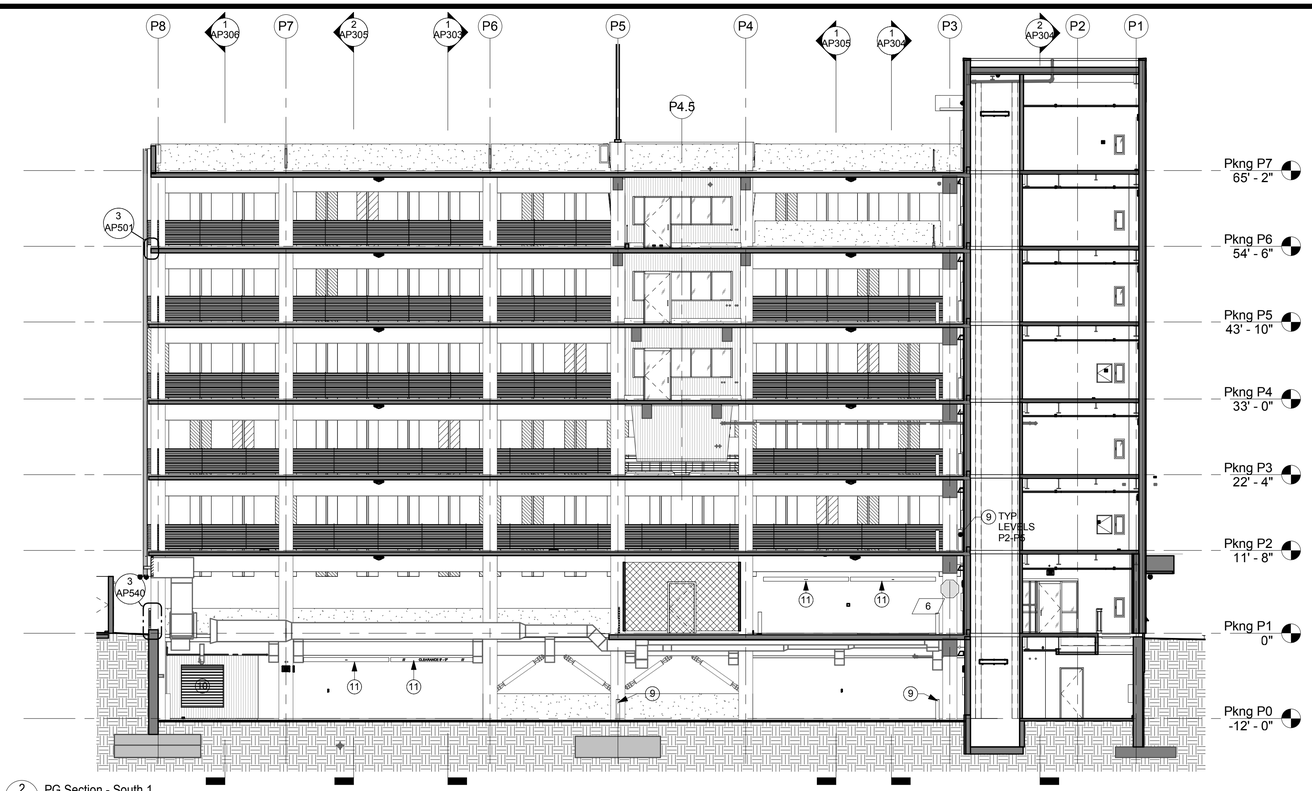

2 AP306 PG Section - South 1
Scale: 3/32" = 1'-0"

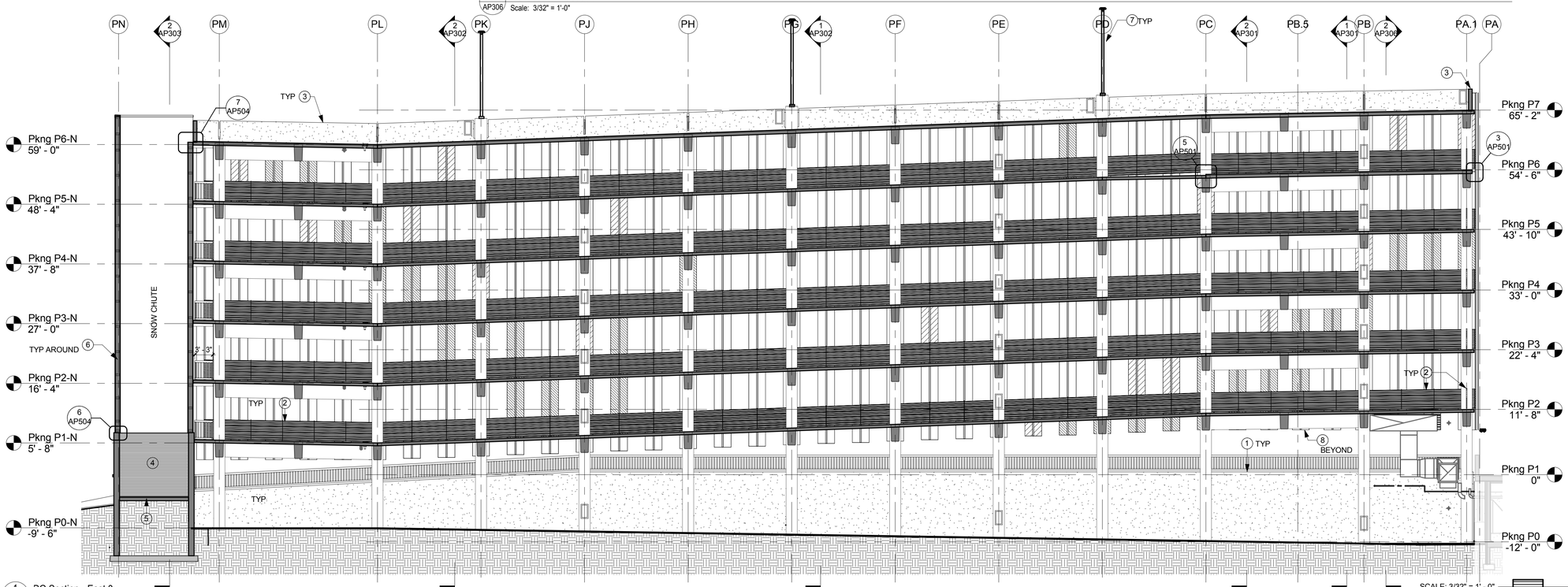

1 AP306 PG Section - East 3
Scale: 3/32" = 1'-0"

SCALE: 3/32" = 1' - 0"
0' 5'-4" 10'-8" 21'-4" 42'-8"

GENERAL PKNG SECTION NOTES

1. SEE SHEET AP301 FOR GENERAL PKNG BUILDING SECTION NOTES

SHEET NOTES

1. CONC FOUNDATION WALL, SEE STRUC. W/ RAILING ABOVE IN SOME LOCATIONS, SEE ELEVATIONS
2. STEEL CABLE VEHICLE BARRIER W/ INTEGRAL HEADLIGHT SHIELD, SEE STRUC
3. MIN 3'-6" HIGH CONC WALL, SEE STRUC
4. SNOW CHUTE OVERHEAD COILING GRILLE
5. CONC SLAB, SEE STRUC
6. UPPER SNOW CHUTE WALL, SEE STRUC FOR FRAMING & INT PANELS
7. LIGHT POLE, SEE ELEC
8. FAÇADE ASSEMBLY
9. BOLLARD, SEE CIVIL & STRUC
10. LOUVER, SEE MECH
11. PARKING HEIGHT BAR

AS BUILT DRAWING
THIS DRAWING HAS BEEN PREPARED FROM CONTRACTOR FURNISHED INFORMATION. KUMIN ASSOCIATES, INC. MAKES NO WARRANTY, EXPRESSED OR IMPLIED, WITH REGARD TO THE ACCURACY OR COMPLETENESS OF THE INFORMATION NOW RECORDED IN THIS DRAWING. KUMIN ASSOCIATES, INC. WILL NOT ASSUME ANY LIABILITY, PROFESSIONAL OBLIGATION OR RISK THAT MIGHT OCCUR DUE TO THE RE-USE OF THIS INFORMATION.

KUMIN
ARCHITECTURE INTERIORS PLANNING
9101 JEWEL LAKE ROAD
ANCHORAGE, AK 99502
907-272-5915 FEDEX
CAA LICENSE: AC-2231

NEESE CONSTRUCTION, INC.

Childrens Dental Clinic Building

4441 Diplomacy Drive, Anchorage AK 99508
Southcentral Foundation

No.	Description	Date

Drawn By: SS
Checked By: JS
Date: 24 DEC 2018
Phase: RECORD DRAWINGS
Job No: 21519.00
SHEET TITLE: Building Sections

SHEET NO:
AP306

4/4/2019 2:08:41 AM

RECORD DRAWINGS

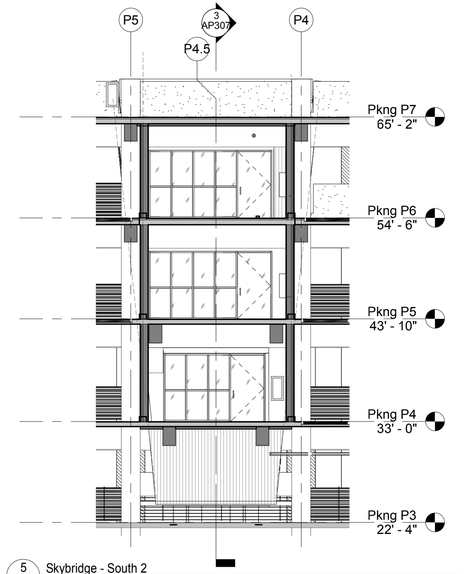

5 AP307 Skybridge - South 2
Scale: 1/8" = 1'-0"

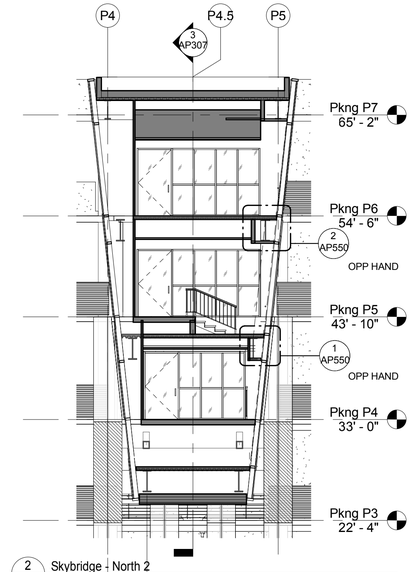

2 AP307 Skybridge - North 2
Scale: 1/8" = 1'-0"

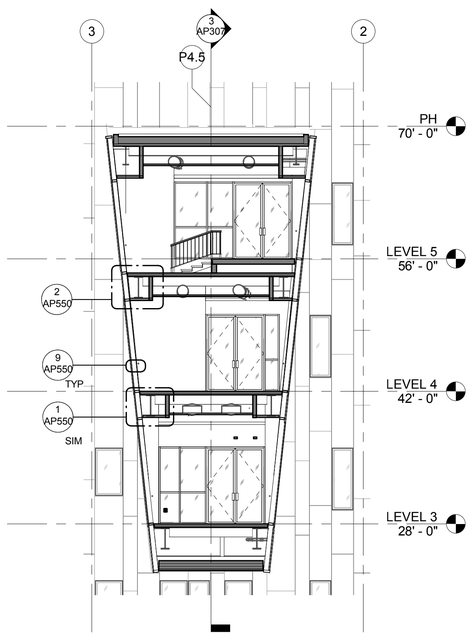

4 AP307 Skybridge - South 1
Scale: 1/8" = 1'-0"

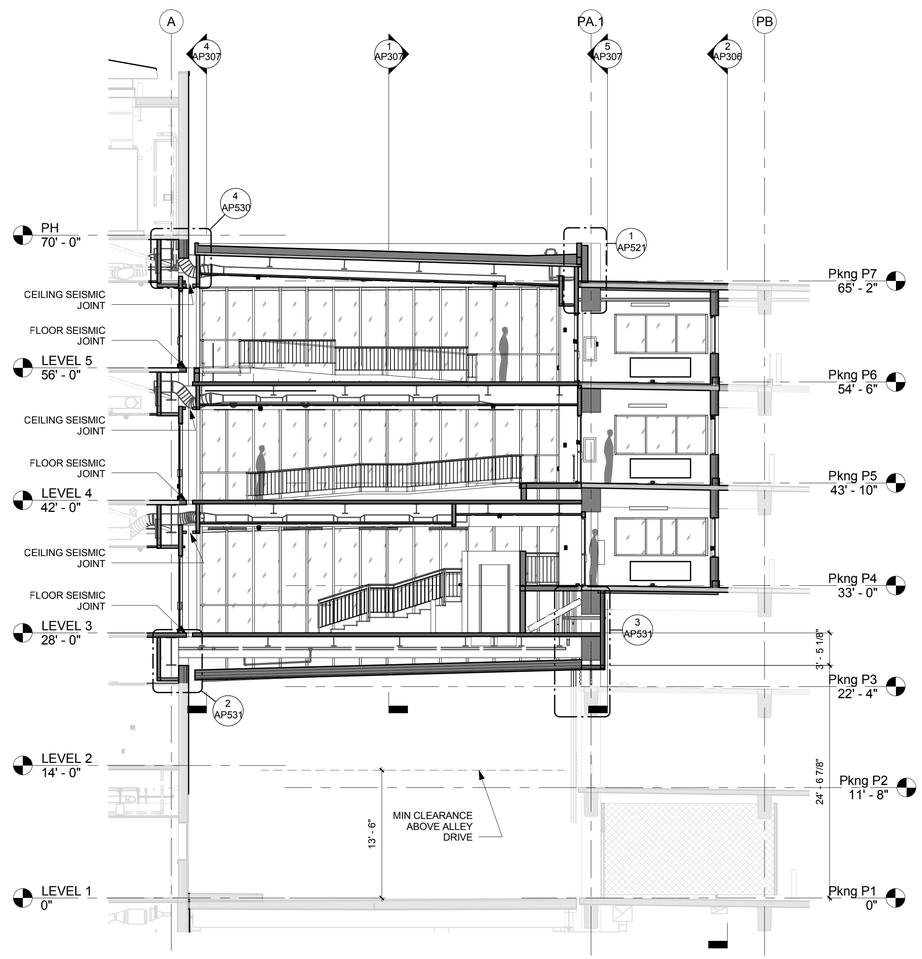

3 AP307 Skybridge - West 1
Scale: 1/8" = 1'-0"

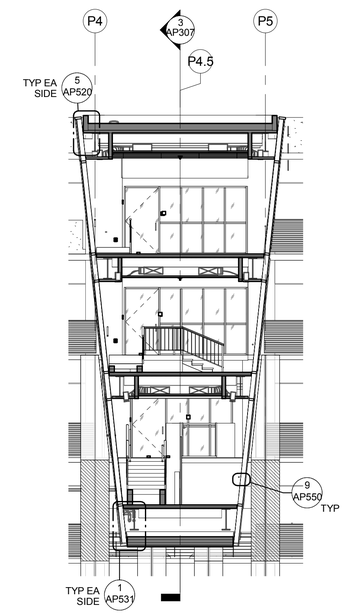

1 AP307 Skybridge - North 1
Scale: 1/8" = 1'-0"

SCALE: 1/8" = 1' - 0"
0' 4' 8' 16' 32'

GENERAL PKNG SECTION NOTES

1. SEE SHEET AP301 FOR GENERAL PKNG BUILDING SECTION NOTES

AS BUILT DRAWING

THIS DRAWING HAS BEEN PREPARED FROM CONTRACTOR FURNISHED INFORMATION. KUMIN ASSOCIATES, INC. MAKES NO WARRANTY, EXPRESSED OR IMPLIED, WITH REGARD TO THE ACCURACY OR COMPLETENESS OF THE INFORMATION NOW RECORDED IN THIS DRAWING. KUMIN ASSOCIATES, INC. WILL NOT ASSUME ANY LIABILITY, PROFESSIONAL OBLIGATION OR RISK THAT MIGHT OCCUR DUE TO THE RE-USE OF THIS INFORMATION.

KUMIN
ARCHITECTURE INTERIORS PLANNING
1400 W BENSON BLVD, SUITE 400
ANCHORAGE, AK 99503
907.272.5863 CA LICENSE: AC2221

NEESE CONSTRUCTION, INC.

Childrens Dental Clinic Building

4441 Diplomacy Drive, Anchorage AK 99508

Southcentral Foundation

No.	Description	Date

Drawn By: SS
Checked By: JS
Date: 24 DEC 2018
Phase: RECORD DRAWINGS
Job No: 21519.00
SHEET TITLE: Skybridge Sections

SHEET NO:

AP307

1/4/2019 2:08:50 AM

RECORD DRAWINGS

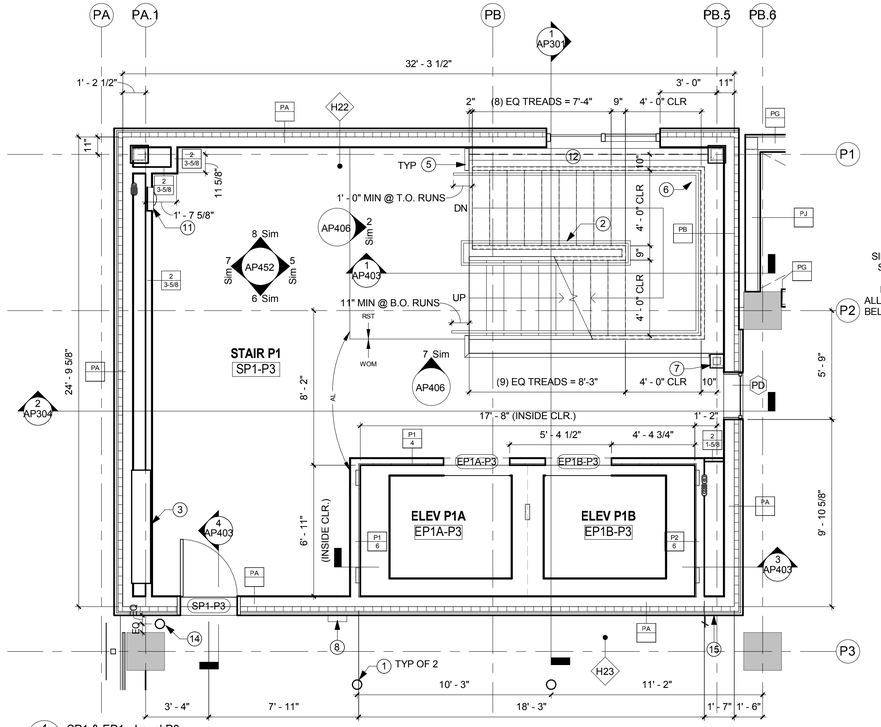

4 AP401 SP1 & EP1 - Level P3
Scale: 1/4" = 1'-0"

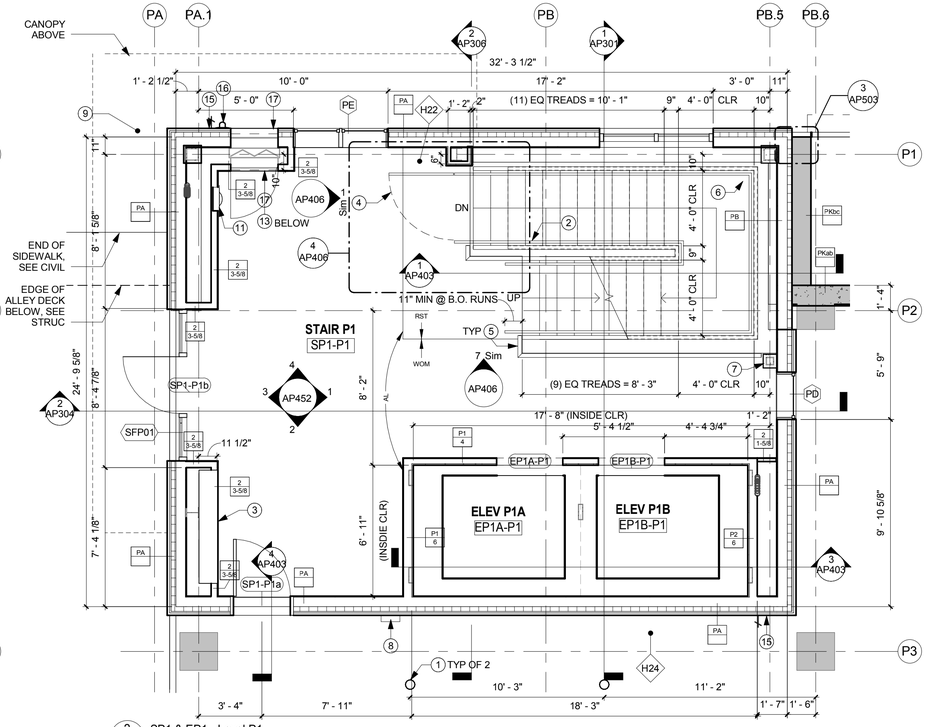

2 AP401 SP1 & EP1 - Level P1
Scale: 1/4" = 1'-0"

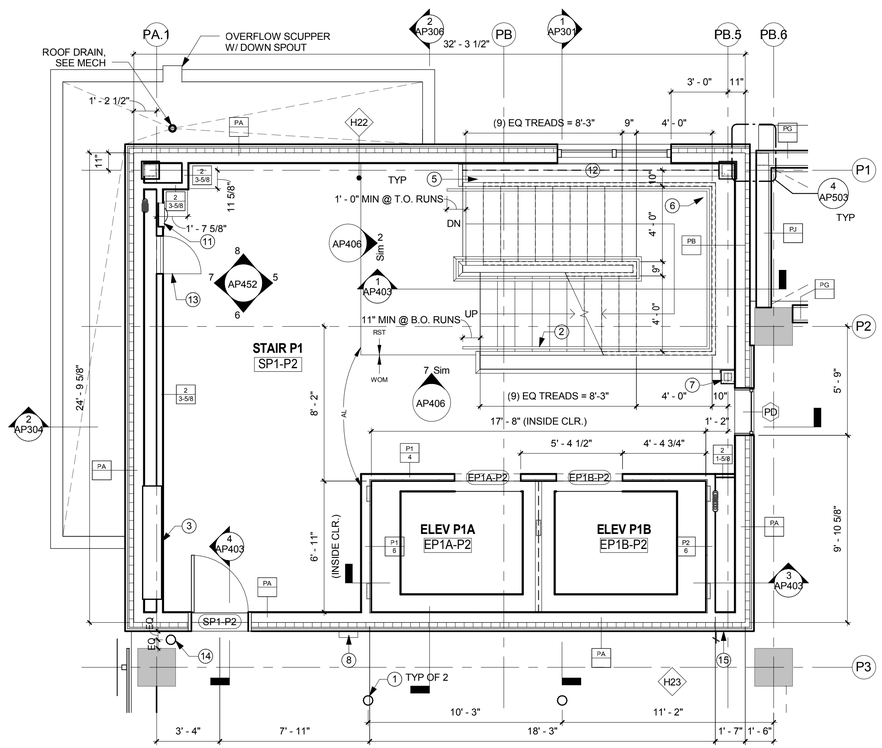

3 AP401 SP1 & EP1 - Level P2
Scale: 1/4" = 1'-0"

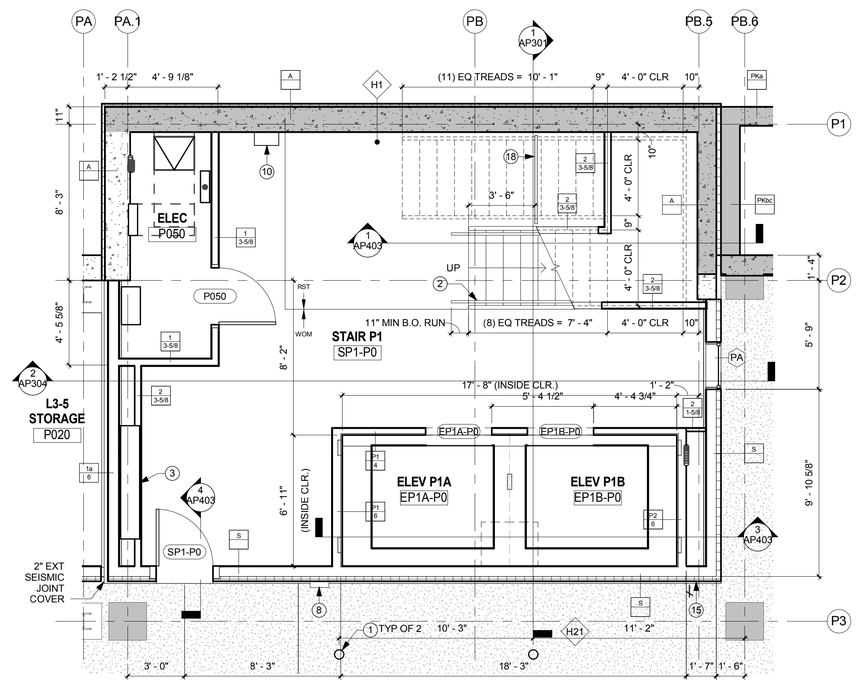

1 AP401 SP1 & EP1 - Level P0
Scale: 1/4" = 1'-0"

SCALE: 1/4" = 1' - 0"

RECORD DRAWINGS

GENERAL STAIR & ELEVATOR NOTES

- SEE SHEET AP035 FOR LOCATIONS OF FIRE RATED ELEMENT PROTECTION, TYP
- SEE OVERALL PLANS, AP11_ SERIES SHEETS, FOR STRIPING, TYP

SHEET NOTES

1. BOLLARD, SEE CIVIL & STRUC
2. INTERIOR HANDRAIL
3. MECH EQUIP, SEE MECH
4. NON-LATCHING SELF-CLOSING SWING GATE
5. GUARDRAIL
6. STANDPIPE RISER LOCATION, COORD W/ MECH
7. STRUCTURE, SEE FIRE RATING DETAILS & STRUC
8. BLUE PHONE
9. FDC, SEE CIVIL & MECH
10. FEC, SURFACE MOUNT
11. FEC, SEMI-RECESSED
12. 2-HR GWB WRAPPED BEAM
13. ACCESS PANEL
14. BOLLARD MIN. 6" DIA, 42" MIN TALL ABOVE ADJACENT PAVEMENT SURFACES, SEE STRUC
15. HOSE BIBB, SEE MECH
16. WALL SCUPPER, SEE MECH
17. LOUVER, SEE MECH
18. HEAD HEIGHT BARRIER RAIL

AS BUILT DRAWING

THIS DRAWING HAS BEEN PREPARED FROM CONTRACTOR FURNISHED INFORMATION. KUMIN ASSOCIATES, INC. MAKES NO WARRANTY, EXPRESSED OR IMPLIED, WITH REGARD TO THE ACCURACY OR COMPLETENESS OF THE INFORMATION NOW RECORDED IN THIS DRAWING. KUMIN ASSOCIATES, INC. WILL NOT ASSUME ANY LIABILITY, PROFESSIONAL OBLIGATION OR RISK THAT MIGHT OCCUR DUE TO THE RE-USE OF THIS INFORMATION.

KUMIN
ARCHITECTURE INTERIORS PLANNING
9101 ARCTIC BLVD. ANCHORAGE, AK 99515
907.272.5863 FEIN
CA LICENSE: AC-25231

NEESE CONSTRUCTION, INC.

Childrens Dental Clinic Building

4441 Diplomacy Drive, Anchorage AK 99508

Southcentral Foundation

No.	Description	Date

Drawn By: SS, JL
Checked By: JS
Date: 24 DEC 2018
Phase: RECORD DRAWINGS
Job No: 21519.00
SHEET TITLE: Pkng - Stair SP1 & Elevator EP1 - Enlarged Plans

SHEET NO:

AP401

14/2019 2:10:44 AM

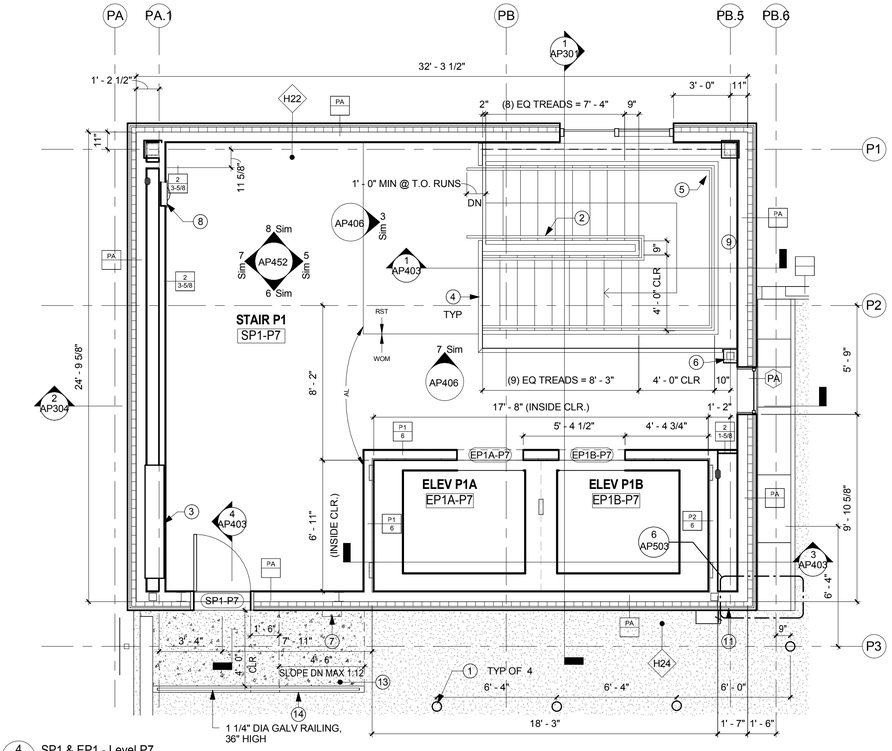

4 AP402 SP1 & EP1 - Level P7
Scale: 1/4" = 1'-0"

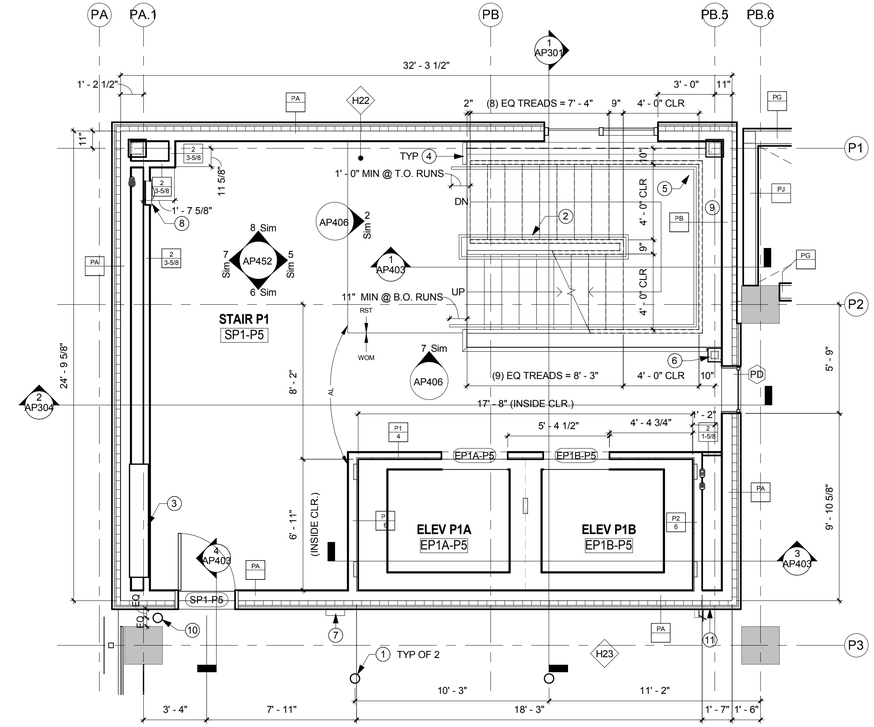

2 AP402 SP1 & EP1 - Level P5
Scale: 1/4" = 1'-0"

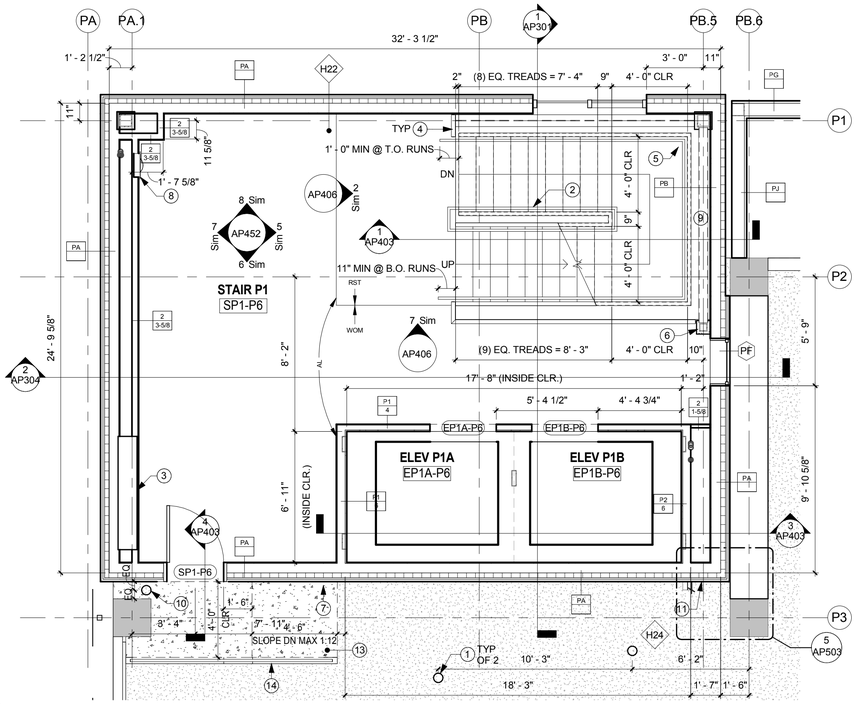

3 AP402 SP1 & EP1 - Level P6
Scale: 1/4" = 1'-0"

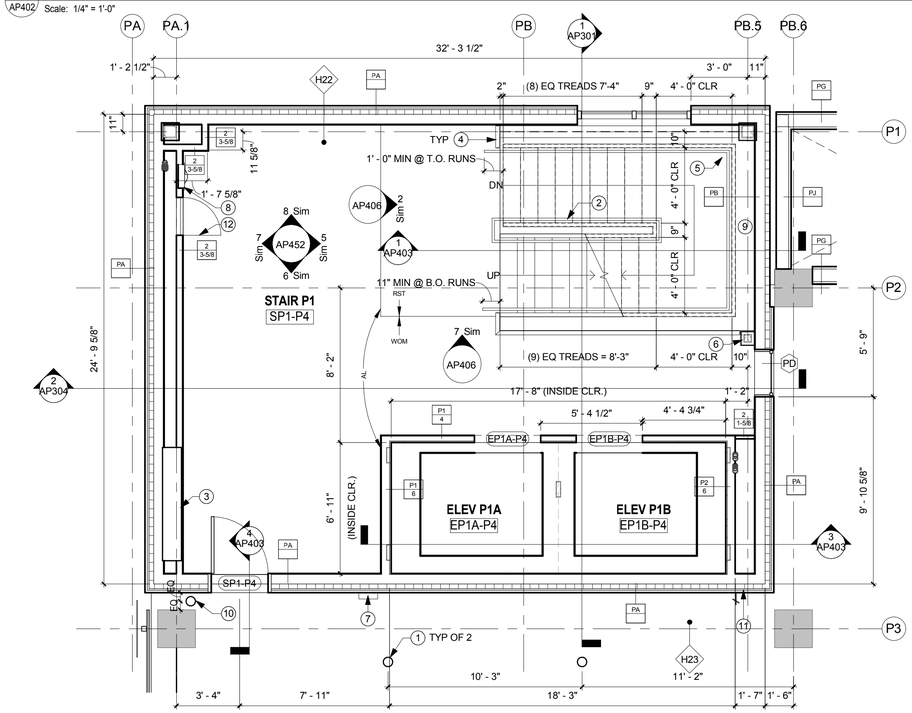

1 AP402 SP1 & EP1 - Level P4
Scale: 1/4" = 1'-0"

GENERAL STAIR & ELEVATOR NOTES

1. SEE SHEET AP401 FOR GENERAL STAIR AND ELEVATOR NOTES

SHEET NOTES

1. BOLLARD, SEE CIVIL & STRUC
2. INTERIOR HANDRAIL
3. MECH EQUIP, SEE MECH
4. GUARDRAIL
5. STANDPIPE RISER LOCATION, COORD W/ MECH
6. STRUCTURE, SEE FIRE RATING DETAILS & STRUC
7. BLUE PHONE
8. FEC, SEMI-RECESSED
9. 2-HR GWB WRAPPED BEAM
10. BOLLARD MIN. 6" DIA, 42" MIN TALL ABOVE ADJACENT PAVEMENT SURFACES, SEE STRUC
11. HOSE BIBB, SEE MECH
12. ACCESS PANEL
13. OVERPOURED CONCRETE LANDING AND RAMP IN LIEU OF FUTURE ASPHALT TOPPING
14. PARTIAL HEIGHT 4" CONC CURB WALL, T.O.C. +6" ABOVE HIGHEST ADJACENT SURFACE

SCALE: 1/4" = 1' - 0"

RECORD DRAWINGS

AS BUILT DRAWING

THIS DRAWING HAS BEEN PREPARED FROM CONTRACTOR FURNISHED INFORMATION. KUMIN ASSOCIATES, INC. MAKES NO WARRANTY, EXPRESSED OR IMPLIED, WITH REGARD TO THE ACCURACY OR COMPLETENESS OF THE INFORMATION NOW RECORDED IN THIS DRAWING. KUMIN ASSOCIATES, INC. WILL NOT ASSUME ANY LIABILITY, PROFESSIONAL OBLIGATION OR RISK THAT MIGHT OCCUR DUE TO THE RE-USE OF THIS INFORMATION.

KUMIN
ARCHITECTURE INTERIORS PLANNING
9101 JEWEL LAKE ROAD, SUITE 300
ANCHORAGE, AK 99502
907.272.5863 FF.200

NEESE CONSTRUCTION, INC.

Childrens Dental Clinic Building

4441 Diplomacy Drive, Anchorage AK 99508

Southcentral Foundation

No.	Description	Date

Drawn By: SS, JL
Checked By: JS
Date: 24 DEC 2018
Phase: RECORD DRAWINGS
Job No: 21519.00
SHEET TITLE: Pkng - Stair SP1 & Elevator EP1 - Enlarged Plans

SHEET NO:

AP402

1/4/2019 2:10:49 AM

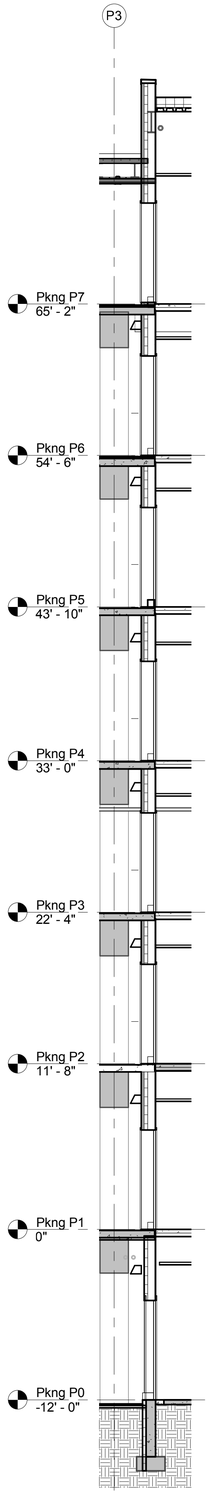

4 AP403 PG Stair 1 - North
Scale: 3/16" = 1'-0"

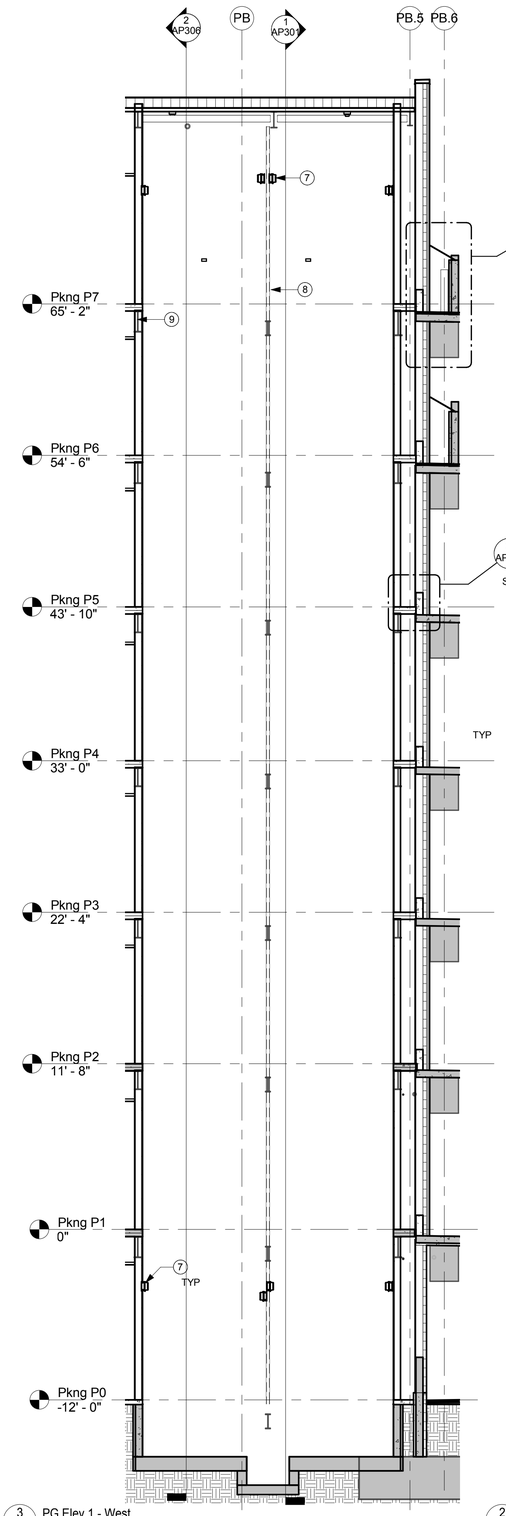

3 AP403 PG Elev 1 - West
Scale: 3/16" = 1'-0"

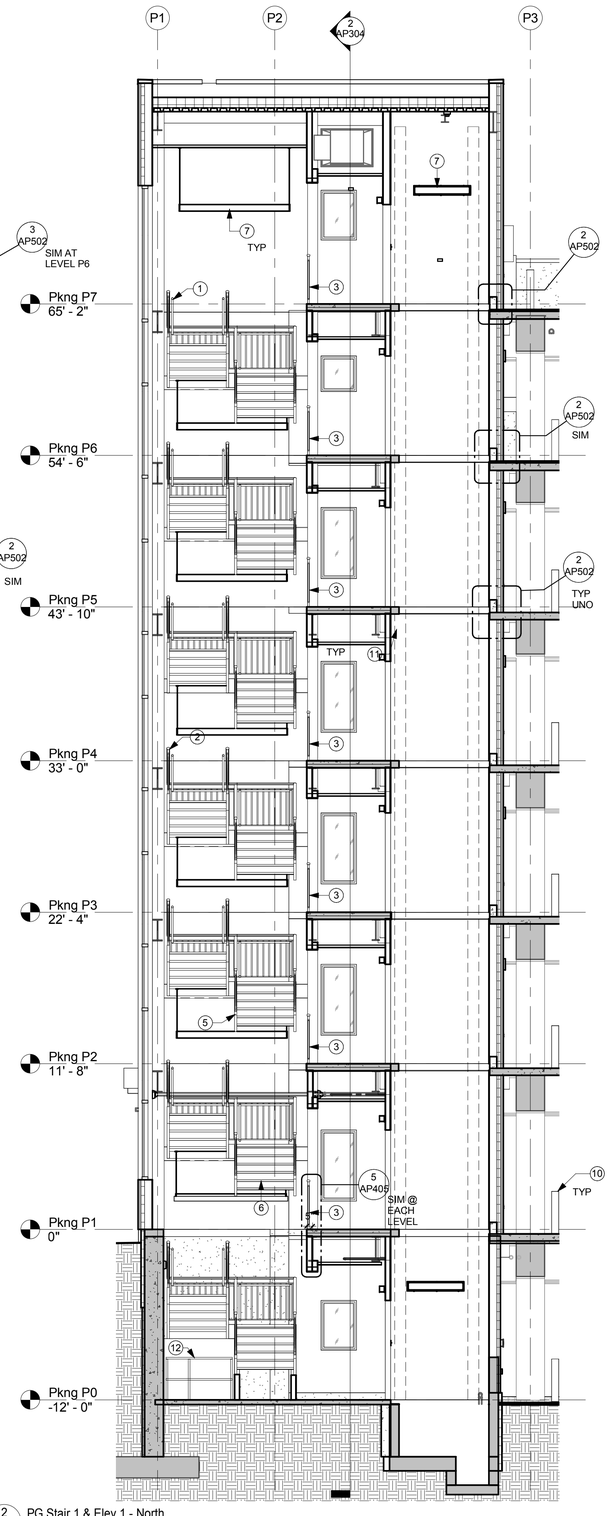

2 AP403 PG Stair 1 & Elev 1 - North
Scale: 3/16" = 1'-0"

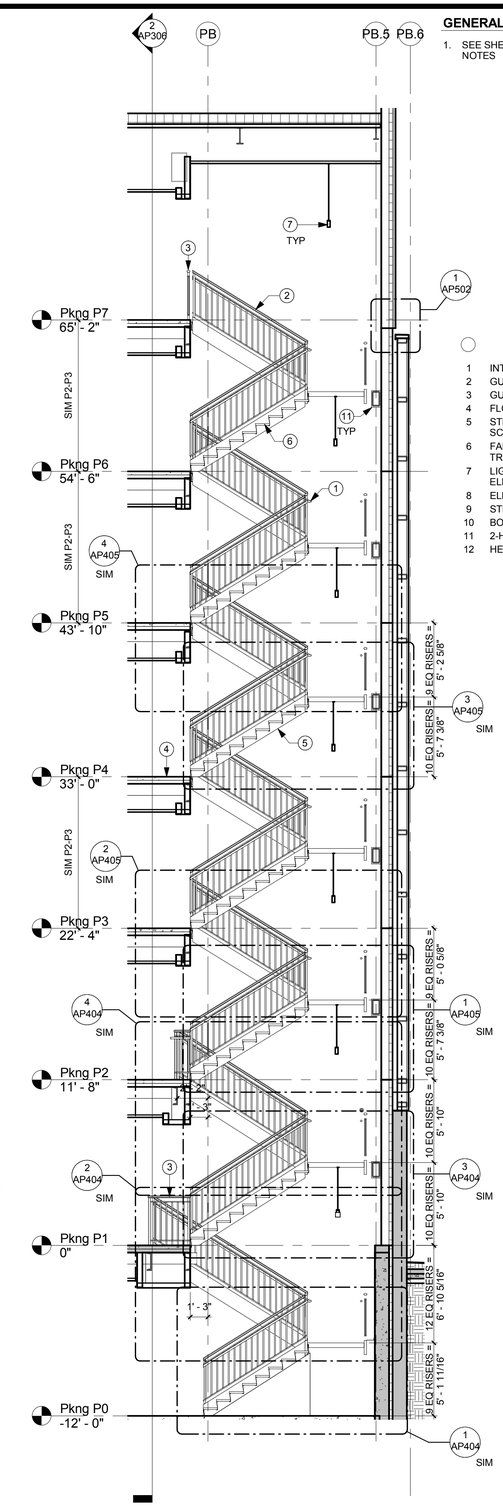

1 AP403 PG Stair 1 - West
Scale: 3/16" = 1'-0"

GENERAL STAIR & ELEVATOR NOTES

1. SEE SHEET AP401 FOR GENERAL STAIR AND ELEVATOR NOTES

SHEET NOTES

1 INTERIOR HANDRAIL
2 GUARDRAIL
3 GUARDRAIL, TYP ALONG OPEN FLOOR EDGE
4 FLOOR ASSEMBLY, SEE STRUC
5 STL STAIR STRINGER, SEE STRUC. FINISH AS SCHEDULED
6 FABRICATED METAL STAIRS W/ CONCRETE TREADS
7 LIGHT FIXTURE, REFERENCE RCP AND ELECTRICAL DRAWINGS
8 ELEVATOR RAIL SUPPORT, SEE STRUCTURAL
9 STEEL BEAM, SEE STRUCTURAL
10 BOLLARD, SEE CIVIL & STRUC
11 2-HR GWB WRAPPED BEAM
12 HEAD HEIGHT BARRIER RAIL

AS BUILT DRAWING
THIS DRAWING HAS BEEN PREPARED FROM CONTRACTOR FURNISHED INFORMATION. KUMIN ASSOCIATES, INC. MAKES NO WARRANTY, EXPRESSED OR IMPLIED, WITH REGARD TO THE ACCURACY OR COMPLETENESS OF THE INFORMATION NOW RECORDED IN THIS DRAWING. KUMIN ASSOCIATES, INC. WILL NOT ASSUME ANY LIABILITY, PROFESSIONAL OBLIGATION OR RISK THAT MIGHT OCCUR DUE TO THE RE-USE OF THIS INFORMATION.

KUMIN
ARCHITECTURE INTERIORS PLANNING
9101 JEWEL LAKE ROAD, SUITE 300
ANCHORAGE, AK 99502
907.272.5863 FEIN
CA LICENSE: AC-25231

NEESE CONSTRUCTION, INC.

Childrens Dental Clinic Building

4441 Diplomacy Drive, Anchorage AK 99508
Southcentral Foundation

No.	Description	Date

Drawn By: SS, JL
Checked By: JS
Date: 24 DEC 2018
Phase: RECORD DRAWINGS
Job No: 21519.00
SHEET TITLE: Pkng - Stair SP1 & Elevator EP1 - Sections

SHEET NO:
AP403

14/2019 2:10:55 AM

RECORD DRAWINGS

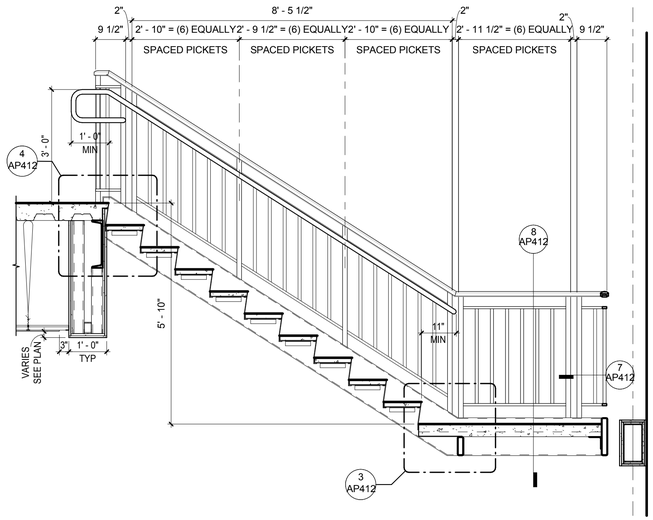

NOTE: PICKETS SPACING SHALL NOT EXCEED 3 7/8" MAXIMUM.

4 AP404 PG - Stair SP1 - Intermediate Landing to Level P2 - Section/Elevation
Scale: 1/2" = 1'-0"

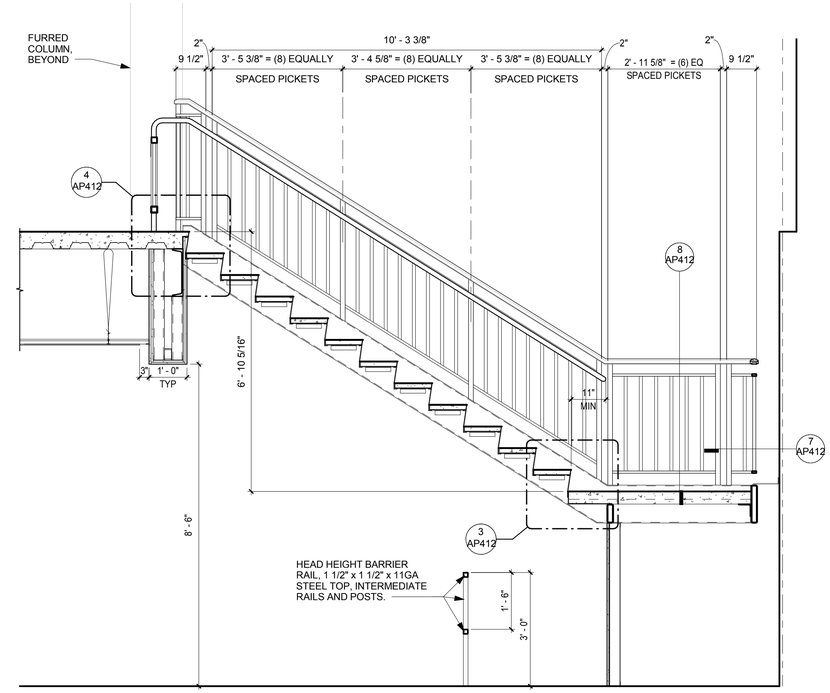

NOTE: PICKETS SPACING SHALL NOT EXCEED 3 7/8" MAXIMUM.

2 AP404 PG - Stair SP1 - Intermediate Landing to Level P1 - Section/Elevation
Scale: 1/2" = 1'-0"

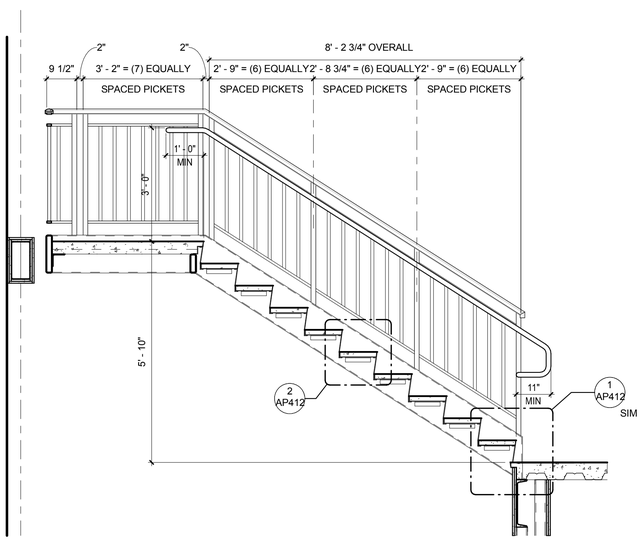

NOTE: PICKETS SPACING SHALL NOT EXCEED 3 7/8" MAXIMUM.

3 AP404 PG - Stair SP1 - Level P1 to Intermediate Landing - Section/Elevation
Scale: 1/2" = 1'-0"

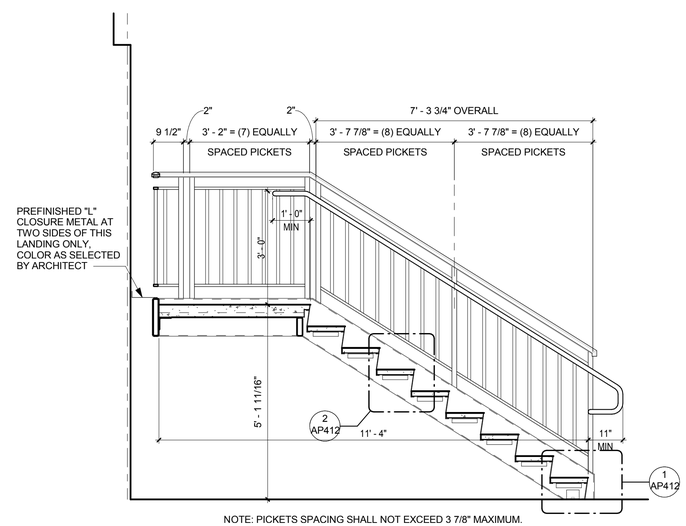

NOTE: PICKETS SPACING SHALL NOT EXCEED 3 7/8" MAXIMUM.

1 AP404 PG - Stair SP1 - Level P0 to Intermediate Landing - Section/Elevation
Scale: 1/2" = 1'-0"

RECORD DRAWINGS

AS BUILT DRAWING

THIS DRAWING HAS BEEN PREPARED FROM CONTRACTOR FURNISHED INFORMATION. KUMIN ASSOCIATES, INC. MAKES NO WARRANTY, EXPRESSED OR IMPLIED, WITH REGARD TO THE ACCURACY OR COMPLETENESS OF THE INFORMATION NOW RECORDED IN THIS DRAWING. KUMIN ASSOCIATES, INC. WILL NOT ASSUME ANY LIABILITY, PROFESSIONAL OBLIGATION OR RISK THAT MIGHT OCCUR DUE TO THE RE-USE OF THIS INFORMATION.

KUMIN
ARCHITECTURE INTERIORS PLANNING
9101 JEWEL LAKE ROAD, STE 200
ANCHORAGE, AK 99502
907.272.5863 FAX 272.5893
CAA LICENSE: AC-00201

NEESE CONSTRUCTION, INC.

Childrens Dental Clinic Building

4441 Diplomacy Drive, Anchorage AK 99508
Southcentral Foundation

No.	Description	Date

Drawn By: JL
Checked By: JS
Date: 24 DEC 2018
Phase: RECORD DRAWINGS
Job No: 21519.00
SHEET TITLE: Pkng - Stair SP1 - Enlarged Sections/Elevations

SHEET NO:

AP404

1/4/2019 2:10:59 AM

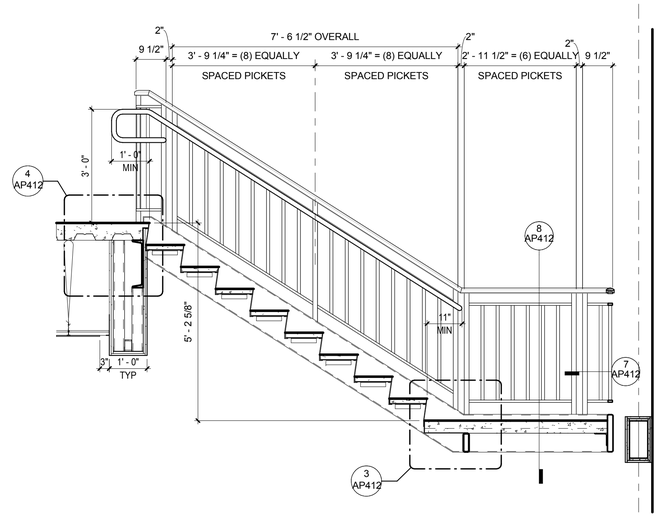

NOTE: PICKETS SPACING SHALL NOT EXCEED 3 7/8" MAXIMUM.

4 AP405 PG - Stair SP1 - Intermediate Landing to Level P5 - Section/Elevation
Scale: 1/2" = 1'-0"

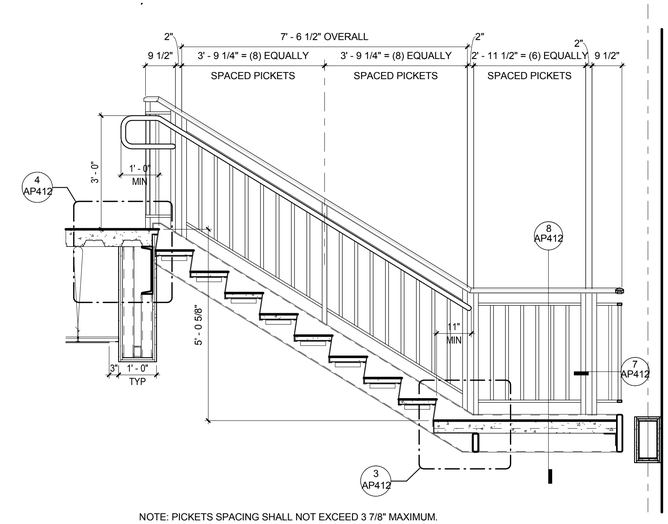

NOTE: PICKETS SPACING SHALL NOT EXCEED 3 7/8" MAXIMUM.

SIMILAR BETWEEN LEVELS P3-P4 AND P5-P7.

2 AP405 PG - Stair SP1 - Intermediate Landing to Level P3 - Section/Elevation
Scale: 1/2" = 1'-0"

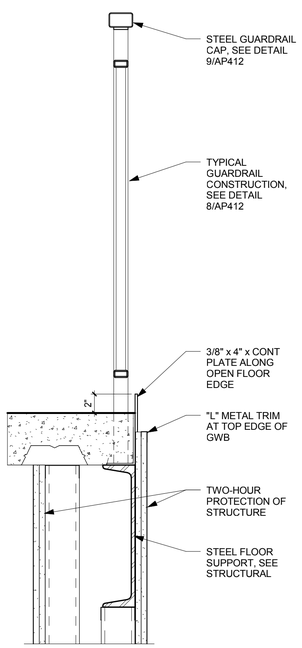

5 AP405 PG - Guardrail @ Landing Section - Stair SP1
Scale: 1 1/2" = 1'-0"

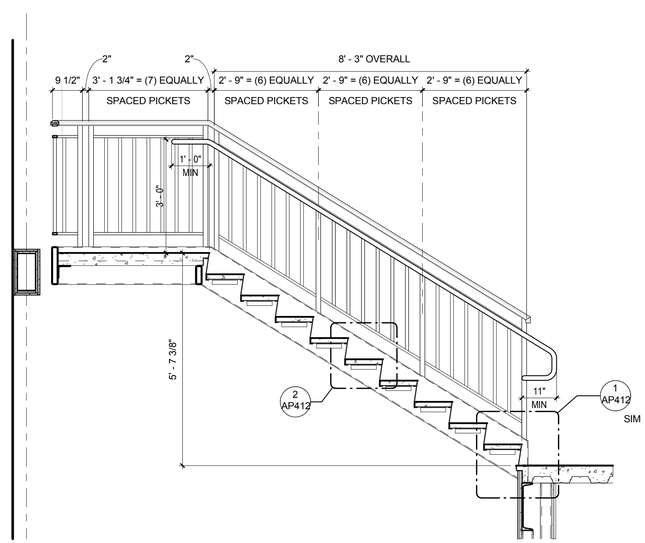

NOTE: PICKETS SPACING SHALL NOT EXCEED 3 7/8" MAXIMUM.

3 AP405 PG - Stair SP1 - Level P4 to Intermediate Landing - Section/Elevation
Scale: 1/2" = 1'-0"

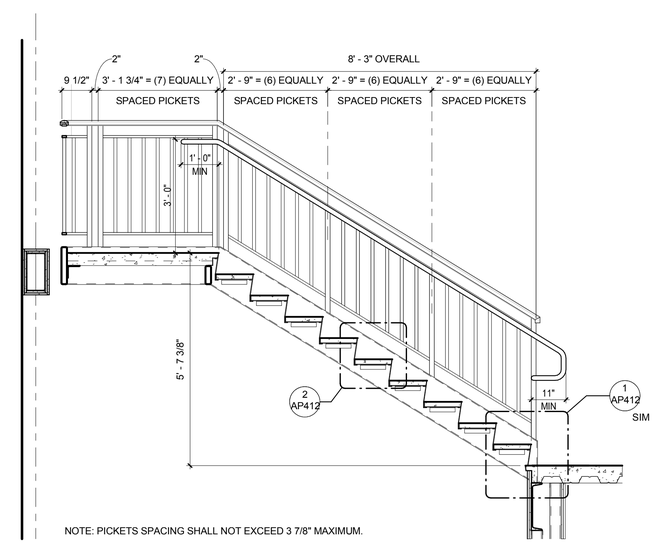

NOTE: PICKETS SPACING SHALL NOT EXCEED 3 7/8" MAXIMUM.

SIMILAR BETWEEN LEVELS P3-P4 AND P5-P7.

1 AP405 PG - Stair SP1 - Level P2 to Intermediate Landing - Section/Elevation
Scale: 1/2" = 1'-0"

RECORD DRAWINGS

AS BUILT DRAWING

THIS DRAWING HAS BEEN PREPARED FROM CONTRACTOR FURNISHED INFORMATION. KUMIN ASSOCIATES, INC. MAKES NO WARRANTY, EXPRESSED OR IMPLIED, WITH REGARD TO THE ACCURACY OR COMPLETENESS OF THE INFORMATION NOW RECORDED IN THIS DRAWING. KUMIN ASSOCIATES, INC. WILL NOT ASSUME ANY LIABILITY, PROFESSIONAL OBLIGATION OR RISK THAT MIGHT OCCUR DUE TO THE RE-USE OF THIS INFORMATION.

KUMIN
ARCHITECTURE INTERIORS PLANNING
1000 E. 76th AVENUE, SUITE B200
ANCHORAGE, AK 99518
907.272.5863 FAX 272.5301
CA LICENSE: AC-2521

NEESE CONSTRUCTION, INC.

Childrens Dental Clinic Building

4441 Diplomacy Drive, Anchorage AK 99508

Southcentral Foundation

No.	Description	Date

Drawn By: JL
Checked By: JS
Date: 24 DEC 2018
Phase: RECORD DRAWINGS
Job No: 21519.00
SHEET TITLE: Pkng - Stair SP1 - Enlarged Sections/Elevations

SHEET NO:

AP405

1/4/2019 2:10:57 AM

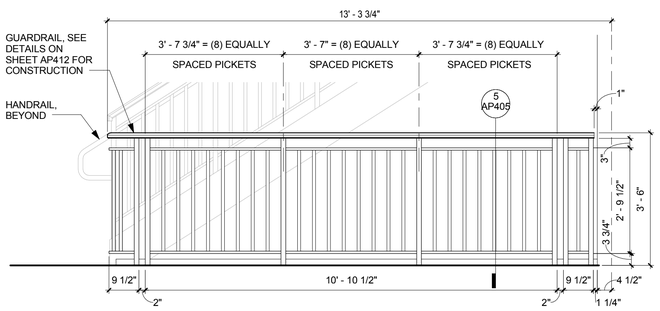

NOTE: REFER TO FINISH SCHEDULE FOR STAIR, GUARDRAIL AND HANDRAIL FINISHES.

7 AP406 PG - Stair SP1 - Guardrail @ Open Side of Stair - Level P1-P7 - Elevation
Scale: 1/2" = 1'-0"

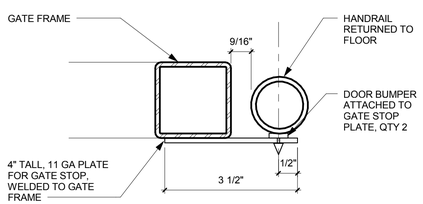

6 AP406 PG - Swing Gate Stop at Handrail - Stair - SP1
Scale: 6" = 1'-0"

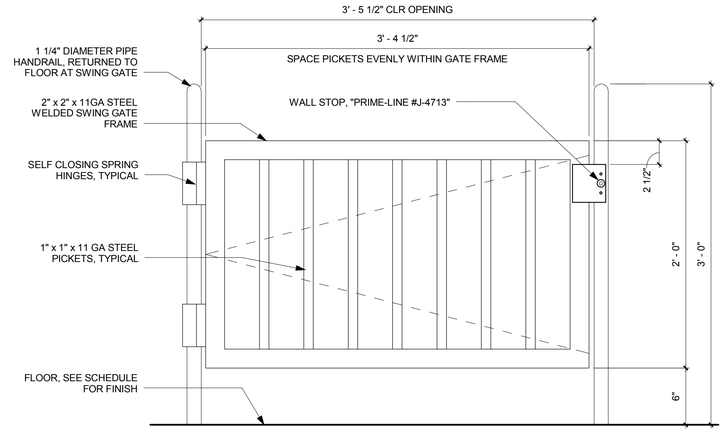

NOTE: GATE SHALL BE FINISHED TO MATCH ADJACENT GUARDRAILS.

5 AP406 PG - Swing Gate Elevation - Stair SP1
Scale: 1 1/2" = 1'-0"

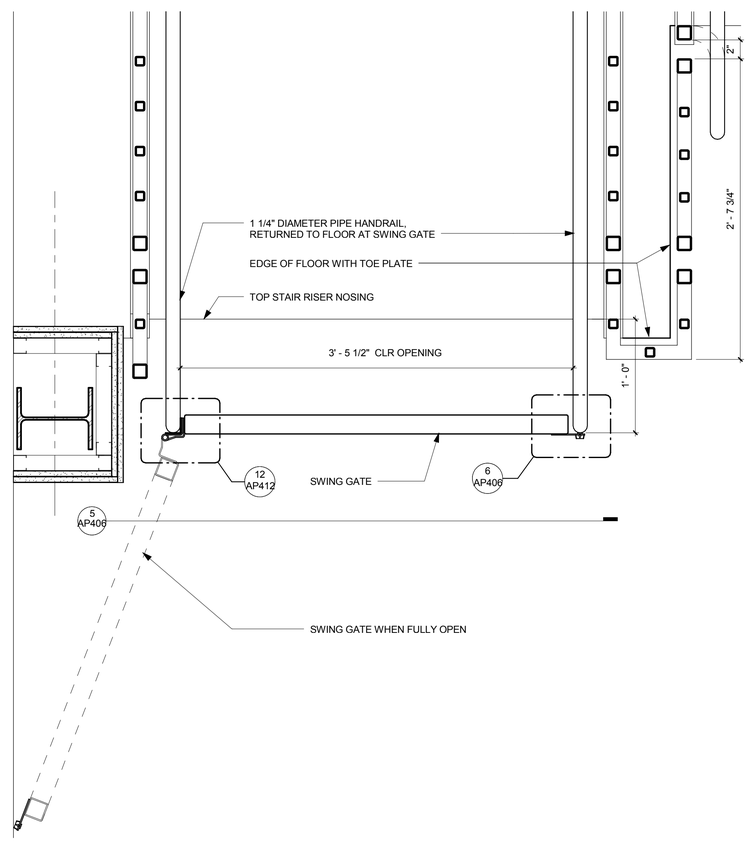

4 AP406 PG - Swing Gate Plan - Stair SP1
Scale: 1 1/2" = 1'-0"

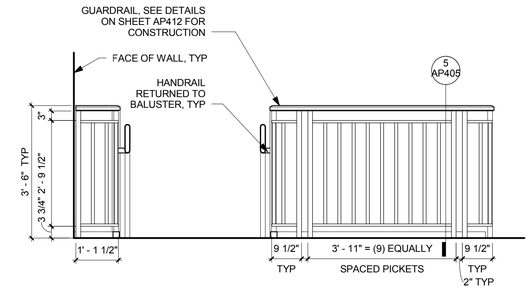

NOTE: REFER TO FINISH SCHEDULE FOR STAIR, GUARDRAIL AND HANDRAIL FINISHES. PICKET SPACING SHALL NOT EXCEED 3 7/8" MAXIMUM.

3 AP406 PG - Stair SP1 - Level P7 Landing - Elevation
Scale: 1/2" = 1'-0"

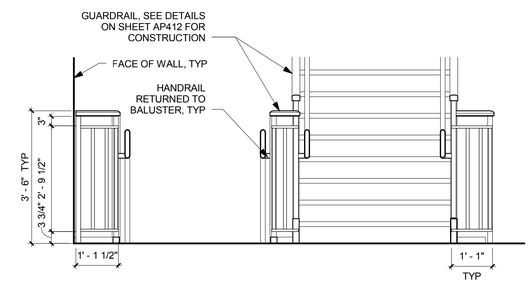

NOTE: REFER TO FINISH SCHEDULE FOR STAIR, GUARDRAIL AND HANDRAIL FINISHES.

2 AP406 PG - Stair SP1 - Level P2-P6 Landing - Elevation
Scale: 1/2" = 1'-0"

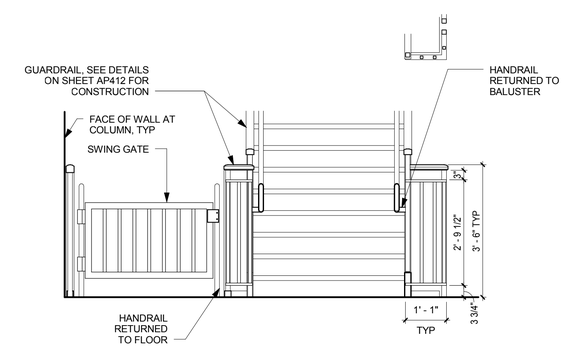

NOTE: REFER TO FINISH SCHEDULE FOR STAIR, GUARDRAIL AND HANDRAIL FINISHES.

1 AP406 PG - Stair SP1 - Level P1 Landing - Elevation
Scale: 1/2" = 1'-0"

RECORD DRAWINGS

AS BUILT DRAWING

THIS DRAWING HAS BEEN PREPARED FROM CONTRACTOR FURNISHED INFORMATION. KUMIN ASSOCIATES, INC. MAKES NO WARRANTY, EXPRESSED OR IMPLIED, WITH REGARD TO THE ACCURACY OR COMPLETENESS OF THE INFORMATION NOW RECORDED IN THIS DRAWING. KUMIN ASSOCIATES, INC. WILL NOT ASSUME ANY LIABILITY, PROFESSIONAL OBLIGATION OR RISK THAT MIGHT OCCUR DUE TO THE RE-USE OF THIS INFORMATION.

KUMIN
ARCHITECTURE INTERIORS PLANNING
1049 W 5th AVENUE, SUITE 200
ANCHORAGE, AK 99501
907-272-5863 FAX 272-5893
CA LICENSE: AC-25231

NEESE CONSTRUCTION, INC.

Childrens Dental Clinic Building

4441 Diplomacy Drive, Anchorage AK 99508

Southcentral Foundation

No.	Description	Date

Drawn By: JL
Checked By: JS
Date: 24 DEC 2018
Phase: RECORD DRAWINGS
Job No: 21519.00
SHEET TITLE: Pkng - Stair SP1 Details

SHEET NO:

AP406

1/4/2019 2:16:09 AM

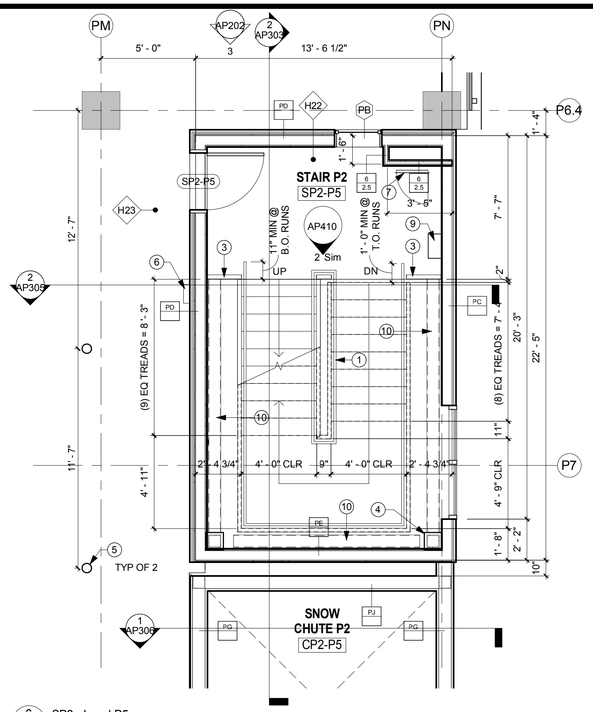

6 AP407 SP2 - Level P5
Scale: 1/4" = 1'-0"

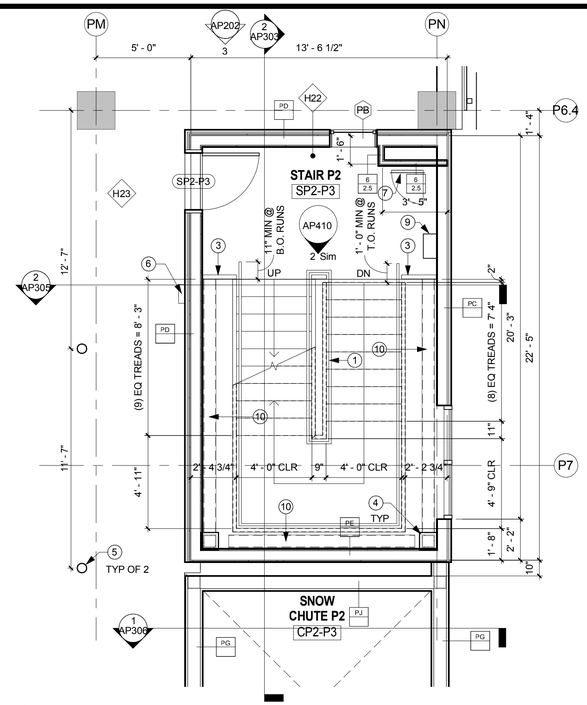

4 AP407 SP2 - Level P3
Scale: 1/4" = 1'-0"

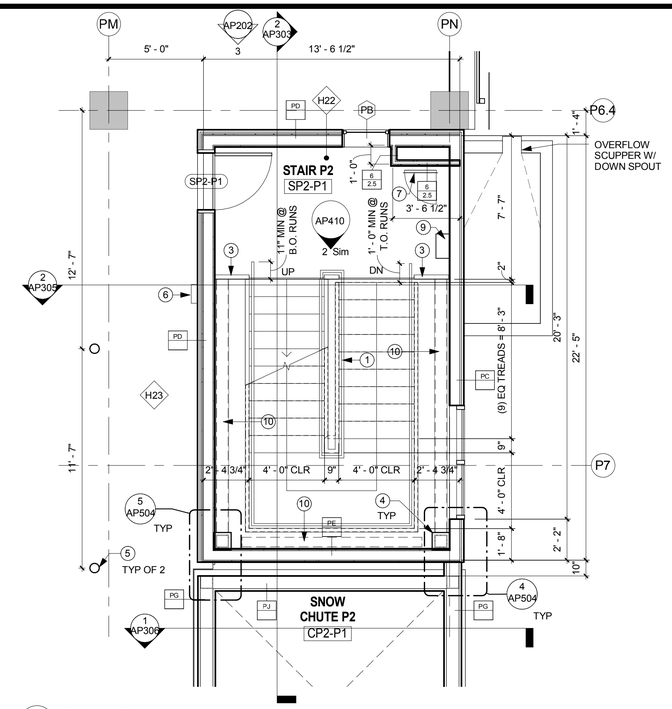

2 AP407 SP2 - Level P1
Scale: 1/4" = 1'-0"

GENERAL STAIR NOTES

1. SEE SHEET AP401 FOR GENERAL STAIR NOTES

SHEET NOTES

1 INTERIOR HANDRAIL
2 NON-LATCHING SELF-CLOSING SWING GATE
3 GUARDRAIL
4 STRUCTURE, SEE FIRE RATING DETAILS & STRUC
5 BOLLARD, SEE CIVIL & STRUC
6 BLUE PHONE
7 90-MINUTE RATED UNINSULATED ACCESS DOOR, 20" x 30", SILL 10" AFF TYP
8 90-MINUTE RATED UNINSULATED ACCESS DOOR, 24" x 30", SILL 60" AFF
9 FEC, SURFACE MOUNT
10 2-HR GWB WRAPPED BEAM
11 HEAD HEIGHT BARRIER RAIL

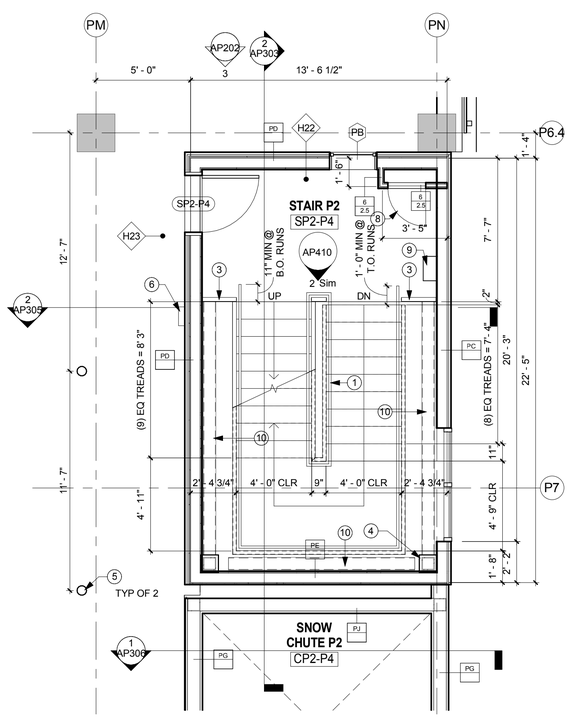

5 AP407 SP2 - Level P4
Scale: 1/4" = 1'-0"

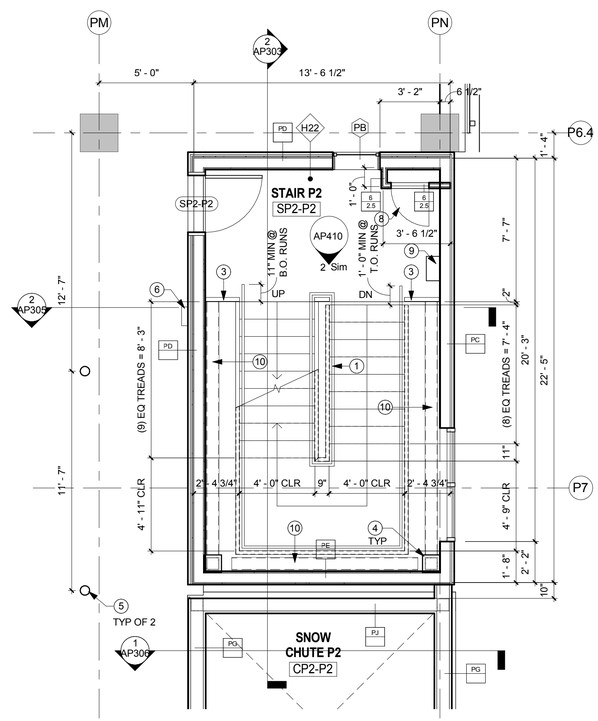

3 AP407 SP2 - Level P2
Scale: 1/4" = 1'-0"

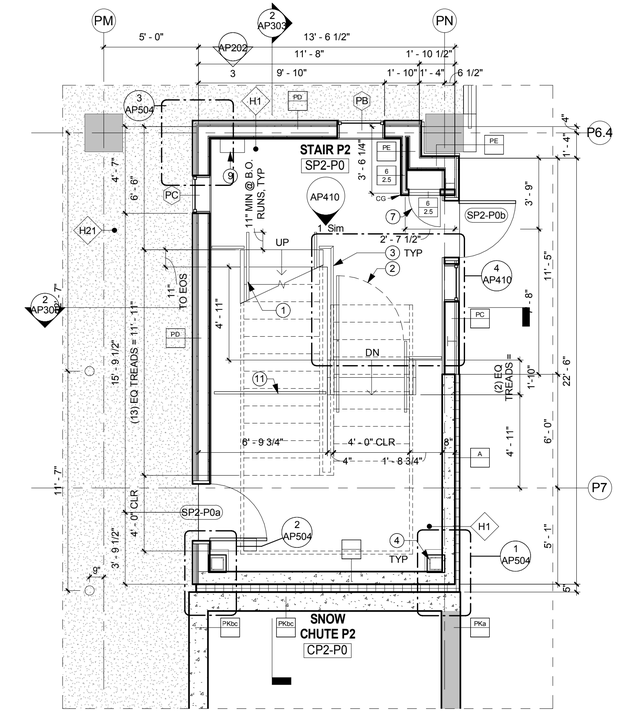

1 AP407 SP2 - Level P0
Scale: 1/4" = 1'-0"

SCALE: 1/4" = 1' - 0"
0' 2' 4' 8' 16'

RECORD DRAWINGS

AS BUILT DRAWING
THIS DRAWING HAS BEEN PREPARED FROM CONTRACTOR FURNISHED INFORMATION. KUMIN ASSOCIATES, INC. MAKES NO WARRANTY, EXPRESSED OR IMPLIED, WITH REGARD TO THE ACCURACY OR COMPLETENESS OF THE INFORMATION NOW RECORDED IN THIS DRAWING. KUMIN ASSOCIATES, INC. WILL NOT ASSUME ANY LIABILITY, PROFESSIONAL OBLIGATION OR RISK THAT MIGHT OCCUR DUE TO THE RE-USE OF THIS INFORMATION.

KUMIN
ARCHITECTURE INTERIORS PLANNING
1000 SOUTH BAILEY STREET
ANCHORAGE, AK 99501
907.272.5915 FEDEX
CHATHAM, NJ 07928
NEESE CONSTRUCTION, INC.

Childrens Dental Clinic Building

4441 Diplomacy Drive, Anchorage AK 99508
Southcentral Foundation

No.	Description	Date

Drawn By: SS, JL
Checked By: JS
Date: 24 DEC 2018
Phase: RECORD DRAWINGS
Job No: 21519.00
SHEET TITLE: Pkng - Stair SP2 - Enlarged Plans
SHEET NO: AP407

14/2019 2:11:04 AM

GENERAL STAIR NOTES

1. SEE SHEET AP401 FOR GENERAL STAIR NOTES

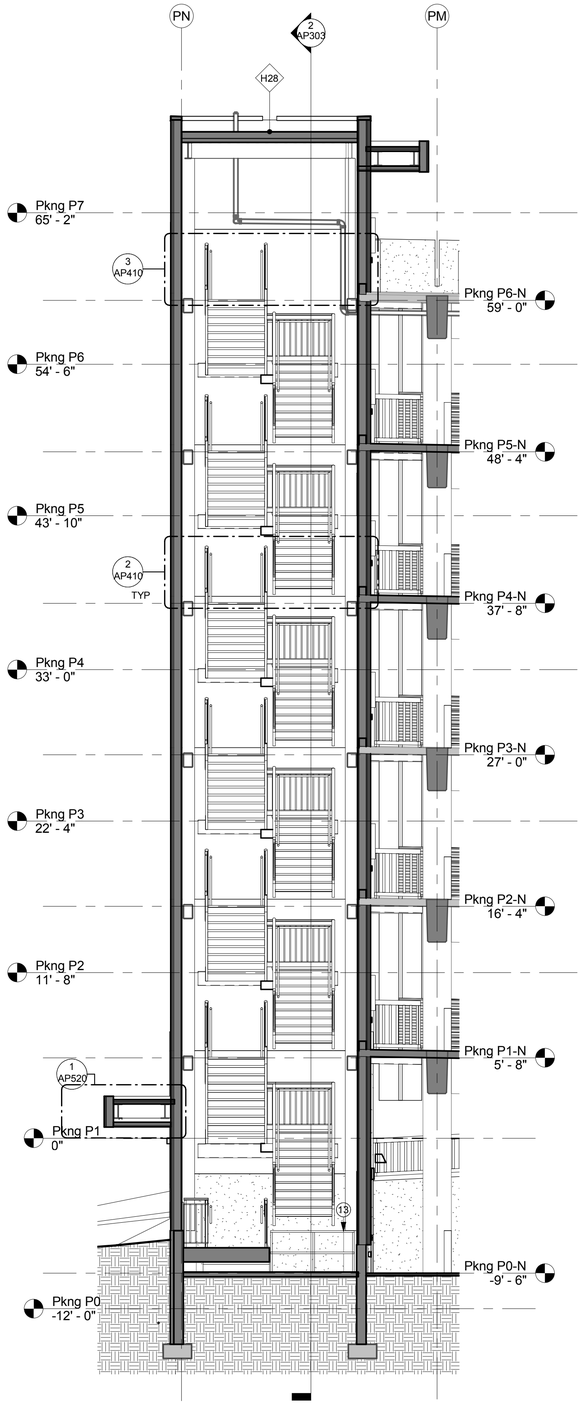

3 AP408 PG Stair 2 - East
Scale: 3/16" = 1'-0"

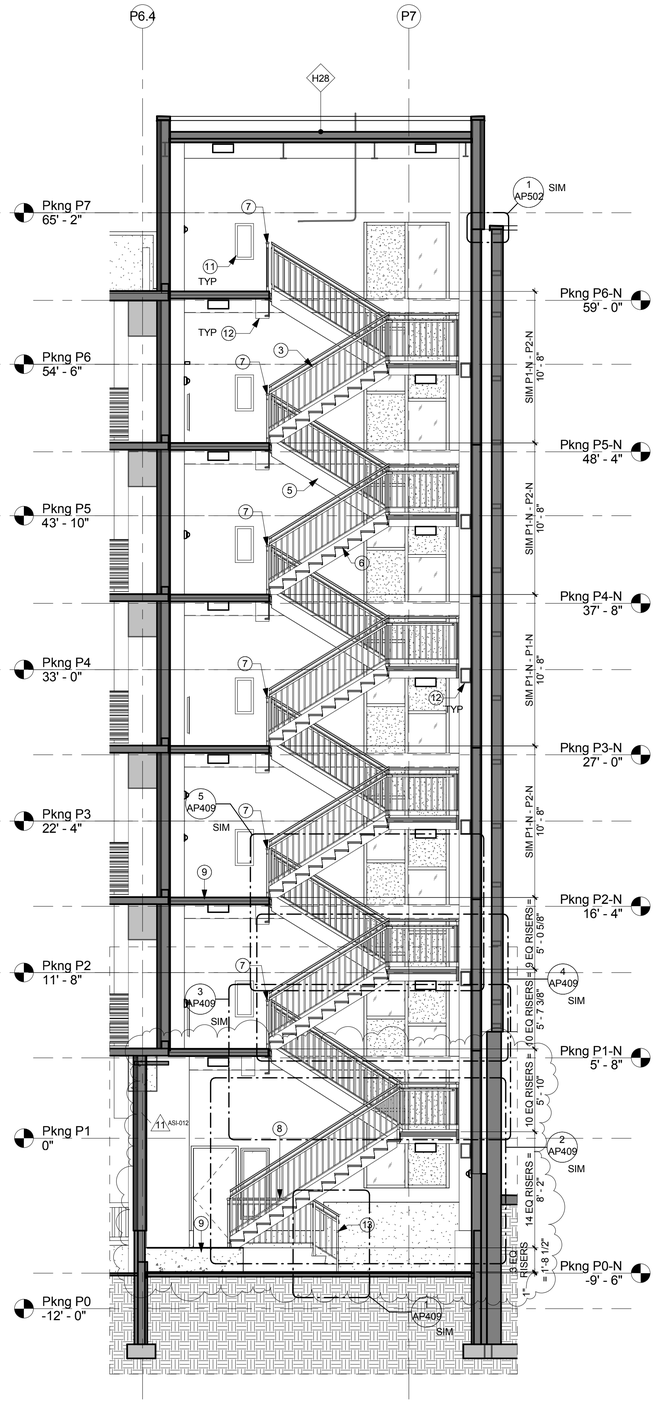

2 AP408 PG Stair 2 - North
Scale: 3/16" = 1'-0"

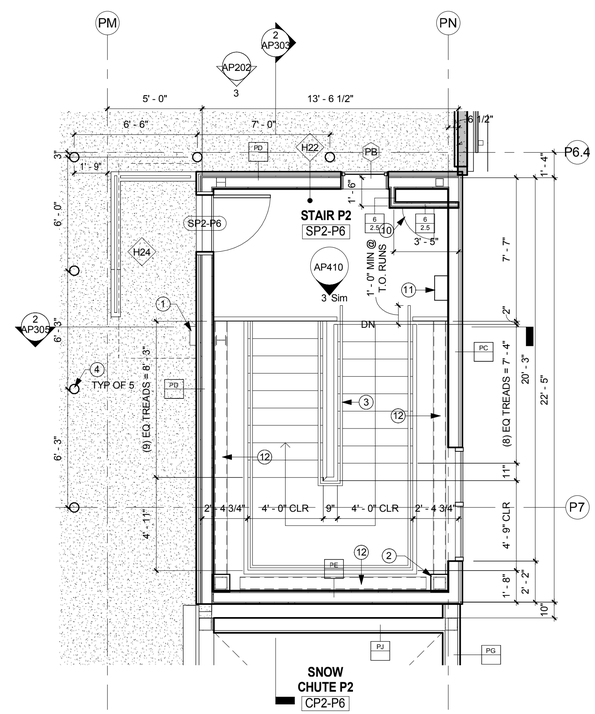

1 AP408 SP2 - Level P6
Scale: 1/4" = 1'-0"

SCALE: 1/4" = 1' - 0"
0' 2' 4' 8' 16'

RECORD DRAWINGS

SHEET NOTES

1. BLUE PHONE
2. STRUCTURE, SEE FIRE RATING DETAILS & STRUC
3. INTERIOR HANDRAIL
4. BOLLARD, SEE CIVIL & STRUC
5. STL STAIR STRINGER, SEE STRUC. FINISH AS SCHEDULED
6. FABRICATED METAL STAIRS W/ CONCRETE TREADS
7. GUARDRAIL
8. GUARDRAIL, TYP ALONG OPEN FLOOR EDGE
9. FLOOR ASSEMBLY, SEE STRUC
10. 90-MINUTE RATED UNINSULATED ACCESS DOOR, 20" x 30", SILL 10" AFF TYP
11. FEC, SURFACE MOUNT
12. 2-HR GWB WRAPPED BEAM
13. HEAD HEIGHT BARRIER RAIL

AS BUILT DRAWING
THIS DRAWING HAS BEEN PREPARED FROM CONTRACTOR FURNISHED INFORMATION. KUMIN ASSOCIATES, INC. MAKES NO WARRANTY, EXPRESSED OR IMPLIED, WITH REGARD TO THE ACCURACY OR COMPLETENESS OF THE INFORMATION NOW RECORDED IN THIS DRAWING. KUMIN ASSOCIATES, INC. WILL NOT ASSUME ANY LIABILITY, PROFESSIONAL OBLIGATION OR RISK THAT MIGHT OCCUR DUE TO THE RE-USE OF THIS INFORMATION.

KUMIN
ARCHITECTURE INTERIORS PLANNING
1049 W 5th AVENUE, SUITE 200
ANCHORAGE, AK 99501
907.272.5863 FAX 272.5511
CA LICENSE: AC-22231

NEESE CONSTRUCTION, INC.

Childrens Dental Clinic Building

4441 Diplomacy Drive, Anchorage AK 99508
Southcentral Foundation

No.	Description	Date

Drawn By: SS, JL
Checked By: JS
Date: 24 DEC 2018
Phase: RECORD DRAWINGS
Job No: 21519.00
SHEET TITLE: Pkng - Stair SP2 - Enlarged Plan & Sections

SHEET NO:
AP408

1/4/2019 2:11:09 AM

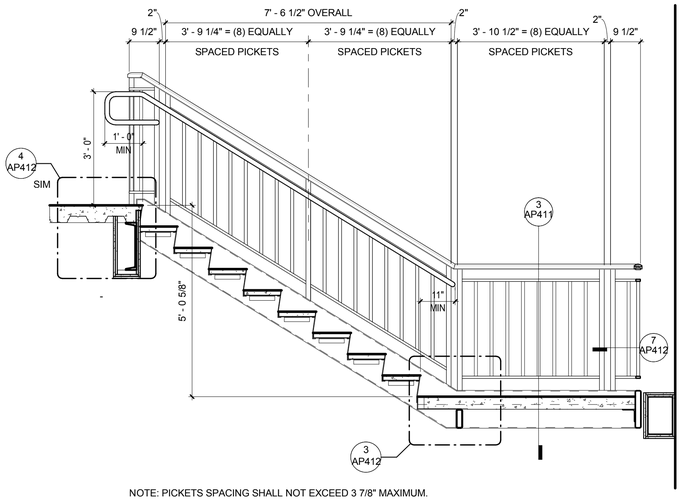

NOTE: PICKETS SPACING SHALL NOT EXCEED 3 7/8" MAXIMUM.

SIMILAR BETWEEN LEVELS P1-N - PN-2.

5 AP409 PG - Stair SP2 - Intermediate Landing to Level P2-N - Section/Elevation
Scale: 1/2" = 1'-0"

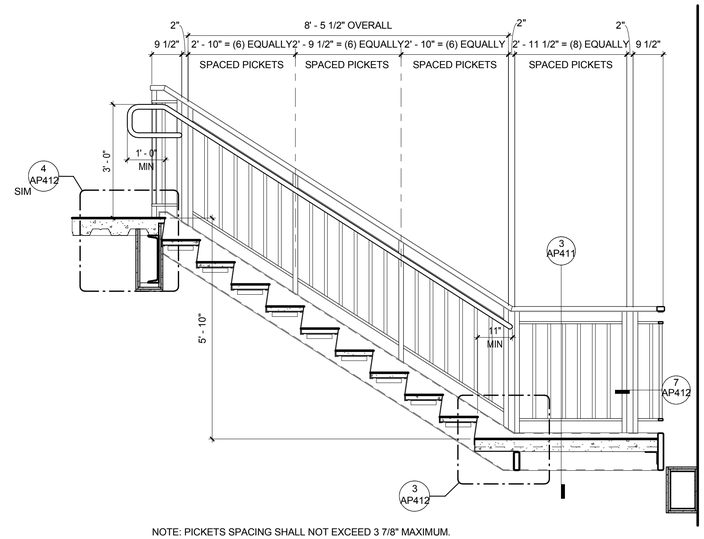

NOTE: PICKETS SPACING SHALL NOT EXCEED 3 7/8" MAXIMUM.

3 AP409 PG - Stair SP2 - Intermediate Landing to Level P1-N - Section/Elevation
Scale: 1/2" = 1'-0"

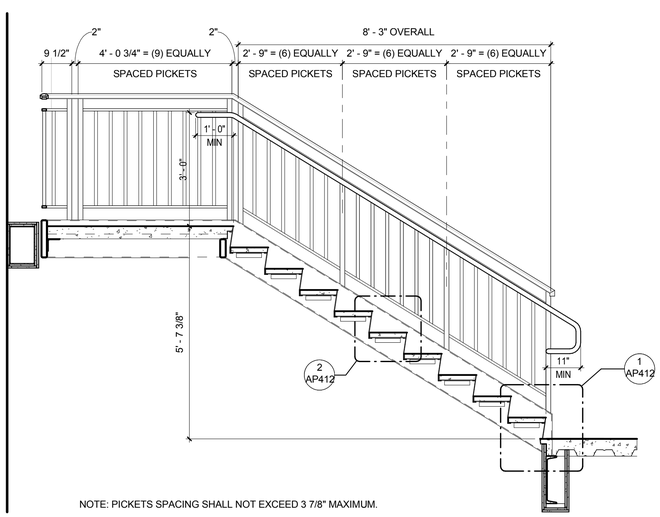

NOTE: PICKETS SPACING SHALL NOT EXCEED 3 7/8" MAXIMUM.

SIMILAR BETWEEN LEVELS P2-N - P6-N.

4 AP409 PG - Stair SP2 - Level P1-N to Intermediate Landing - Section/Elevation
Scale: 1/2" = 1'-0"

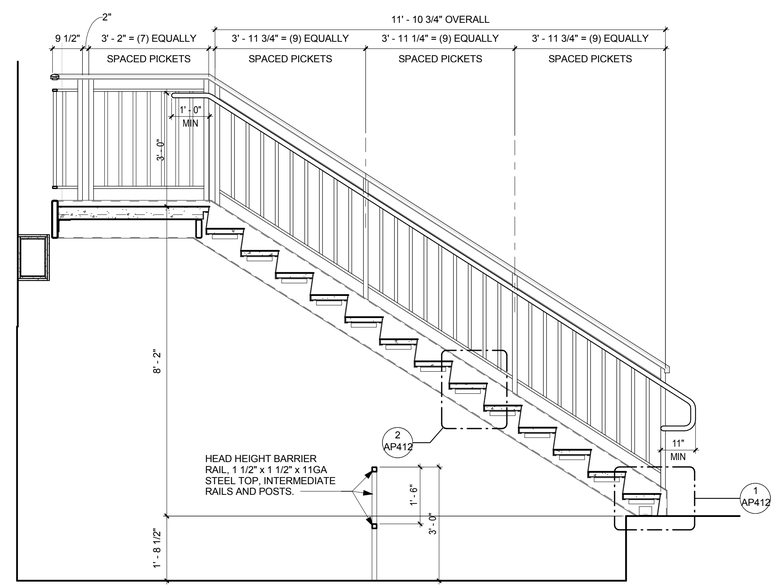

NOTE: PICKETS SPACING SHALL NOT EXCEED 3 7/8" MAXIMUM.

2 AP409 PG - Stair SP2 - Egress Landing to Intermediate Landing - Section/Elevation
Scale: 1/2" = 1'-0"

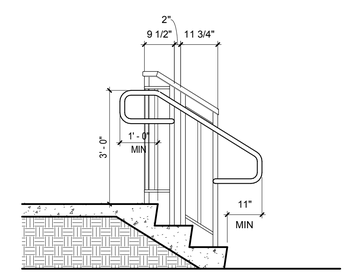

NOTE: PICKETS SPACING SHALL NOT EXCEED 3 7/8" MAXIMUM.

1 AP409 PG - Stair SP2 - Level PN0 to Egress Landing - Section/Elevation
Scale: 1/2" = 1'-0"

RECORD DRAWINGS

AS BUILT DRAWING

THIS DRAWING HAS BEEN PREPARED FROM CONTRACTOR FURNISHED INFORMATION. KUMIN ASSOCIATES, INC. MAKES NO WARRANTY, EXPRESSED OR IMPLIED, WITH REGARD TO THE ACCURACY OR COMPLETENESS OF THE INFORMATION NOW RECORDED IN THIS DRAWING. KUMIN ASSOCIATES, INC. WILL NOT ASSUME ANY LIABILITY, PROFESSIONAL OBLIGATION OR RISK THAT MIGHT OCCUR DUE TO THE RE-USE OF THIS INFORMATION.

KUMIN
ARCHITECTURE INTERIORS PLANNING
9101 JEWEL LAKE ROAD, STE.200
ANCHORAGE, AK 99502
907.272.5863 CA LICENSE: AC-25231

NEESE CONSTRUCTION, INC.

Childrens Dental Clinic Building

4441 Diplomacy Drive, Anchorage AK 99508

Southcentral Foundation

No.	Description	Date

Drawn By: JL
Checked By: JS
Date: 24 DEC 2018
Phase: RECORD DRAWINGS
Job No: 21519.00
SHEET TITLE: Pkng - Stair SP2 - Enlarged Sections/Elevations

SHEET NO:

AP409

14/2019 2:11:10 AM

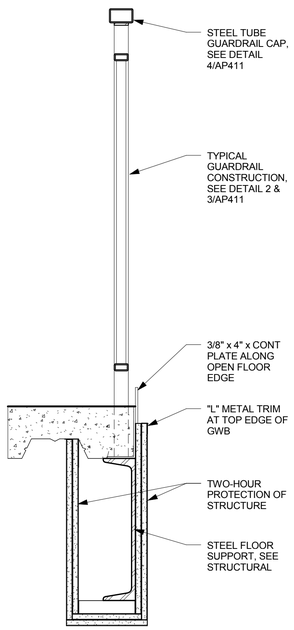

8 AP410 PG - Guardrail @ Landing Section - Stair SP2
Scale: 1 1/2" = 1'-0"

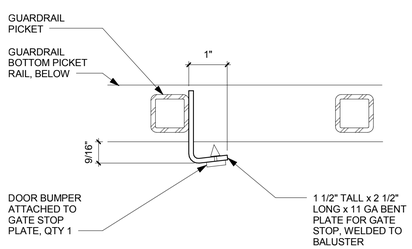

7 AP410 PG - Swing Gate Stop at Picket - Stair - SP2
Scale: 6" = 1'-0"

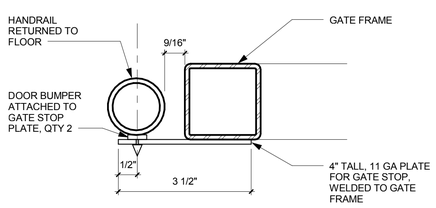

6 AP410 PG - Swing Gate Stop at Handrail - Stair - SP2
Scale: 6" = 1'-0"

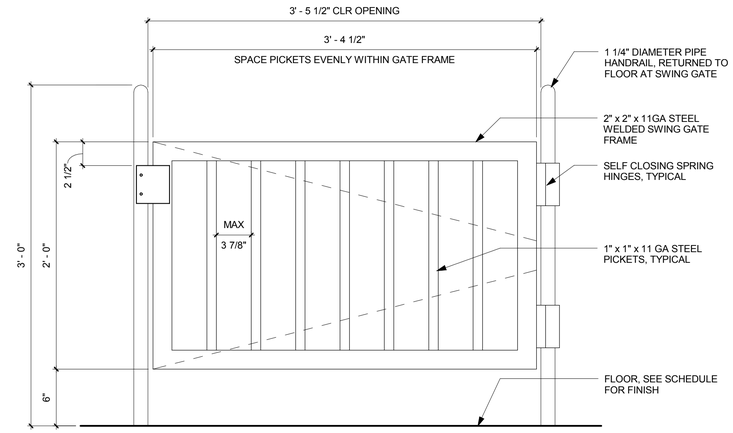

NOTE: GATE SHALL BE FINISHED TO MATCH ADJACENT GUARDRAILS.

5 AP410 PG - Swing Gate Elevation - Stair SP2
Scale: 1 1/2" = 1'-0"

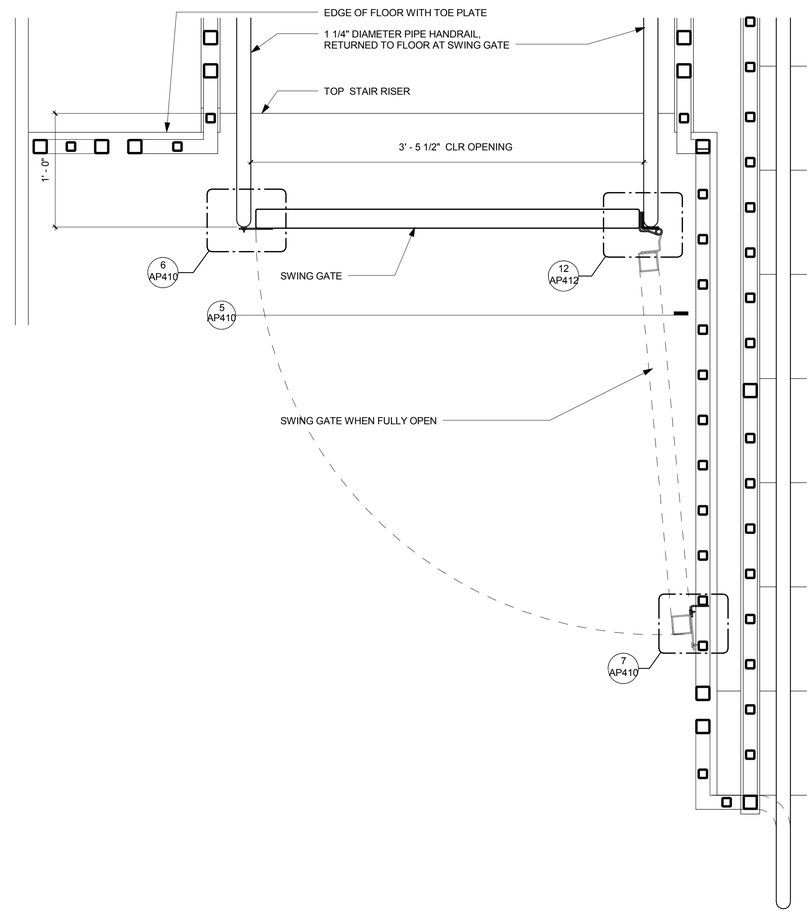

4 AP410 PG - Swing Gate Plan - Stair SP2
Scale: 1 1/2" = 1'-0"

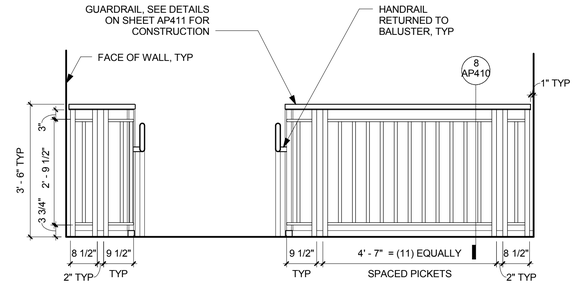

NOTE: REFER TO FINISH SCHEDULE FOR STAIR, GUARDRAIL AND HANDRAIL FINISHES.

3 AP410 PG - Stair SP2 - Level P6-N Landing - Elevation
Scale: 1/2" = 1'-0"

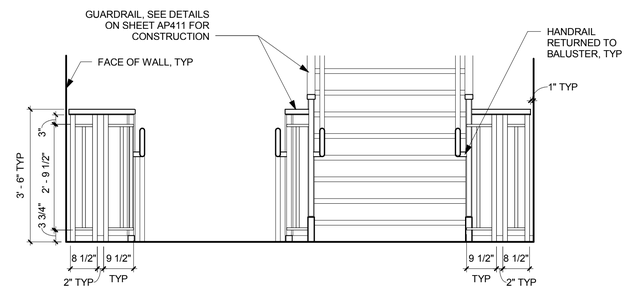

NOTE: REFER TO FINISH SCHEDULE FOR STAIR, GUARDRAIL AND HANDRAIL FINISHES.

2 AP410 PG - Stair SP2 - Level P1-N - P5-N Landing - Elevation
Scale: 1/2" = 1'-0"

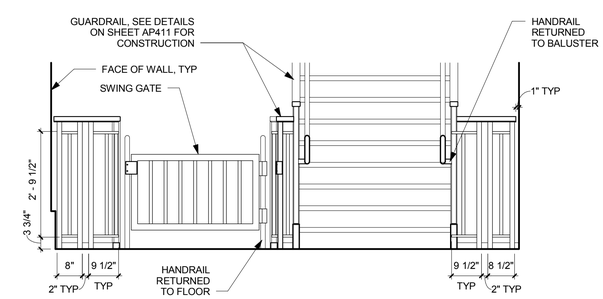

NOTE: REFER TO FINISH SCHEDULE FOR STAIR, GUARDRAIL AND HANDRAIL FINISHES.

1 AP410 PG - Stair SP2 - Level P0 -N Landing - Elevation
Scale: 1/2" = 1'-0"

RECORD DRAWINGS

AS BUILT DRAWING

THIS DRAWING HAS BEEN PREPARED FROM CONTRACTOR FURNISHED INFORMATION. KUMIN ASSOCIATES, INC. MAKES NO WARRANTY, EXPRESSED OR IMPLIED, WITH REGARD TO THE ACCURACY OR COMPLETENESS OF THE INFORMATION NOW RECORDED IN THIS DRAWING. KUMIN ASSOCIATES, INC. WILL NOT ASSUME ANY LIABILITY, PROFESSIONAL OBLIGATION OR RISK THAT MIGHT OCCUR DUE TO THE RE-USE OF THIS INFORMATION.

KUMIN
ARCHITECTURE INTERIORS PLANNING
1049 W 5th AVENUE, SUITE 200
ANCHORAGE, AK 99501
907-272-5863 CA LICENSE: AC-2501

NEESE CONSTRUCTION, INC.

Childrens Dental Clinic Building

4441 Diplomacy Drive, Anchorage AK 99508

Southcentral Foundation

No.	Description	Date

Drawn By: JL
Checked By: JS
Date: 24 DEC 2018
Phase: RECORD DRAWINGS
Job No: 21519.00
SHEET TITLE: Pkng - Stair SP2 Details

SHEET NO:

AP410

14/2019 2:11:12 AM

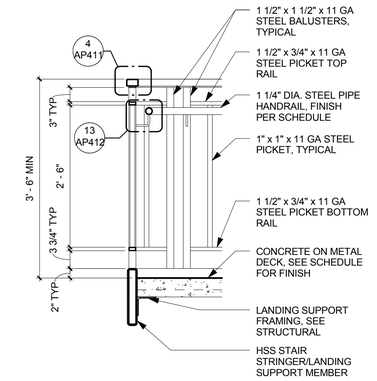

3 AP411 PG - Typ Railing Section at Intermediate Landing - Stair SP2
Scale: 3/4" = 1'-0"

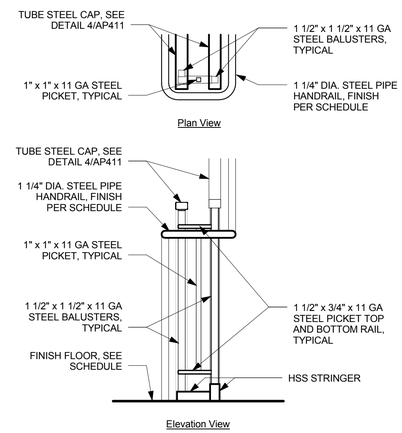

2 AP411 PG - Typ Guardrail/Handrail Transition at Intermediate Landing - Stair SP2
Scale: 3/4" = 1'-0"

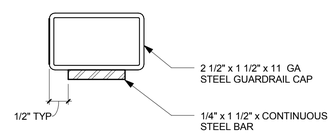

4 AP411 PG - Typ Guardrail Tube Steel Cap Detail - Stair SP2
Scale: 6" = 1'-0"

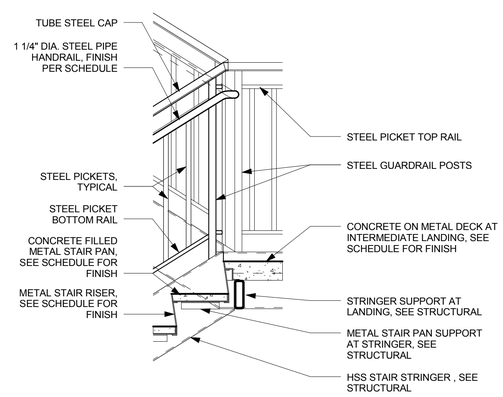

1 AP411 PG - Typ Railing Transition at Intermediate Landing Detail - Stair SP2
Scale: 3/4" = 1'-0"

RECORD DRAWINGS

AS BUILT DRAWING
THIS DRAWING HAS BEEN PREPARED FROM CONTRACTOR FURNISHED INFORMATION. KUMIN ASSOCIATES, INC. MAKES NO WARRANTY, EXPRESSED OR IMPLIED, WITH REGARD TO THE ACCURACY OR COMPLETENESS OF THE INFORMATION NOW RECORDED IN THIS DRAWING. KUMIN ASSOCIATES, INC. WILL NOT ASSUME ANY LIABILITY, PROFESSIONAL OBLIGATION OR RISK THAT MIGHT OCCUR DUE TO THE RE-USE OF THIS INFORMATION.

KUMIN
ARCHITECTURE INTERIORS PLANNING
9101 JEWEL LAKE ROAD, ANCHORAGE, AK 99502
907.272.5863 FAX 272.5301
CAA LICENSE: AC-C2201
NEESE BUILDING CONSTRUCTION, INC.

Childrens Dental Clinic Building

4441 Diplomacy Drive, Anchorage AK 99508
Southcentral Foundation

No.	Description	Date

Drawn By: JL
Checked By: JS
Date: 24 DEC 2018
Phase: RECORD DRAWINGS
Job No: 21519.00
SHEET TITLE: Pkng - Stair SP2 Details
SHEET NO: AP411

1/4/2019 2:11:13 AM

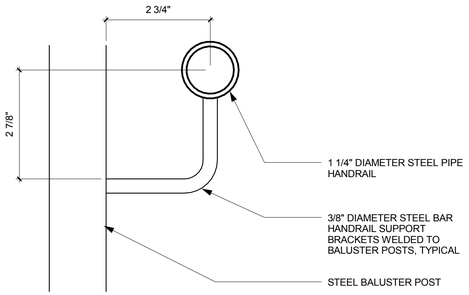

13 AP412 PG - Typ Handrail Support Detail - Stair SP1 &S P2
Scale: 6" = 1'-0"

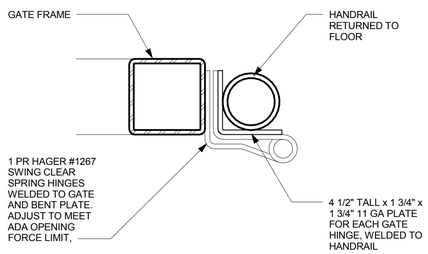

12 AP412 PG - Swing Gate Hinge at Handrail
Scale: 6" = 1'-0"

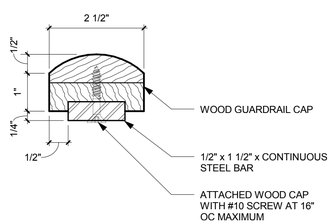

10 AP412 Skybridge - Typ Guardrail Wood Cap Detail - Stair/Ramp
Scale: 6" = 1'-0"

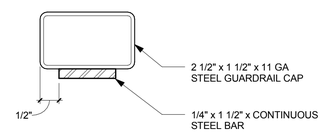

9 AP412 PG - Typ Guardrail Wood Cap Detail - Stair SP1
Scale: 6" = 1'-0"

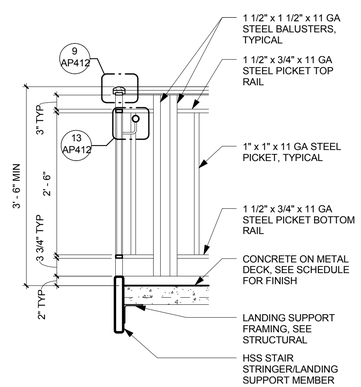

8 AP412 PG - Typ Railing Section at Intermediate Landing - Stair SP1
Scale: 3/4" = 1'-0"

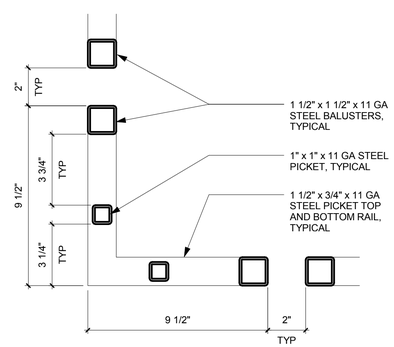

NOTE: TYPICAL CONFIGURATION AT INTERMEDIATE LANDINGS AND AT STAIR FLIGHT COMING UP TO A FLOOR LEVEL.

7 AP412 PG - Typ Guardrail Outside Corner Detail - Stair SP1 & SP2
Scale: 3" = 1'-0"

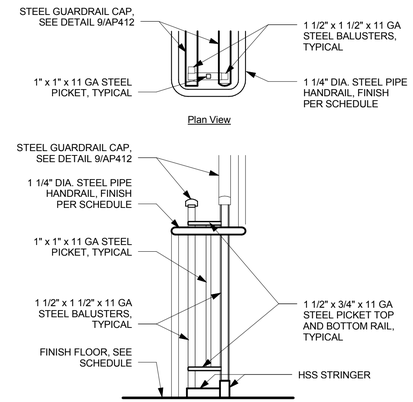

6 AP412 PG - Typ Guardrail/Handrail Transition at Intermediate Landing - Stair SP1
Scale: 3/4" = 1'-0"

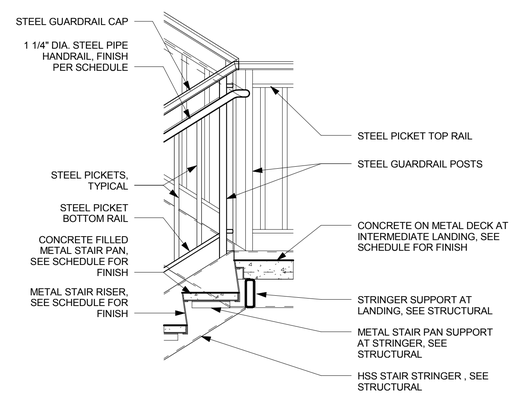

5 AP412 PG - Typ Railing Transition at Intermediate Landing Detail - Stair SP1
Scale: 3/4" = 1'-0"

4 AP412 PG - Typ Top Landing Detail - Stair SP1 & SP2
Scale: 1 1/2" = 1'-0"

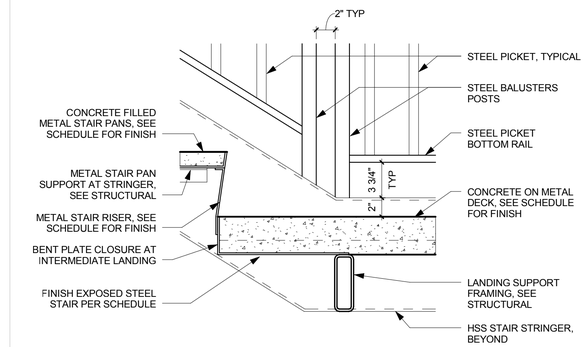

3 AP412 PG - Typ Intermediate Landing Detail - Stair SP1 & SP2
Scale: 1 1/2" = 1'-0"

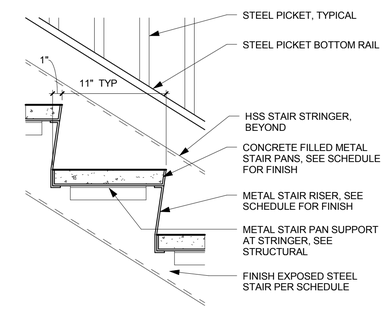

2 AP412 PG - Typ Stair Pan and Riser Detail - Stair SP1 & SP2
Scale: 1 1/2" = 1'-0"

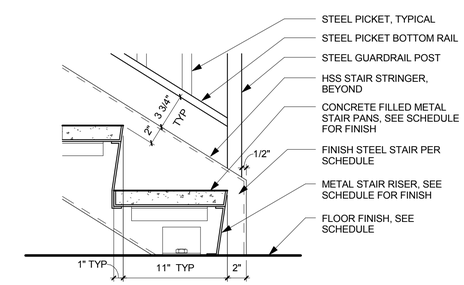

1 AP412 PG - Typ Bottom Detail - Stair SP1 & SP2
Scale: 1 1/2" = 1'-0"

RECORD DRAWINGS

AS BUILT DRAWING

THIS DRAWING HAS BEEN PREPARED FROM CONTRACTOR FURNISHED INFORMATION. KUMIN ASSOCIATES, INC. MAKES NO WARRANTY, EXPRESSED OR IMPLIED, WITH REGARD TO THE ACCURACY OR COMPLETENESS OF THE INFORMATION NOW RECORDED IN THIS DRAWING. KUMIN ASSOCIATES, INC. WILL NOT ASSUME ANY LIABILITY, PROFESSIONAL OBLIGATION OR RISK THAT MIGHT OCCUR DUE TO THE RE-USE OF THIS INFORMATION.

KUMIN
ARCHITECTURE INTERIORS PLANNING
1000 E. 76th AVENUE, SUITE B200
ANCHORAGE, ALASKA 99518-3330
907.272.5863 FAX 907.272.5873
CA LICENSE: AC-25231

NEESE CONSTRUCTION, INC.

Childrens Dental Clinic Building

4441 Diplomacy Drive, Anchorage AK 99508

Southcentral Foundation

No.	Description	Date

Drawn By: JL
Checked By: JS
Date: 24 DEC 2018
Phase: RECORD DRAWINGS
Job No: 21519.00
SHEET TITLE: Pkng - Typ Stair Details

SHEET NO:

AP412

04/2019 2:11:15 AM

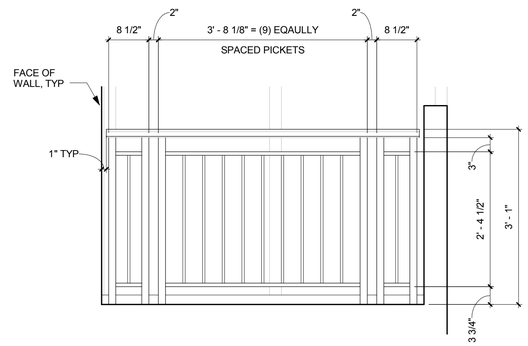

NOTE: REFER TO FINISH SCHEDULE FOR STAIR, GUARDRAIL AND HANDRAIL FINISHES. PICKETS SPACING SHALL NOT EXCEED 3 7/8" MAXIMUM.

9 AP413 Skybridge - Landing L3 - Elevation
Scale: 3/4" = 1'-0"

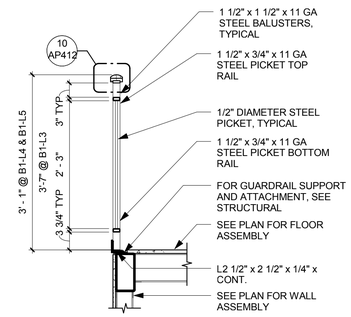

6 AP413 Skybridge - Hand/Guard Rail at Ramp/Landing
Scale: 3/4" = 1'-0"

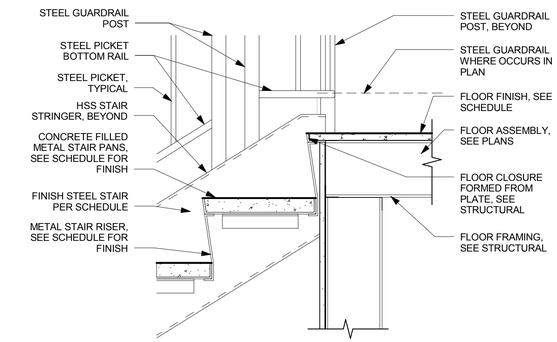

3 AP413 Skybridge - Typ Top Landing Detail - Stair L4 & L5
Scale: 1 1/2" = 1'-0"

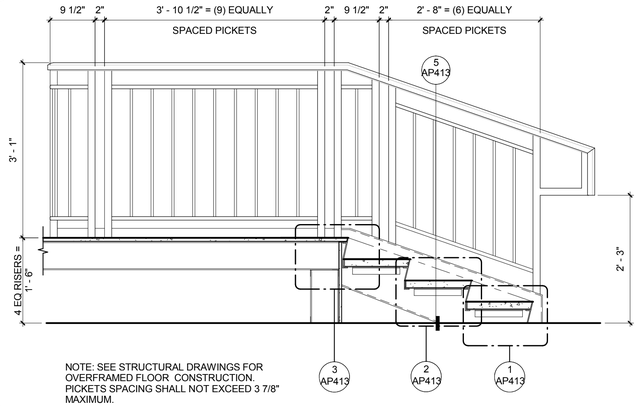

NOTE: SEE STRUCTURAL DRAWINGS FOR OVERFRAMED FLOOR CONSTRUCTION. PICKETS SPACING SHALL NOT EXCEED 3 7/8" MAXIMUM.

8 AP413 Skybridge - Stair L5 - Section/Elevation
Scale: 3/4" = 1'-0"

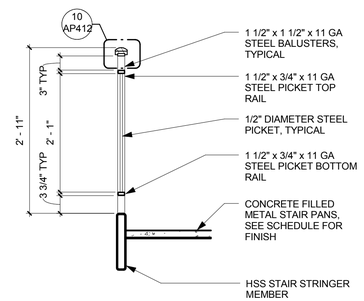

5 AP413 Skybridge - Typ Hand/Guard Rail Section at Stair Stringer - Stair L4 & L5
Scale: 3/4" = 1'-0"

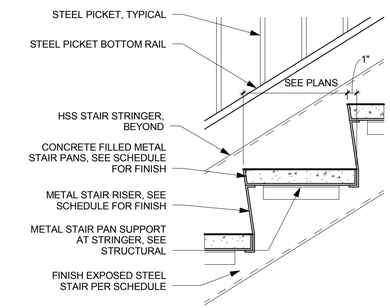

2 AP413 Skybridge - Typ Stair Pan and Riser Detail - Stair L4 & L5
Scale: 1 1/2" = 1'-0"

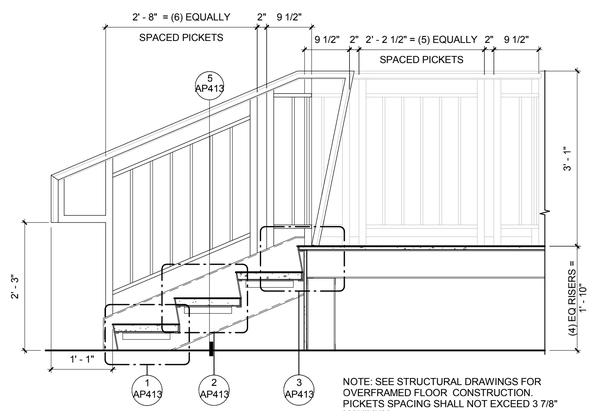

NOTE: SEE STRUCTURAL DRAWINGS FOR OVERFRAMED FLOOR CONSTRUCTION. PICKETS SPACING SHALL NOT EXCEED 3 7/8" MAXIMUM.

7 AP413 Skybridge - Stair L4 - Section/Elevation
Scale: 3/4" = 1'-0"

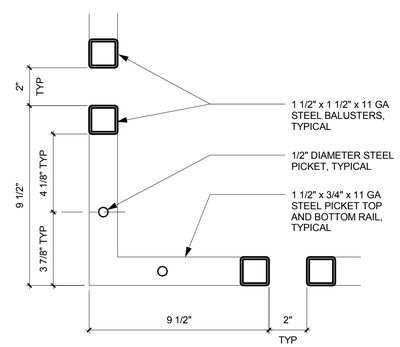

NOTE: TYPICAL CONFIGURATION AT INTERMEDIATE LANDINGS AND AT STAIR FLIGHT COMING UP TO A FLOOR LEVEL.

4 AP413 Skybridge - Typ Hand/Guard Rail Outside Corner Detail - Stair L4 & L5
Scale: 3" = 1'-0"

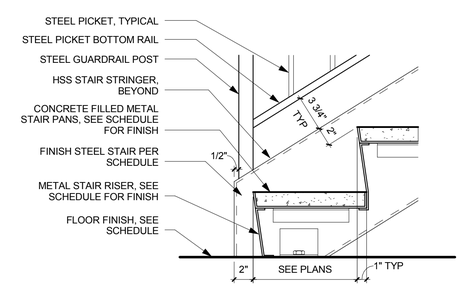

1 AP413 Skybridge - Typ Bottom of Detail - Stair L4 & L5
Scale: 1 1/2" = 1'-0"

AS BUILT DRAWING

THIS DRAWING HAS BEEN PREPARED FROM CONTRACTOR FURNISHED INFORMATION. KUMIN ASSOCIATES, INC. MAKES NO WARRANTY, EXPRESSED OR IMPLIED, WITH REGARD TO THE ACCURACY OR COMPLETENESS OF THE INFORMATION NOW RECORDED IN THIS DRAWING. KUMIN ASSOCIATES, INC. WILL NOT ASSUME ANY LIABILITY, PROFESSIONAL OBLIGATION OR RISK THAT MIGHT OCCUR DUE TO THE RE-USE OF THIS INFORMATION.

KUMIN
ARCHITECTURE INTERIORS PLANNING
1049 W 5th AVENUE, ANCHORAGE, AK 99501
907.272.5863 FAX 272.5830
CA LICENSE: AC-25231

NEESE CONSTRUCTION, INC.

Childrens Dental Clinic Building

4441 Diplomacy Drive, Anchorage AK 99508

Southcentral Foundation

No.	Description	Date

Drawn By: JL
Checked By: JS
Date: 24 DEC 2018
Phase: RECORD DRAWINGS
Job No: 21519.00
SHEET TITLE: Skybridge - Stair and Ramp Detail

SHEET NO:

AP413

04/2019 2:11:17 AM

RECORD DRAWINGS

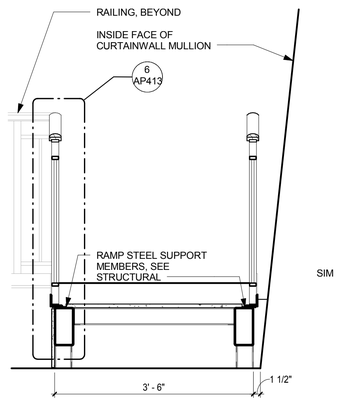

4 AP414 Skybridge - Ramp L5 - Section
Scale: 3/4" = 1'-0"

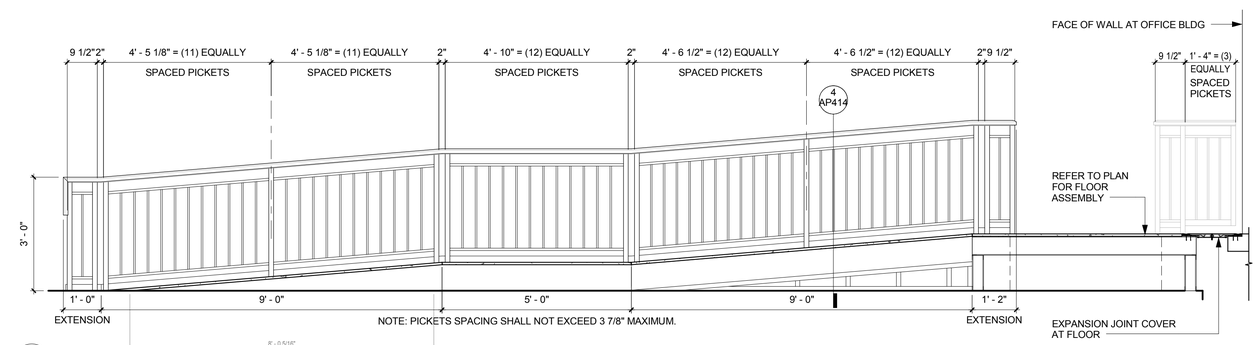

2 AP414 Skybridge - Ramp L5 - Section/Elevation
Scale: 1/2" = 1'-0"

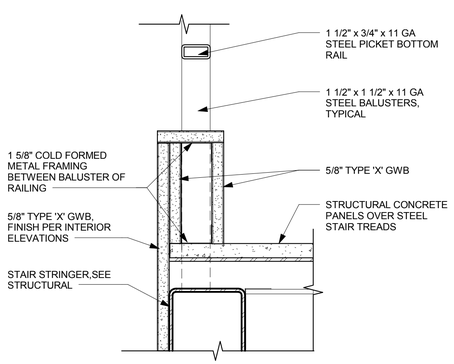

5 AP414 Skybridge - Stair L3 - Guardrail Base/Trim Detail
Scale: 3" = 1'-0"

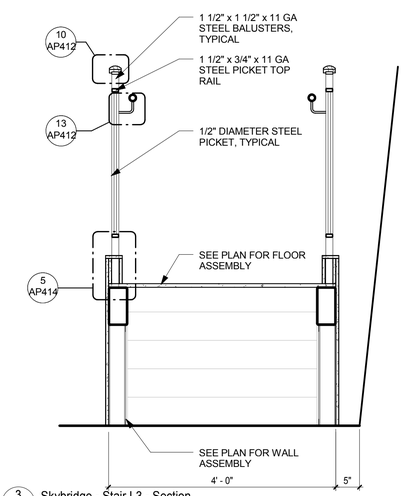

3 AP414 Skybridge - Stair L3 - Section
Scale: 3/4" = 1'-0"

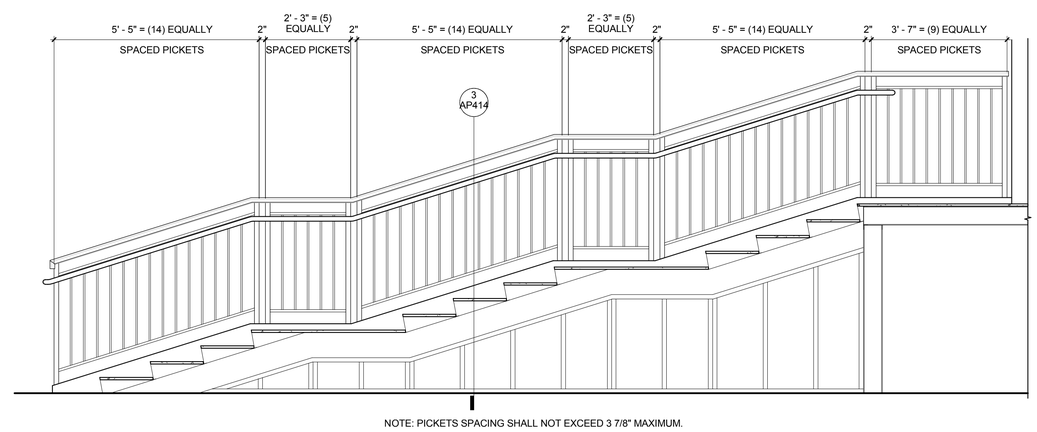

1 AP414 Skybridge - Stair L3 - Section/Elevation
Scale: 1/2" = 1'-0"

RECORD DRAWINGS

AS BUILT DRAWING

THIS DRAWING HAS BEEN PREPARED FROM CONTRACTOR FURNISHED INFORMATION. KUMIN ASSOCIATES, INC. MAKES NO WARRANTY, EXPRESSED OR IMPLIED, WITH REGARD TO THE ACCURACY OR COMPLETENESS OF THE INFORMATION NOW RECORDED IN THIS DRAWING. KUMIN ASSOCIATES, INC. WILL NOT ASSUME ANY LIABILITY, PROFESSIONAL OBLIGATION OR RISK THAT MIGHT OCCUR DUE TO THE RE-USE OF THIS INFORMATION.

KUMIN
ARCHITECTURE INTERIORS PLANNING
9101 E. DIMOND BLVD. ANCHORAGE, AK 99507
907.272.5863 FAX 272.5301
CA LICENSE: AC-2501

NEESE CONSTRUCTION, INC.

Childrens Dental Clinic Building

4441 Diplomacy Drive, Anchorage AK 99508
Southcentral Foundation

No.	Description	Date

Drawn By: JL
Checked By: JS
Date: 24 DEC 2018
Phase: RECORD DRAWINGS
Job No: 21519.00
SHEET TITLE: Skybridge - Stair and Ramp Detail

SHEET NO:

AP414

14/2019 2:11:19 AM

GENERAL FLOOR PLAN NOTES - PKNG

1. SEE SHEET AP110 FOR GENERAL FLOOR PLAN NOTES

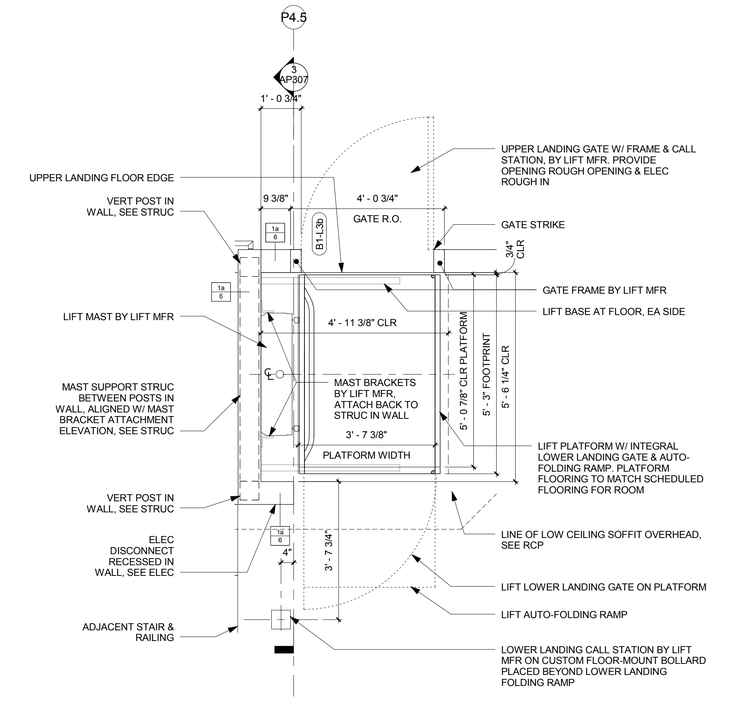

2 AP415 Skybridge Vertical Lift
Scale: 1/2" = 1'-0"

N

SCALE: 1/2" = 1' - 0"
0' 1' 2' 4' 8'

SHEET NOTES

1. STEEL CABLE VEHICLE BARRIER, SEE STRUC
2. MIN 3'-6" HIGH CONC WALL, SEE STRUC
3. BOLLARD, SEE CIVIL & STRUC

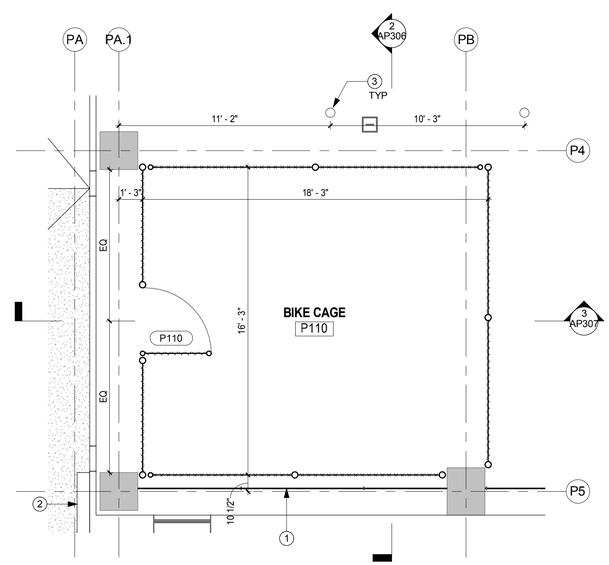

NOTES:
1. ALL FENCE DIMENSIONS ARE TO CENTERLINE OF POSTS, UNO
2. SECURE POSTS TO CONC DECK PER STRUC, TYP
3. BRACE T.O. FENCE POSTS TO UNDERSIDE OF DECK ABOVE, COORD W/ STRUC, TYP
4. FENCE FABRIC SHALL EXTEND MIN 8'-0" ABOVE PAVEMENT SURFACE, AND BE LEVEL ACROSS THE TOP
5. SEE SEPARATE FFE PACKAGE, VOLUME 1c FOR BIKE RACK EQUIPMENT, TYP

1 AP415 P1 - Bike Cage
Scale: 1/4" = 1'-0"

N

SCALE: 1/4" = 1' - 0"
0' 2' 4' 8' 16'

RECORD DRAWINGS

AS BUILT DRAWING
THIS DRAWING HAS BEEN PREPARED FROM CONTRACTOR FURNISHED INFORMATION. KUMIN ASSOCIATES, INC. MAKES NO WARRANTY, EXPRESSED OR IMPLIED, WITH REGARD TO THE ACCURACY OR COMPLETENESS OF THE INFORMATION NOW RECORDED IN THIS DRAWING. KUMIN ASSOCIATES, INC. WILL NOT ASSUME ANY LIABILITY, PROFESSIONAL OBLIGATION OR RISK THAT MIGHT OCCUR DUE TO THE RE-USE OF THIS INFORMATION.

KUMIN
ARCHITECTURE INTERIORS PLANNING
9101 JEWEL LAKE ROAD, SUITE 300
ANCHORAGE, AK 99502
907.272.5863 FAX 272.5915

NEESE CONSTRUCTION, INC.

Childrens Dental Clinic Building

4441 Diplomacy Drive, Anchorage AK 99508
Southcentral Foundation

No.	Description	Date

Drawn By: SS
Checked By: JS
Date: 24 DEC 2018
Phase: RECORD DRAWINGS
Job No: 21519.00
SHEET TITLE: Enlarged Plans - Bike Cage, Skybridge Lift
SHEET NO: AP415

04/2019 2:11:22 AM

GENERAL INTERIOR ELEVATION NOTES - PARKING GARAGE

- SEE AP601 FOR FINISH SCHEDULE
- SEE A600 FOR INTERIOR FINISH LEGEND

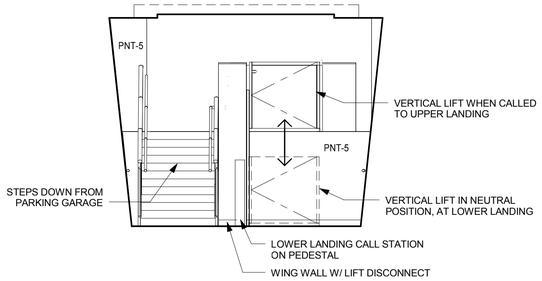

1 AP450 SB - L3 North
Scale: 1/4" = 1'-0"

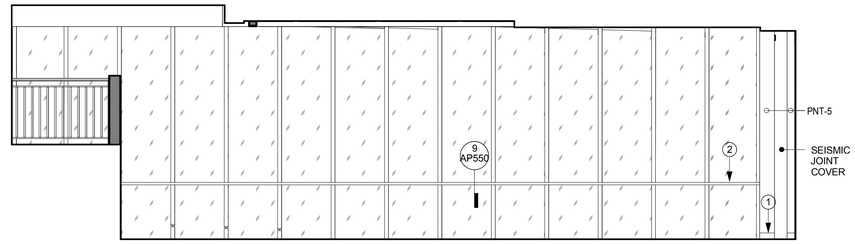

3 AP450 SB - L3 East
Scale: 1/4" = 1'-0"

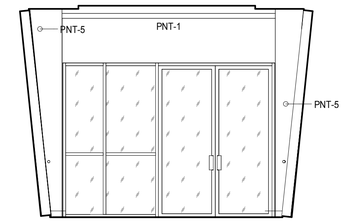

4 AP450 SB - L3 South
Scale: 1/4" = 1'-0"

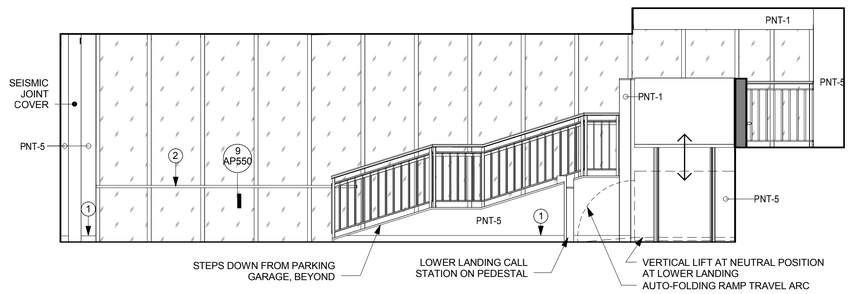

2 AP450 SB - L3 West
Scale: 1/4" = 1'-0"

SHEET NOTES

1 SCHEDULED BASE
2 CONT SSTL HANDRAIL ALONG CURTAINWALL EXCEPT AT STAIRS, STEPS AND RAMPS

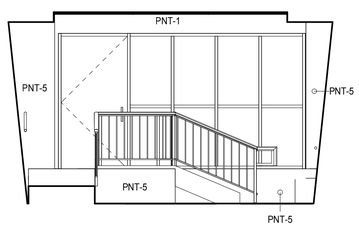

5 AP450 SB - L4 North
Scale: 1/4" = 1'-0"

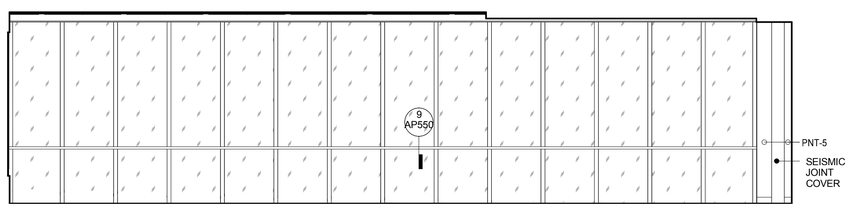

6 AP450 SB - L4 East
Scale: 1/4" = 1'-0"

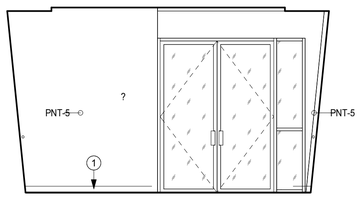

7 AP450 SB - L4 South
Scale: 1/4" = 1'-0"

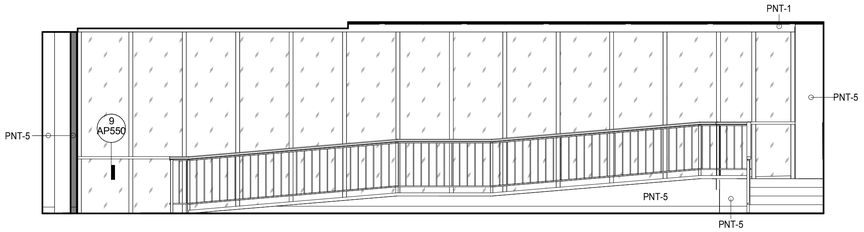

8 AP450 SB - L4 West
Scale: 1/4" = 1'-0"

SCALE: 1/4" = 1' - 0"
0' 2' 4' 8' 16'

RECORD DRAWINGS

AS BUILT DRAWING
THIS DRAWING HAS BEEN PREPARED FROM CONTRACTOR FURNISHED INFORMATION. KUMIN ASSOCIATES, INC. MAKES NO WARRANTY, EXPRESSED OR IMPLIED, WITH REGARD TO THE ACCURACY OR COMPLETENESS OF THE INFORMATION NOW RECORDED IN THIS DRAWING. KUMIN ASSOCIATES, INC. WILL NOT ASSUME ANY LIABILITY, PROFESSIONAL OBLIGATION OR RISK THAT MIGHT OCCUR DUE TO THE RE-USE OF THIS INFORMATION.

KUMIN
ARCHITECTURE INTERIORS PLANNING
9101 JEWEL LAKE ROAD, SUITE 300
ANCHORAGE, AK 99502
907.272.5863 FAX 272.5301
CA LICENSE: AC-22231

NEESE CONSTRUCTION, INC.

Childrens Dental Clinic Building

4441 Diplomacy Drive, Anchorage AK 99508
Southcentral Foundation

No.	Description	Date

Drawn By: SS
Checked By: JS
Date: 24 DEC 2018
Phase: RECORD DRAWINGS
Job No: 21519.00
SHEET TITLE: Interior Elevations

SHEET NO:
AP450

1/4/2019 2:11:23 AM

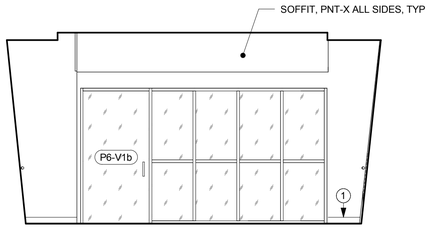

1 AP451 SB - L5 North
Scale: 1/4" = 1'-0"

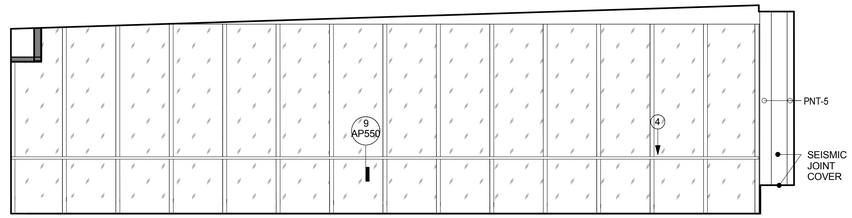

2 AP451 SB - L5 East
Scale: 1/4" = 1'-0"

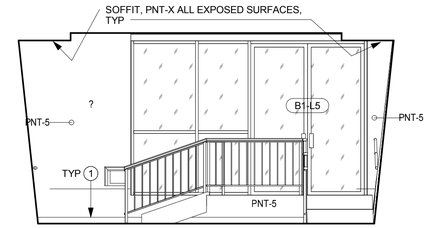

3 AP451 SB - L5 South
Scale: 1/4" = 1'-0"

4 AP451 SB - L5 West
Scale: 1/4" = 1'-0"

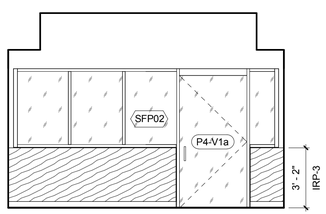

5 AP451 Vest. P4-V1 - North
Scale: 1/4" = 1'-0"

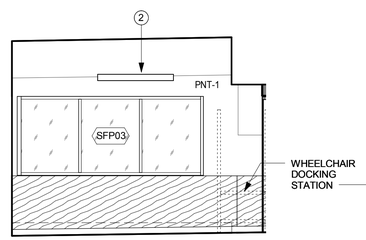

6 AP451 Vest. P4-V1 - East
Scale: 1/4" = 1'-0"

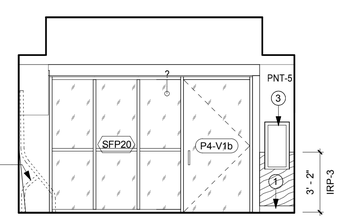

7 AP451 Vest. P4-V1 - South
Scale: 1/4" = 1'-0"

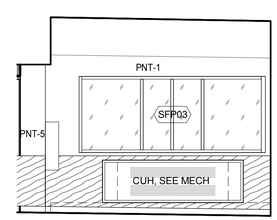

8 AP451 Vest. P4-V1 - West
Scale: 1/4" = 1'-0"

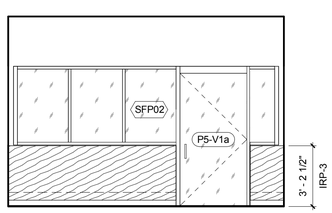

12 AP451 Vest. P5-V1 - North
Scale: 1/4" = 1'-0"

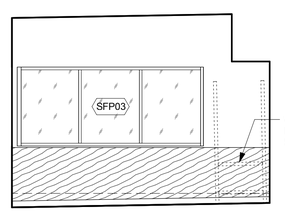

9 AP451 Vest. P5-V1 - East
Scale: 1/4" = 1'-0"

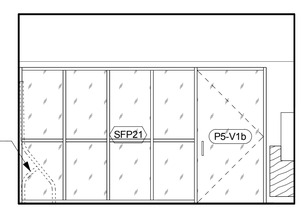

10 AP451 Vest. P5-V1 - South
Scale: 1/4" = 1'-0"

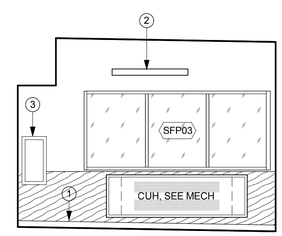

11 AP451 Vest. P5-V1 - West
Scale: 1/4" = 1'-0"

GENERAL INTERIOR ELEVATION NOTES - PARKING GARAGE

1. SEE SHEET AP450 FOR GENERAL INTERIOR ELEVATION NOTES, TYP

SHEET NOTES

1 SCHEDULED BASE
2 LIGHT FIXTURE, REFERENCE RCP AND ELECTRICAL DRAWINGS
3 FEC, SURFACE MOUNT
4 CONT SSTL HANDRAIL ALONG CURTAINWALL EXCEPT AT STAIRS, STEPS AND RAMPS

AS BUILT DRAWING
THIS DRAWING HAS BEEN PREPARED FROM CONTRACTOR FURNISHED INFORMATION. KUMIN ASSOCIATES, INC. MAKES NO WARRANTY, EXPRESSED OR IMPLIED, WITH REGARD TO THE ACCURACY OR COMPLETENESS OF THE INFORMATION NOW RECORDED IN THIS DRAWING. KUMIN ASSOCIATES, INC. WILL NOT ASSUME ANY LIABILITY, PROFESSIONAL OBLIGATION OR RISK THAT MIGHT OCCUR DUE TO THE RE-USE OF THIS INFORMATION.

KUMIN
ARCHITECTURE INTERIORS PLANNING
9101 JEWEL LAKE ROAD, SUITE 200
ANCHORAGE, AK 99502
(907) 272-5863 FAX (907) 272-5863
CA LICENSE: AC-25231

NEESE CONSTRUCTION, INC.

Childrens Dental Clinic Building

4441 Diplomacy Drive, Anchorage AK 99508
Southcentral Foundation

No.	Description	Date

Drawn By: SS
Checked By: JS
Date: 24 DEC 2018
Phase: RECORD DRAWINGS
Job No: 21519.00
SHEET TITLE: Interior Elevations
SHEET NO: AP451

04/20/19 2:11:59 AM

RECORD DRAWINGS

GENERAL INTERIOR ELEVATION NOTES - PARKING GARAGE

1. SEE SHEET AP450 FOR GENERAL INTERIOR ELEVATION NOTES, TYP

1 AP452 Stair SP1-P1 - North
Scale: 1/4" = 1'-0"

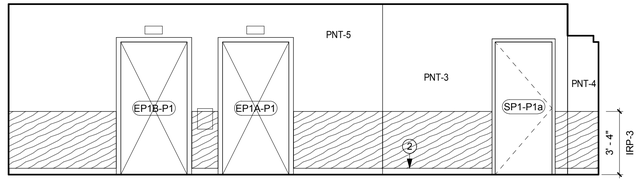

2 AP452 Stair SP1-P1 - East
Scale: 1/4" = 1'-0"

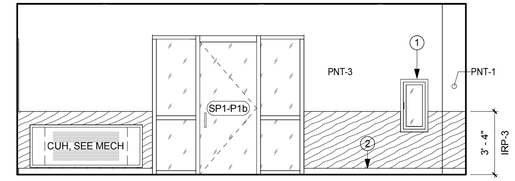

3 AP452 Stair SP1-P1 - South
Scale: 1/4" = 1'-0"

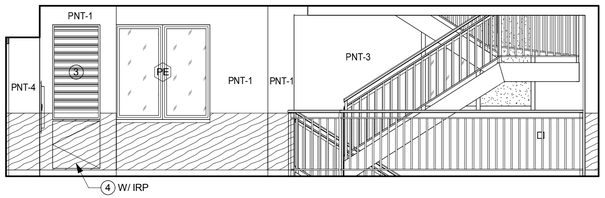

4 AP452 Stair SP1-P1 - West
Scale: 1/4" = 1'-0"

5 AP452 Stair SP1-P2 - North (-P3 to -P7 Sim)
Scale: 1/4" = 1'-0"

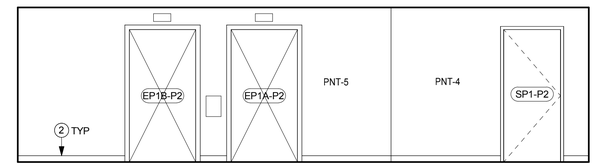

6 AP452 Stair SP1-P2 - East (-P3 to -P7 Sim)
Scale: 1/4" = 1'-0"

SHEET NOTES

1. FEC, FULLY RECESSED
2. SCHEDULED BASE
3. LOUVER, SEE MECH
4. ACCESS PANEL

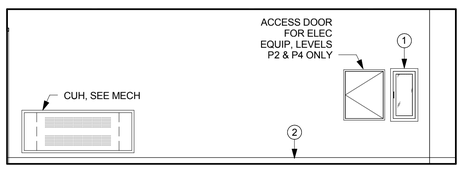

7 AP452 Stair SP1-P2 - South (-P3 to -P7 Sim)
Scale: 1/4" = 1'-0"

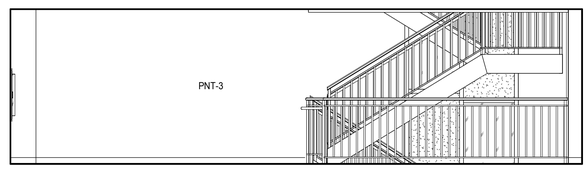

8 AP452 Stair SP1-P2 - West (-P3 to -P7 Sim)
Scale: 1/4" = 1'-0"

RECORD DRAWINGS

AS BUILT DRAWING

THIS DRAWING HAS BEEN PREPARED FROM CONTRACTOR FURNISHED INFORMATION. KUMIN ASSOCIATES, INC. MAKES NO WARRANTY, EXPRESSED OR IMPLIED, WITH REGARD TO THE ACCURACY OR COMPLETENESS OF THE INFORMATION NOW RECORDED IN THIS DRAWING. KUMIN ASSOCIATES, INC. WILL NOT ASSUME ANY LIABILITY, PROFESSIONAL OBLIGATION OR RISK THAT MIGHT OCCUR DUE TO THE RE-USE OF THIS INFORMATION.

KUMIN
ARCHITECTURE INTERIORS PLANNING
1049 E. 75TH AVENUE, SUITE 200
ANCHORAGE, AK 99507
907-272-5863
CA LICENSE: AC-22201

NEESE CONSTRUCTION, INC.

Childrens Dental Clinic Building

4441 Diplomacy Drive, Anchorage AK 99508

Southcentral Foundation

No.	Description	Date

Drawn By: SS
Checked By: JS
Date: 24 DEC 2018
Phase: RECORD DRAWINGS
Job No: 21519.00
SHEET TITLE: Interior Elevations
SHEET NO: AP452

04/2019 2:11:42 AM

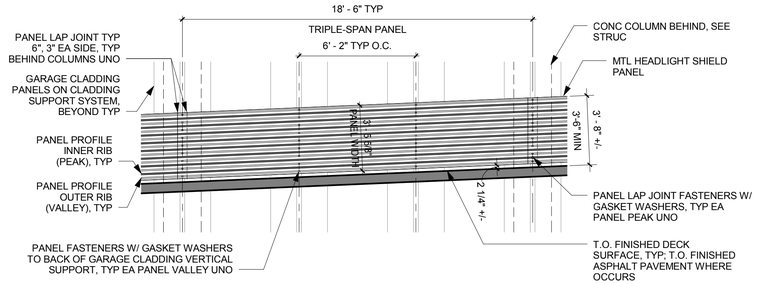

NOTES:
1. ALIGN PANEL UPPERMOST PROFILE OUTER RIB W/ TOP STRAND OF CABLE VEHICLE BARRIER RAIL, BEHIND, TYP
2. NOT USED
3. PANELS FOLLOW SLOPE OF DECK BELOW, TYP

7 / AP501 PG Headlight Shield Panel - Typ Column Bay
Scale: 1/4" = 1'-0"

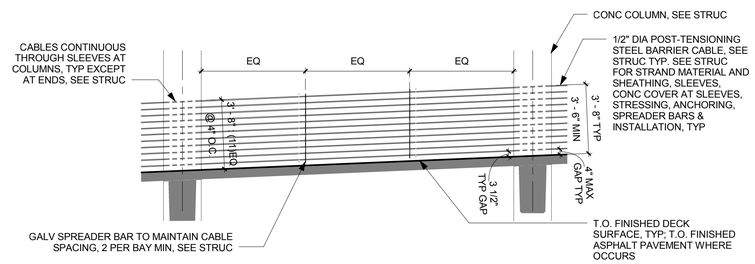

NOTES:
1. CENTER CABLE RAIL ON NORTH/SOUTH GRIDLINE, TYP
2. STRANDS AND SLEEVES SHALL FOLLOW SLOPE OF FINISHED DECK/PAVEMENT BELOW, TYP
3. WHERE DECK SLOPE CHANGES ALONG CABLE RUN, PROVIDE SLEEVES WITHIN COLUMN THAT EASE SLOPE ANGLE TRANSITION APPROXIMATELY AT CENTER OF COLUMN, SEE STRUC FOR ADDITIONAL INFORMATION

6 / AP501 PG Cable Vehicle Barrier Railing - Typ Column Bay
Scale: 1/4" = 1'-0"

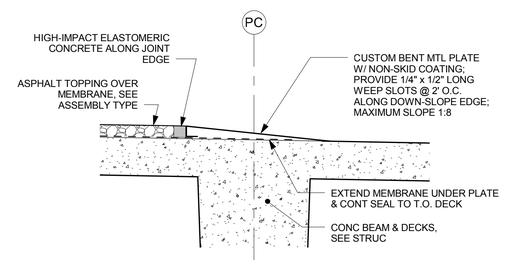

5 / AP501 Future - PG Deck Transition - Level P6 at PC
Scale: 1" = 1'-0"

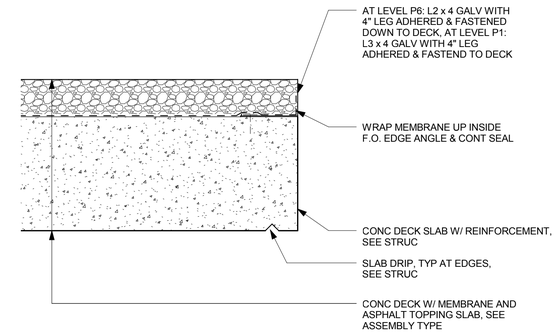

3 / AP501 Future - PG Deck Edge - Angle Asphalt Stop
Scale: 3" = 1'-0"

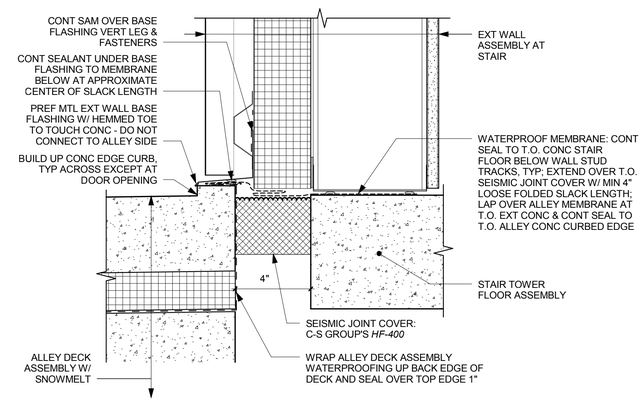

2 / AP501 PG Base Flashing at P1 Seismic Joint
Scale: 3" = 1'-0"

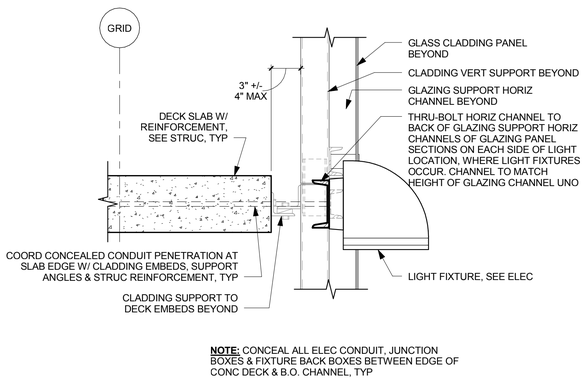

NOTE: CONCEAL ALL ELEC CONDUIT, JUNCTION BOXES & FIXTURE BACK BOXES BETWEEN EDGE OF CONC DECK & B.O. CHANNEL, TYP

9 / AP501 PG - Ext Deck-Mount Light Fixtures
Scale: 1 1/2" = 1'-0"

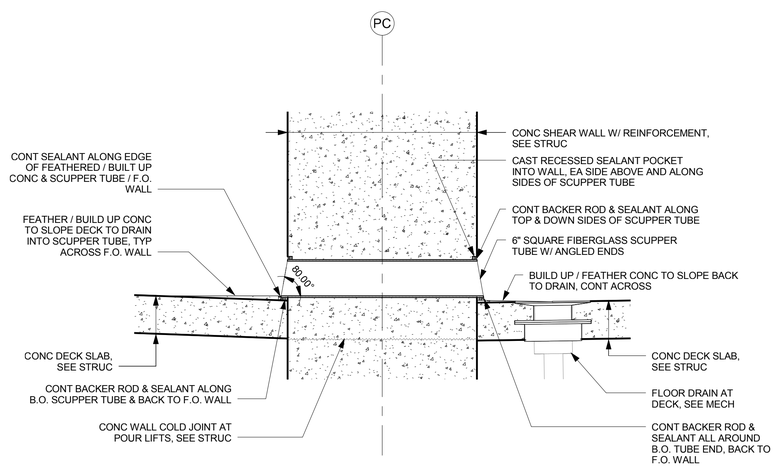

8 / AP501 PG - Typ Shear Wall Scupper
Scale: 1" = 1'-0"

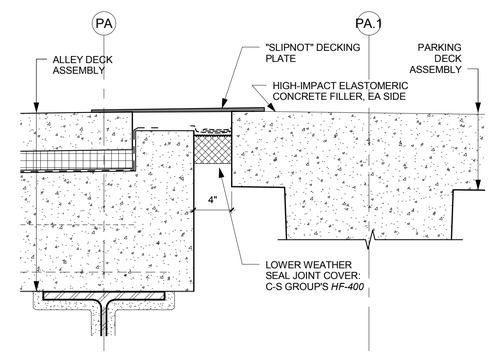

1 / AP501 Seismic Joint Cover - Level P1 Drive
Scale: 1 1/2" = 1'-0"

AS BUILT DRAWING
THIS DRAWING HAS BEEN PREPARED FROM CONTRACTOR FURNISHED INFORMATION. KUMIN ASSOCIATES, INC. MAKES NO WARRANTY, EXPRESSED OR IMPLIED, WITH REGARD TO THE ACCURACY OR COMPLETENESS OF THE INFORMATION NOW RECORDED IN THIS DRAWING. KUMIN ASSOCIATES, INC. WILL NOT ASSUME ANY LIABILITY, PROFESSIONAL OBLIGATION OR RISK THAT MIGHT OCCUR DUE TO THE RE-USE OF THIS INFORMATION.

KUMIN
ARCHITECTURE INTERIORS PLANNING
9101 JEWEL LAKE ROAD, SUITE 200
ANCHORAGE, AK 99502
907.272.5915 FAX 272.5917

NEESE CONSTRUCTION, INC.

Childrens Dental Clinic Building

4441 Diplomacy Drive, Anchorage AK 99508

Southcentral Foundation

No.	Description	Date

Drawn By: SS
Checked By: JS
Date: 24 DEC 2018
Phase: RECORD DRAWINGS
Job No: 21519.00
SHEET TITLE: Exterior Details

SHEET NO: AP501

14/2019 2:14:03 AM

RECORD DRAWINGS

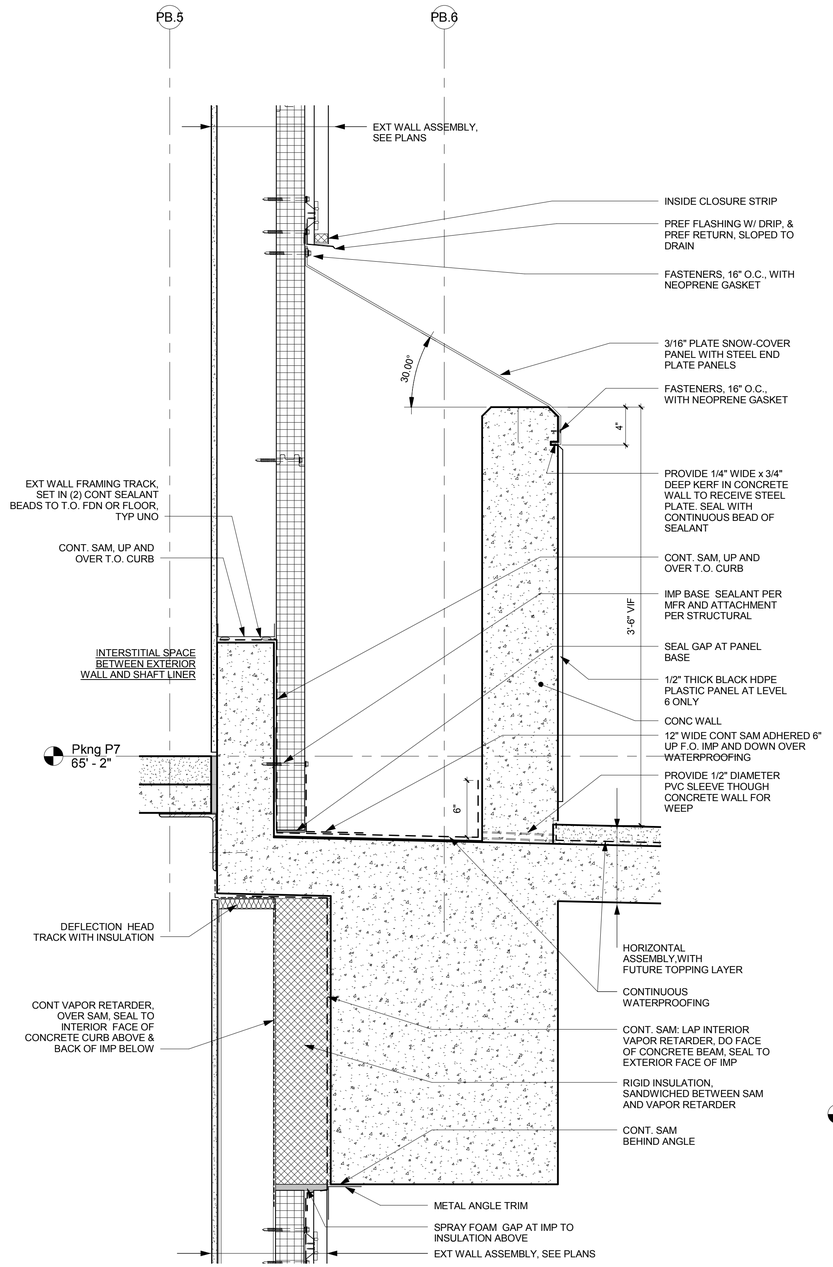

3 PG - Deck Curb & Conc Stop - L6, L7 at SP1
1 1/2" = 1'-0"

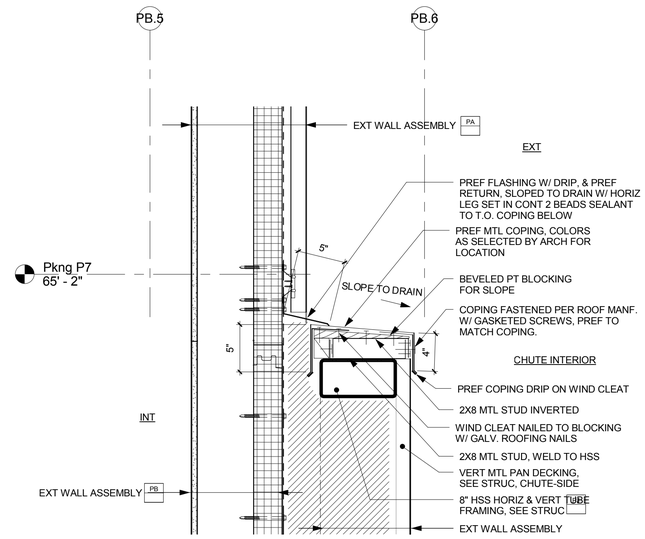

1 PG - Snow Chute - L7 at Elev 1
1 1/2" = 1'-0"

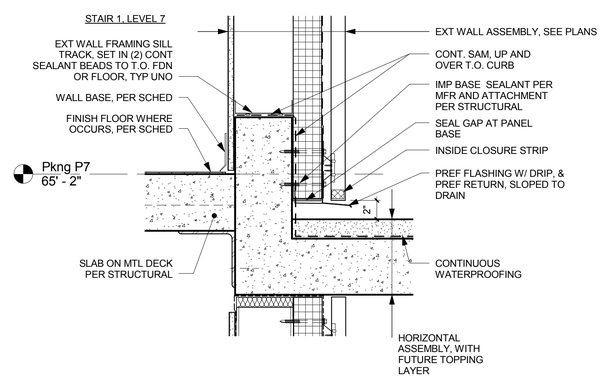

2 PG - Deck Curb - L7 at Stair 1
1 1/2" = 1'-0"

AS BUILT DRAWING

THIS DRAWING HAS BEEN PREPARED FROM CONTRACTOR FURNISHED INFORMATION. KUMIN ASSOCIATES, INC. MAKES NO WARRANTY, EXPRESSED OR IMPLIED, WITH REGARD TO THE ACCURACY OR COMPLETENESS OF THE INFORMATION NOW RECORDED IN THIS DRAWING. KUMIN ASSOCIATES, INC. WILL NOT ASSUME ANY LIABILITY, PROFESSIONAL OBLIGATION OR RISK THAT MIGHT OCCUR DUE TO THE RE-USE OF THIS INFORMATION.

KUMIN
ARCHITECTURE INTERIORS PLANNING
9101 JEWEL LAKE ROAD
ANCHORAGE, AK 99502
907.272.5915 CA LICENSE: AC-25231

NEESE CONSTRUCTION, INC.

Childrens Dental Clinic Building

4441 Diplomacy Drive, Anchorage AK 99508

Southcentral Foundation

No.	Description	Date

Drawn By: CN
Checked By: SS
Date: 24 DEC 2018
Phase: RECORD DRAWINGS
Job No: 21519.00
SHEET TITLE: Exterior Details

SHEET NO:

AP502

1/4/2019 2:14:03 AM

RECORD DRAWINGS

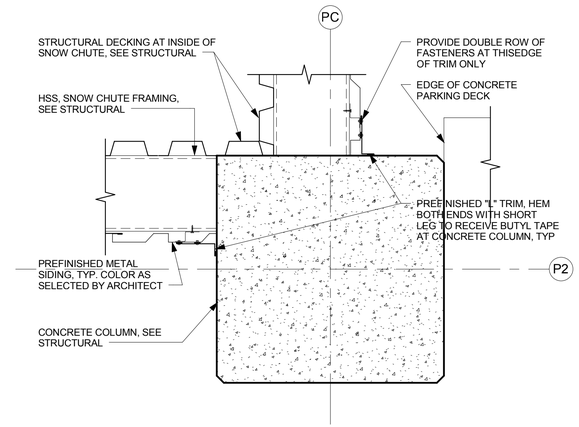

9 AP503 PG - Siding to Concrete Column at Snow Chute
Scale: 1 1/2" = 1'-0"

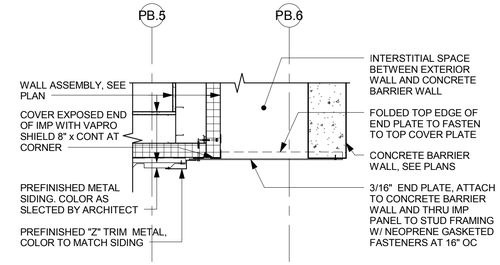

6 AP503 Snow Cover End Plate - Level 7
Scale: 3/4" = 1'-0"

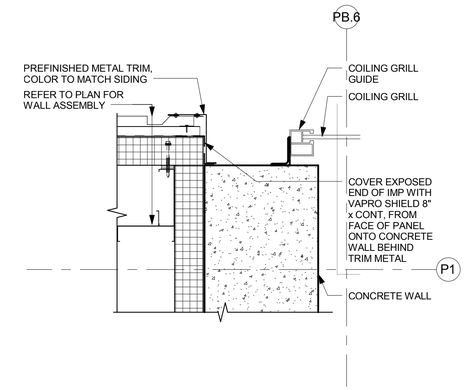

3 AP503 PG - Siding O/S Corner at Snow Chute P1 - Level P1
Scale: 1 1/2" = 1'-0"

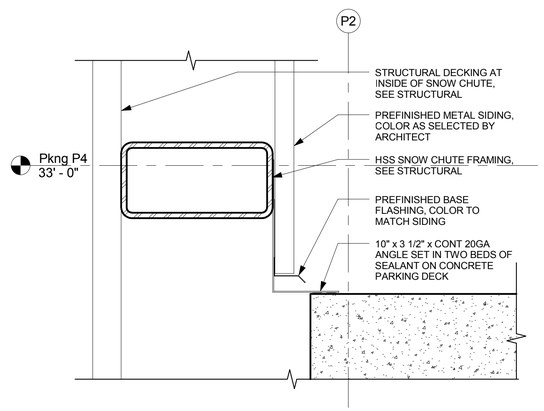

8 AP503 PG - Siding Base to Parking Deck at Snow Chute
Scale: 3" = 1'-0"

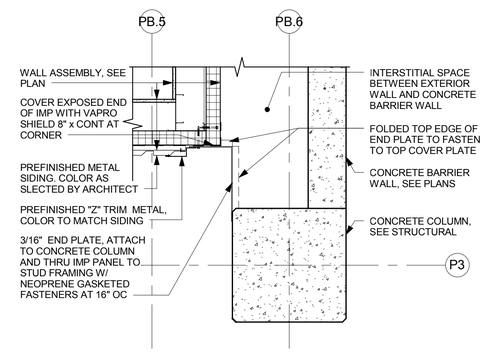

5 AP503 Snow Cover End Plate to Column- Level 6
Scale: 3/4" = 1'-0"

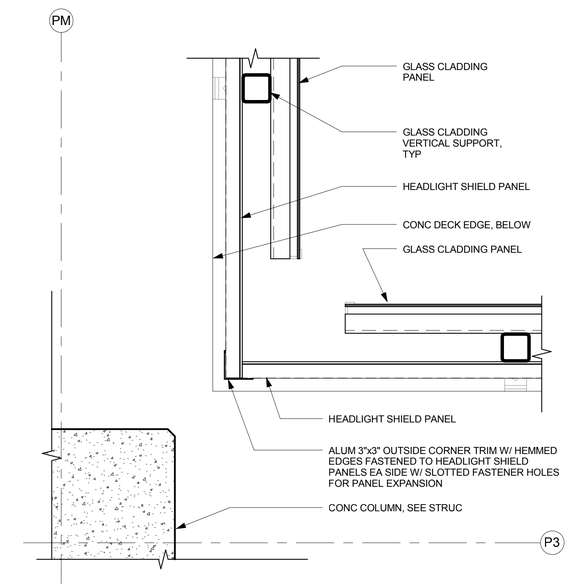

2 AP503 Typ Headlight Shield Panel Inside Corner (Plan)
Scale: 1 1/2" = 1'-0"

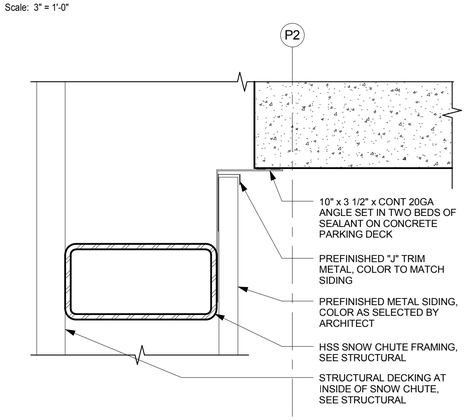

7 AP503 PG - Siding Head to Parking Deck at Snow Chute
Scale: 3" = 1'-0"

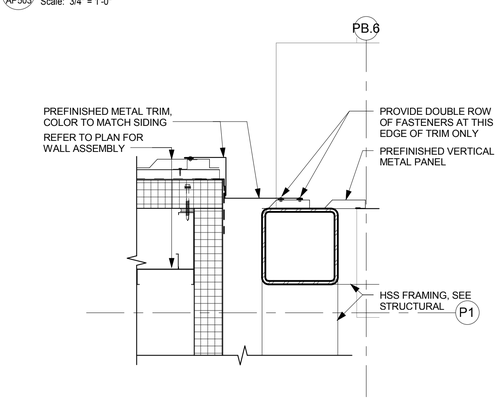

4 AP503 PG - Siding O/S Corner at Snow Chute P1 - Level P2 - P7
Scale: 1 1/2" = 1'-0"

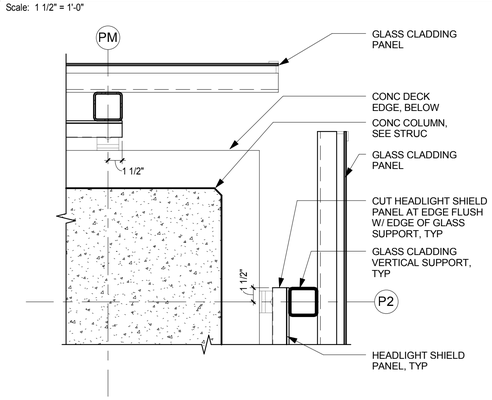

1 AP503 Typ Headlight Shield Panel Outside Corner (Plan)
Scale: 1 1/2" = 1'-0"

RECORD DRAWINGS

AS BUILT DRAWING

THIS DRAWING HAS BEEN PREPARED FROM CONTRACTOR FURNISHED INFORMATION. KUMIN ASSOCIATES, INC. MAKES NO WARRANTY, EXPRESSED OR IMPLIED, WITH REGARD TO THE ACCURACY OR COMPLETENESS OF THE INFORMATION NOW RECORDED IN THIS DRAWING. KUMIN ASSOCIATES, INC. WILL NOT ASSUME ANY LIABILITY, PROFESSIONAL OBLIGATION OR RISK THAT MIGHT OCCUR DUE TO THE RE-USE OF THIS INFORMATION.

KUMIN
ARCHITECTURE INTERIORS PLANNING
1049 W 5th AVENUE, ANCHORAGE, AK 99501
907.272.5863 FAX 272.5301
CA LICENSE: AC-25231
NEESE CONSTRUCTION, INC.

Childrens Dental Clinic Building

4441 Diplomacy Drive, Anchorage AK 99508

Southcentral Foundation

No.	Description	Date

Drawn By: SS, JL
Checked By: JS
Date: 24 DEC 2018
Phase: RECORD DRAWINGS
Job No: 21519.00
SHEET TITLE: Exterior Details

SHEET NO:

AP503

1/4/2019 2:14:10 AM

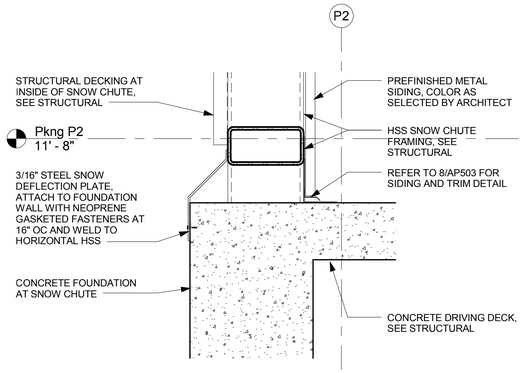

8 AP504 PG - Snow Chute P1 Deflection Plate at Level P2
Scale: 1 1/2" = 1'-0"

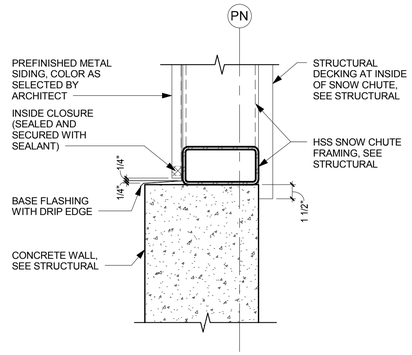

6 AP504 Siding Base Flashing to Concrete Wall at Snow Chute
Scale: 1 1/2" = 1'-0"

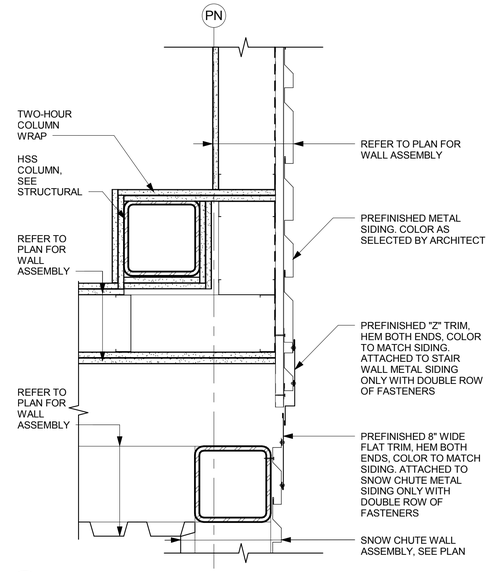

4 AP504 PG - Siding Transition at Snow Chute P2 - Level P1-N - P6-N North Side
Scale: 1 1/2" = 1'-0"

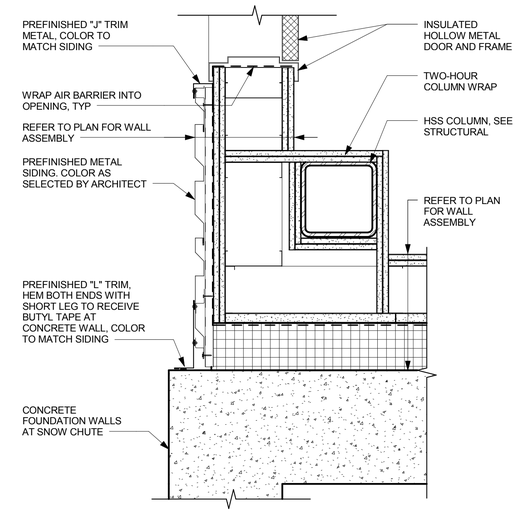

2 AP504 PG - Exterior Siding Transition at Snow Chute P2 - Level P0-N South Side
Scale: 1 1/2" = 1'-0"

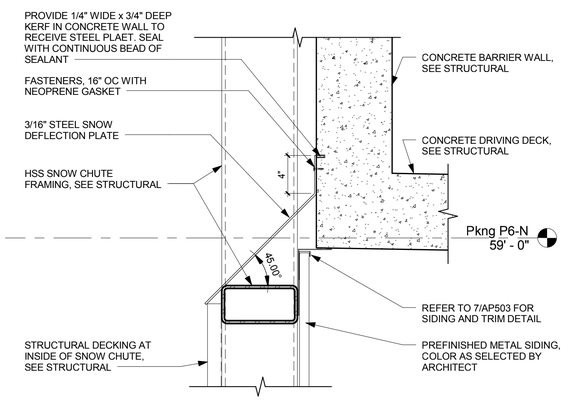

7 AP504 PG - Snow Chute P2 Deflection Plate at Level P6-N
Scale: 1 1/2" = 1'-0"

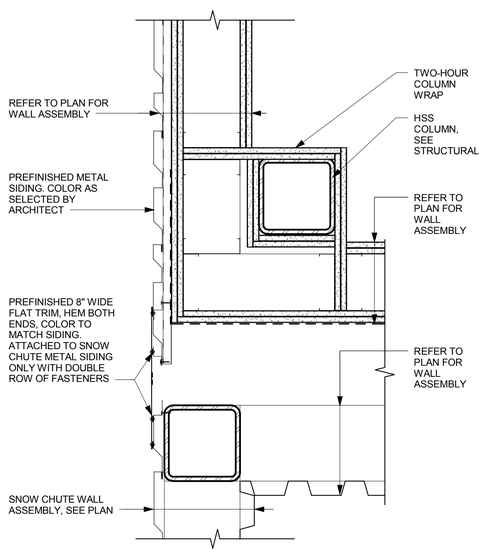

5 AP504 PG - Siding Transition at Snow Chute P2 - Level P1-N - P6-N South Side
Scale: 1 1/2" = 1'-0"

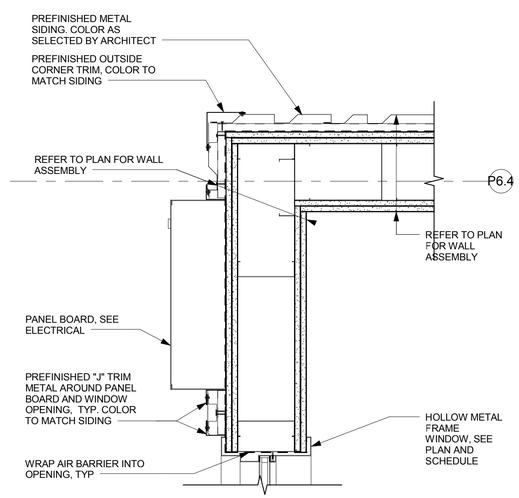

3 AP504 PG - Electrical Panel at Vertical Metal Siding - Level P0-N
Scale: 1 1/2" = 1'-0"

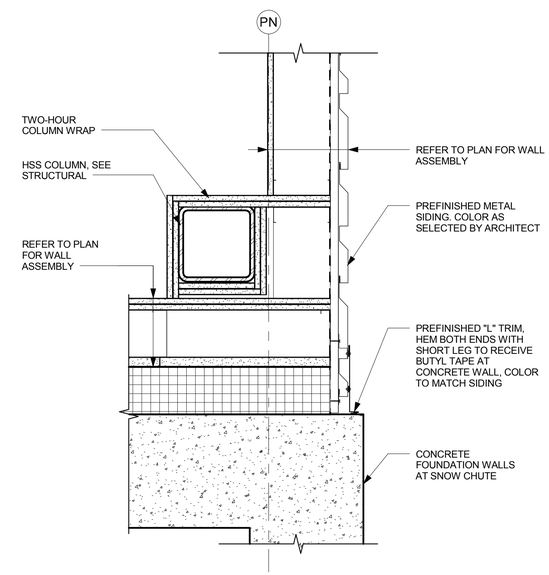

1 AP504 PG - Exterior Siding Transition at Snow Chute P2 - Level P0-N North side
Scale: 1 1/2" = 1'-0"

RECORD DRAWINGS

AS BUILT DRAWING

THIS DRAWING HAS BEEN PREPARED FROM CONTRACTOR FURNISHED INFORMATION. KUMIN ASSOCIATES, INC. MAKES NO WARRANTY, EXPRESSED OR IMPLIED, WITH REGARD TO THE ACCURACY OR COMPLETENESS OF THE INFORMATION NOW RECORDED IN THIS DRAWING. KUMIN ASSOCIATES, INC. WILL NOT ASSUME ANY LIABILITY, PROFESSIONAL OBLIGATION OR RISK THAT MIGHT OCCUR DUE TO THE RE-USE OF THIS INFORMATION.

KUMIN
ARCHITECTURE INTERIORS PLANNING
1049 W 5th AVENUE, SUITE 200
ANCHORAGE, AK 99501
907-272-5863 CA LICENSE: AC25291
NEESE CONSTRUCTION, INC.

Childrens Dental Clinic Building

4441 Diplomacy Drive, Anchorage AK 99508

Southcentral Foundation

No.	Description	Date

Drawn By: JL
Checked By: JS
Date: 24 DEC 2018
Phase: RECORD DRAWINGS
Job No: 21519.00
SHEET TITLE: Exterior Details

SHEET NO:

AP504

14/2019 2:14:14 AM

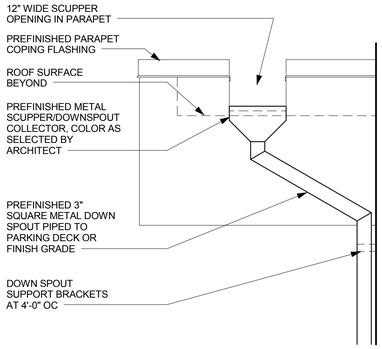

8 / AP520 PG - Downspout Partial Elevation
Scale: 3/4" = 1'-0"

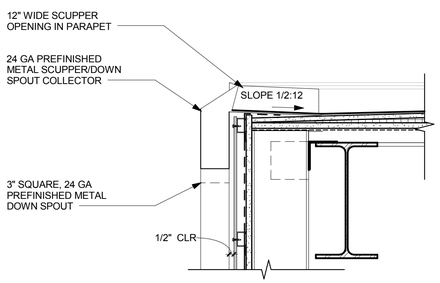

NOTE: REFER TO PLAN FOR ROOF ASSEMBLY.

6 / AP520 PG - Roof Scupper Detail
Scale: 1 1/2" = 1'-0"

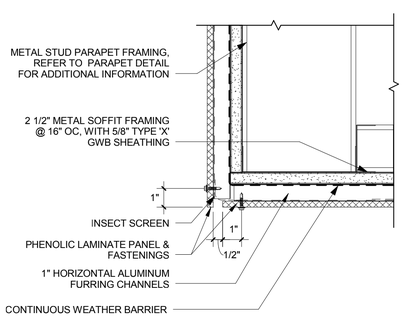

7 / AP520 Typical Soffit - PLP to PLP Fascia
Scale: 3" = 1'-0"

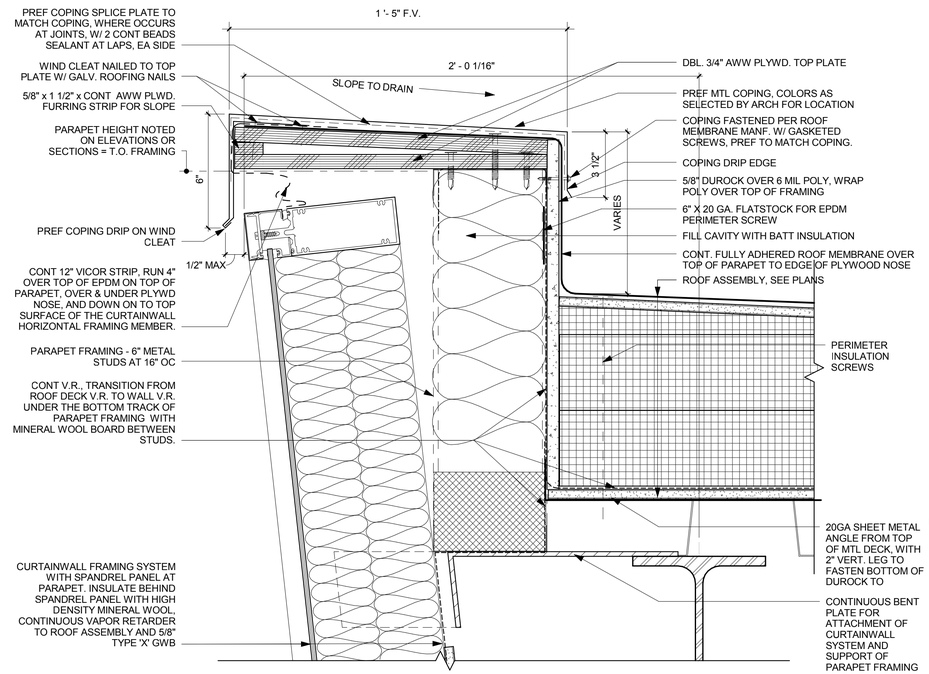

5 / AP520 Parapet at Curtainwall - Skybridge
Scale: 3" = 1'-0"

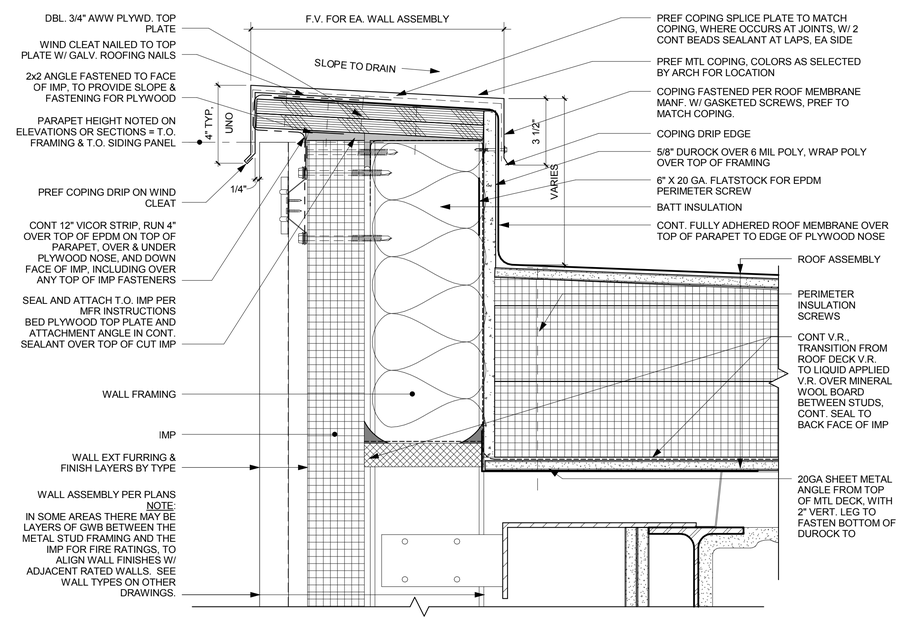

4 / AP520 Typical Parapet at Metal Panel
Scale: 3" = 1'-0"

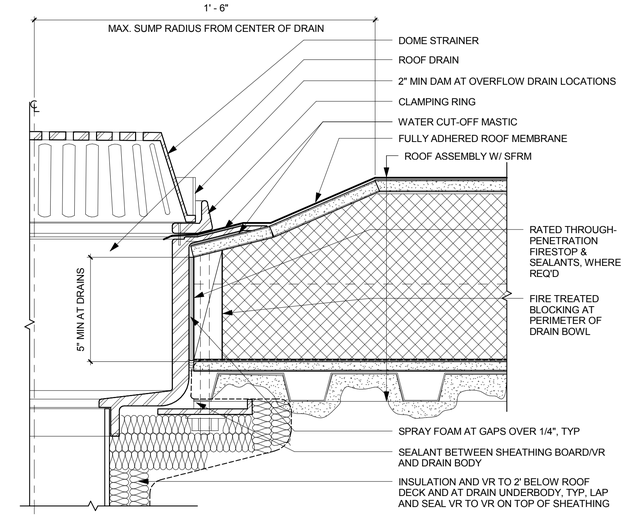

3 / AP520 Typical Roof Drain Detail
Scale: 3" = 1'-0"

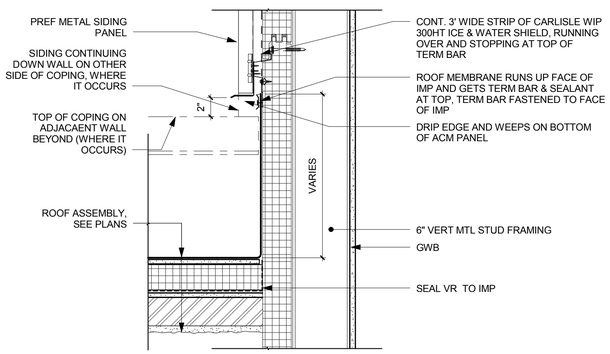

NOTE: DETAIL SIMILAR AT OTHER CANOPY ROOFS, WALL ASSEMBLIES MAY VARY.

2 / AP520 Typical Canopy Roof to Wall Detail
Scale: 1 1/2" = 1'-0"

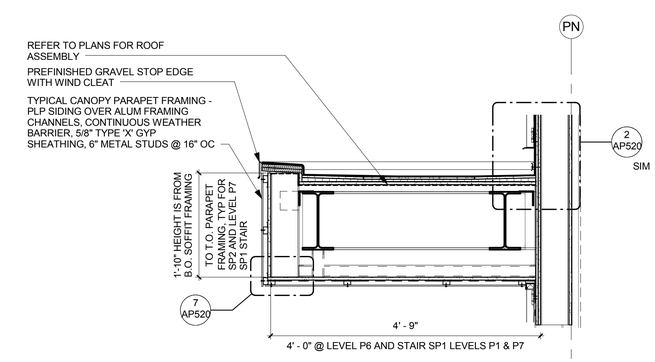

1 / AP520 PG - Stair SP2 - North Canopy Section
Scale: 3/4" = 1'-0"

AS BUILT DRAWING
THIS DRAWING HAS BEEN PREPARED FROM CONTRACTOR FURNISHED INFORMATION. KUMIN ASSOCIATES, INC. MAKES NO WARRANTY, EXPRESSED OR IMPLIED, WITH REGARD TO THE ACCURACY OR COMPLETENESS OF THE INFORMATION NOW RECORDED IN THIS DRAWING. KUMIN ASSOCIATES, INC. WILL NOT ASSUME ANY LIABILITY, PROFESSIONAL OBLIGATION OR RISK THAT MIGHT OCCUR DUE TO THE RE-USE OF THIS INFORMATION.

KUMIN
ARCHITECTURE INTERIORS PLANNING
1049 W 5th AVENUE, ANCHORAGE, AK 99501
907-272-5863 FEDEX
CA LICENSE: AC-25201
NEESE CONSTRUCTION, INC.

Childrens Dental Clinic Building

4441 Diplomacy Drive, Anchorage AK 99508
Southcentral Foundation

No.	Description	Date

Drawn By: JL
Checked By: JS
Date: 24 DEC 2018
Phase: RECORD DRAWINGS
Job No: 21519.00
SHEET TITLE: Exterior Roof Details

SHEET NO:
AP520

1/4/2019 2:14:16 AM

RECORD DRAWINGS

AS BUILT DRAWING
THIS DRAWING HAS BEEN PREPARED FROM CONTRACTOR FURNISHED INFORMATION. KUMIN ASSOCIATES, INC. MAKES NO WARRANTY, EXPRESSED OR IMPLIED, WITH REGARD TO THE ACCURACY OR COMPLETENESS OF THE INFORMATION NOW RECORDED IN THIS DRAWING. KUMIN ASSOCIATES, INC. WILL NOT ASSUME ANY LIABILITY, PROFESSIONAL OBLIGATION OR RISK THAT MIGHT OCCUR DUE TO THE RE-USE OF THIS INFORMATION.

KUMIN
ARCHITECTURE INTERIORS PLANNING
9101 E. DIMOND BLVD. ANCHORAGE, AK 99507
907.272.5600 FAX 907.272.5601
CA LICENSE: AC-22231

NEESE CONSTRUCTION, INC.

SKYBRIDGE PARAPET AT PARKING GARAGE NOTES:

1. PROVIDE CONT WATERPROOFING SEAL AT ALL JOINTS AND CRACKS BETWEEN CONC SPANDREL PARAPET WALL AND COLUMNS AT GRIDS PA.1:P4 AND PA.1:P5 TO ENSURE COMPLETE WEATHERTIGHT ASSEMBLY
2. PROVIDE CONT WATERPROOFING SEAL AT ALL JOINTS AND CRACKS BETWEEN CONC SPANDREL PARAPET WALLS ALONG GRID PA.1, BETWEEN GRIDS P3-P4 AND P5-PG, AND COLUMNS AT GRIDS PA.1:P4 AND PA.1:P5 TO ENSURE COMPLETE WEATHERTIGHT ASSEMBLY
3. PROVIDE WATERPROOFING SEALER ON ALL EXTERIOR VERTICAL SURFACES OF CONC PARAPET WALLS ALONG GRID PA.1 BETWEEN GRIDS P3-P6
4. PROVIDE WATERPROOFING SEALER ON ALL EXTERIOR VERTICAL SURFACES OF CONC COLUMNS AT GRIDS PA.1:P4 AND PA.1:P5 ABOVE LEVEL P7 DECK
5. PROVIDE CONT WATERPROOFING SEAL AT JOINT BETWEEN CONC SPANDREL WALLS AND LEVEL P7 DECK ALONG GRID PA.1 BETWEEN GRIDS P3-P6

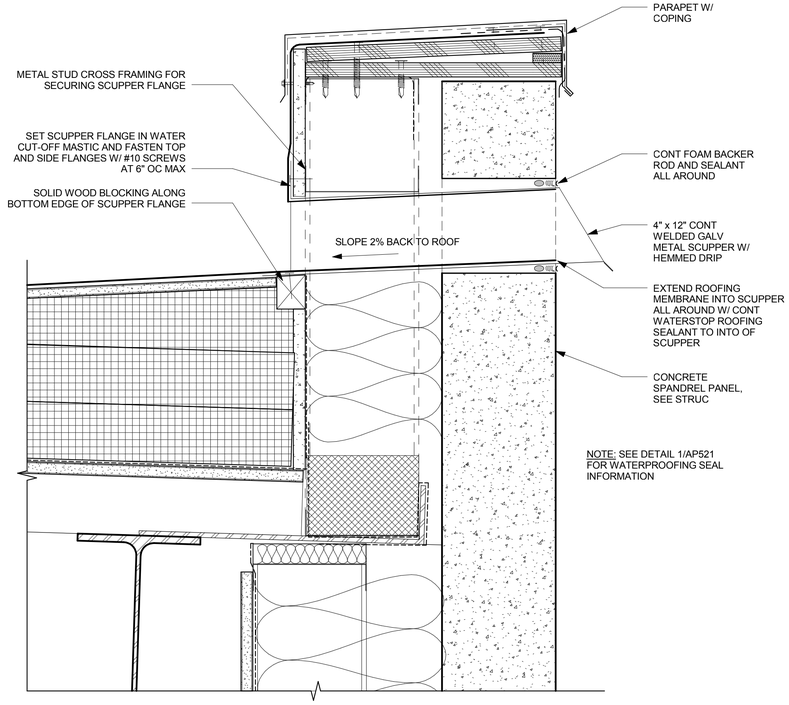

NOTE: WELD AND SEAL ALL SCUPPER SEAMS WATERTIGHT, AND AROUND ALL FLANGE CORNERS. REFER TO PLAN FOR ROOF ASSEMBLY. SEE SHEET AP520 FOR TYPICAL PARAPET CONSTRUCTION.

2 / AP521 Scupper in Spandrel Panel - Skybridge
Scale: 3" = 1'-0"

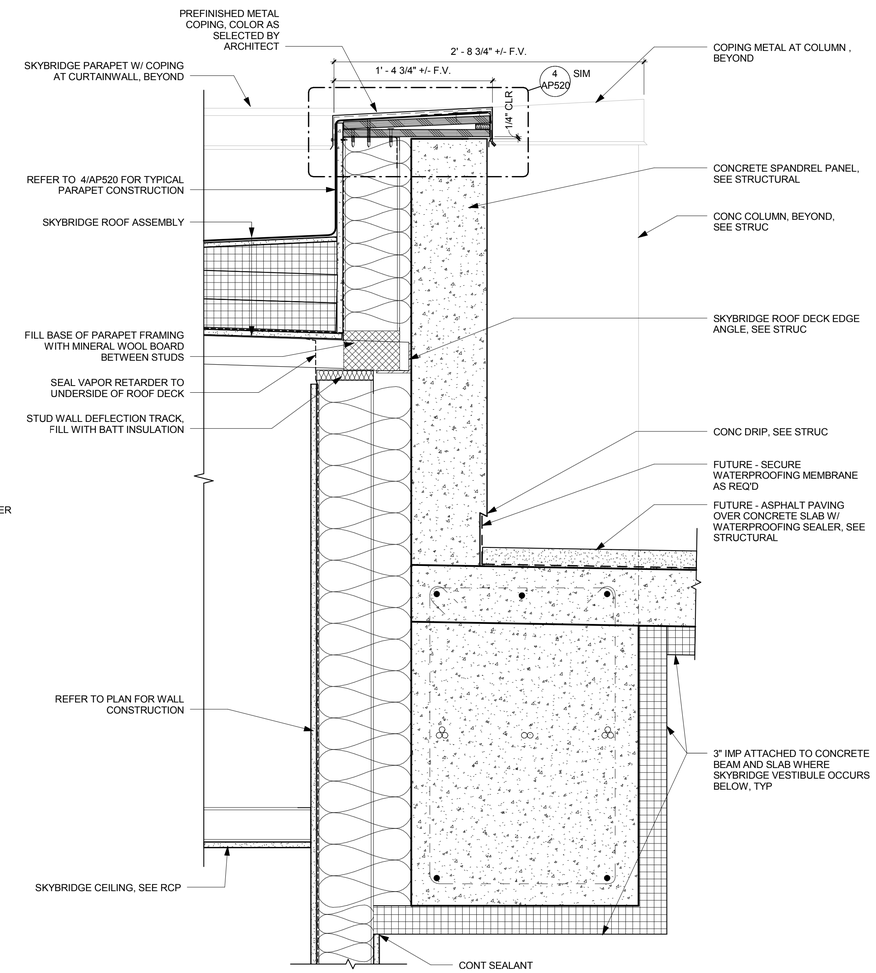

1 / AP521 Parapet at Spandrel Panel - Skybridge
Scale: 1 1/2" = 1'-0"

Childrens Dental Clinic Building

4441 Diplomacy Drive, Anchorage AK 99508
Southcentral Foundation

No.	Description	Date

Drawn By: JL
Checked By: JS
Date: 24 DEC 2018
Phase: RECORD DRAWINGS
Job No: 21519.00
SHEET TITLE: Exterior Roof Details

SHEET NO: AP521

04/02/19 2:14:17 AM

RECORD DRAWINGS

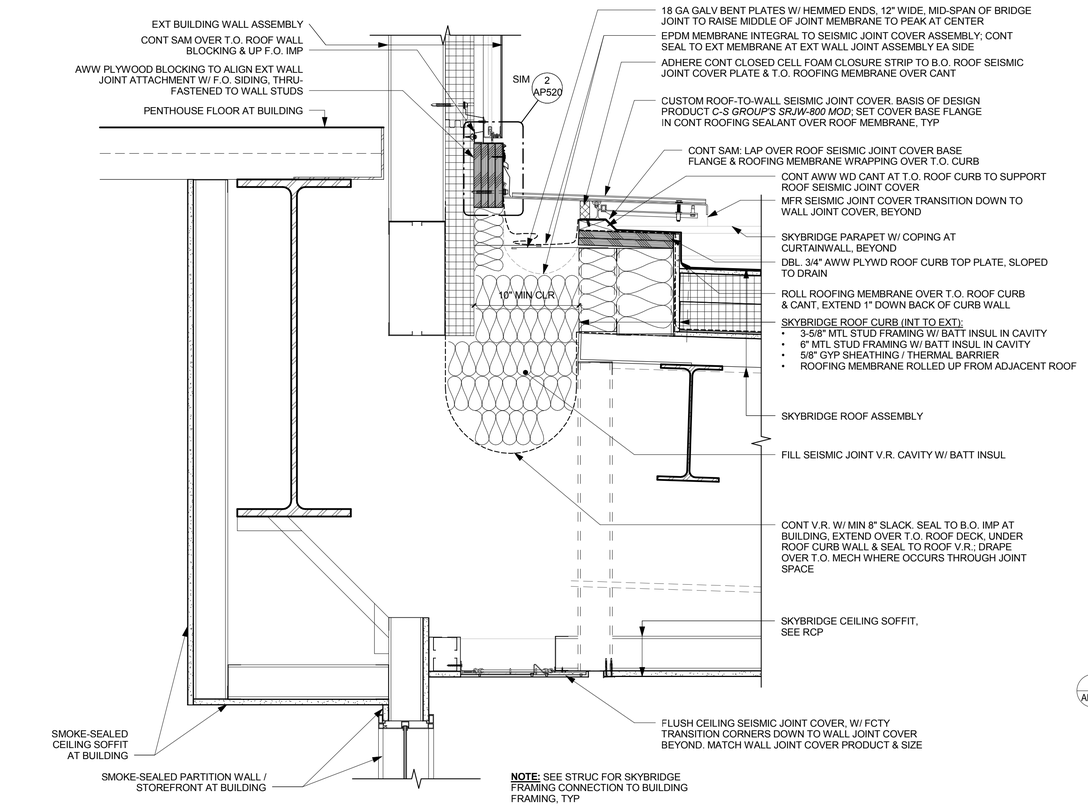

4 AP530 Skybridge Roof Seismic Joint
Scale: 1 1/2" = 1'-0"

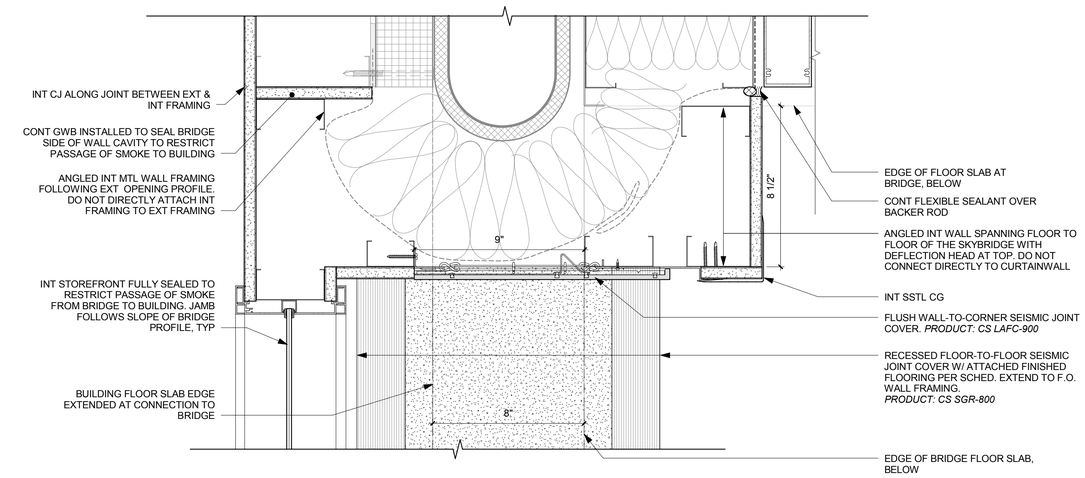

NOTES:
1. FOR EXT ASSEMBLY AND JOINT INFORMATION, SEE LEVEL 5 DETAIL, TYP
2. ALL DIMENSIONS EAST-WEST ARE IN PLAN PROJECTION PERPENDICULAR TO BRIDGE ANGLE, UNO

2 AP530 Vertical Seismic Joint - Level 4
Scale: 3" = 1'-0"

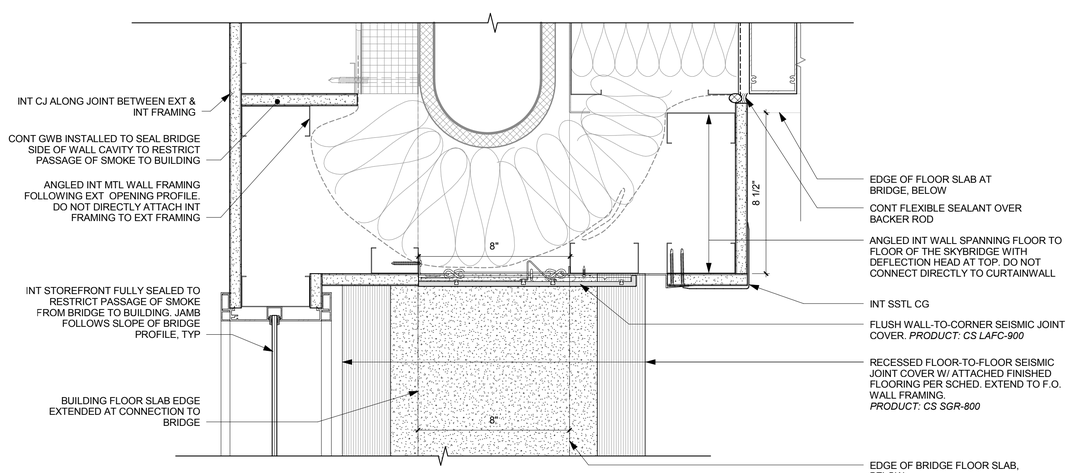

NOTES:
1. FOR EXT ASSEMBLY AND JOINT INFORMATION, SEE LEVEL 5 DETAIL, TYP
2. ALL DIMENSIONS EAST-WEST ARE IN PLAN PROJECTION PERPENDICULAR TO BRIDGE ANGLE, UNO

3 AP530 Vertical Seismic Joint - Level 3
Scale: 3" = 1'-0"

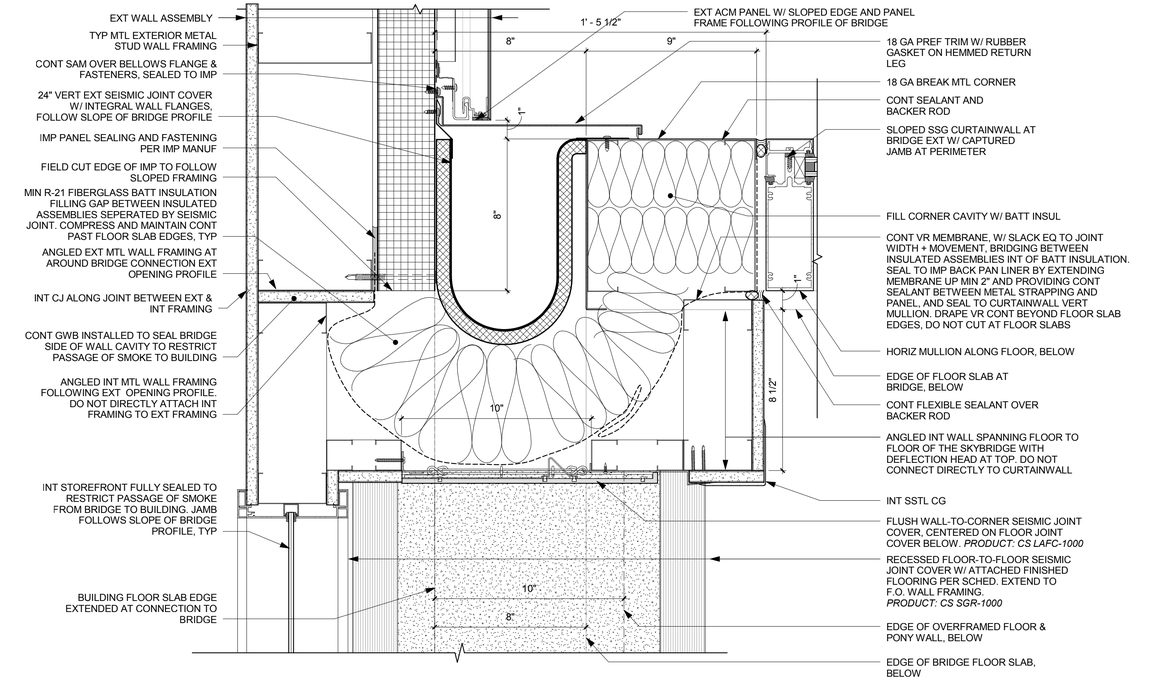

NOTES:
1. ALL EXT ASSEMBLY AND JOINT INFORMATION APPLIES TO LEVEL 3 & 4 DETAILS, TYP
2. ALL DIMENSIONS EAST-WEST ARE IN PLAN PROJECTION PERPENDICULAR TO BRIDGE ANGLE, UNO

1 AP530 Vertical Seismic Joint - Level 5
Scale: 3" = 1'-0"

SCALE: 3" = 1' - 0"
0' 2" 4" 8" 1' - 4"

RECORD DRAWINGS

AS BUILT DRAWING
THIS DRAWING HAS BEEN PREPARED FROM CONTRACTOR FURNISHED INFORMATION. KUMIN ASSOCIATES, INC. MAKES NO WARRANTY, EXPRESSED OR IMPLIED, WITH REGARD TO THE ACCURACY OR COMPLETENESS OF THE INFORMATION NOW RECORDED IN THIS DRAWING. KUMIN ASSOCIATES, INC. WILL NOT ASSUME ANY LIABILITY, PROFESSIONAL OBLIGATION OR RISK THAT MIGHT OCCUR DUE TO THE RE-USE OF THIS INFORMATION.

KUMIN
ARCHITECTURE INTERIORS PLANNING
9101 JEWELL RIDGE LANE, SUITE 201
CHULA VISTA, CA 91915
619.572.5800 FT.620
CA LICENSE: AC-25231

NEESE CONSTRUCTION, INC.

Childrens Dental Clinic Building

4441 Diplomacy Drive, Anchorage AK 99508
Southcentral Foundation

No.	Description	Date

Drawn By: SS, JL
Checked By: JS
Date: 24 DEC 2018
Phase: RECORD DRAWINGS
Job No: 21519.00
SHEET TITLE: Seismic Joint Details
SHEET NO: AP530

1/4/2019 2:14:19 AM

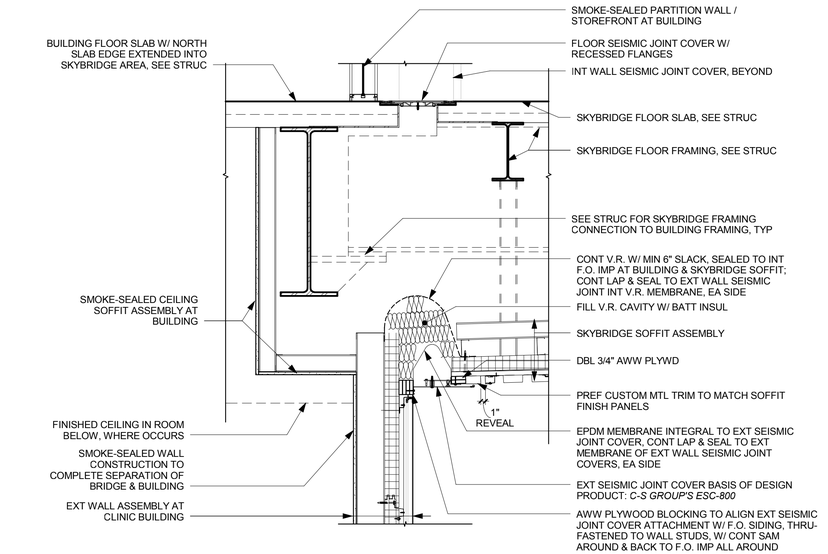

2 AP531 Skybridge Soffit at Office Bldg
Scale: 3/4" = 1'-0"

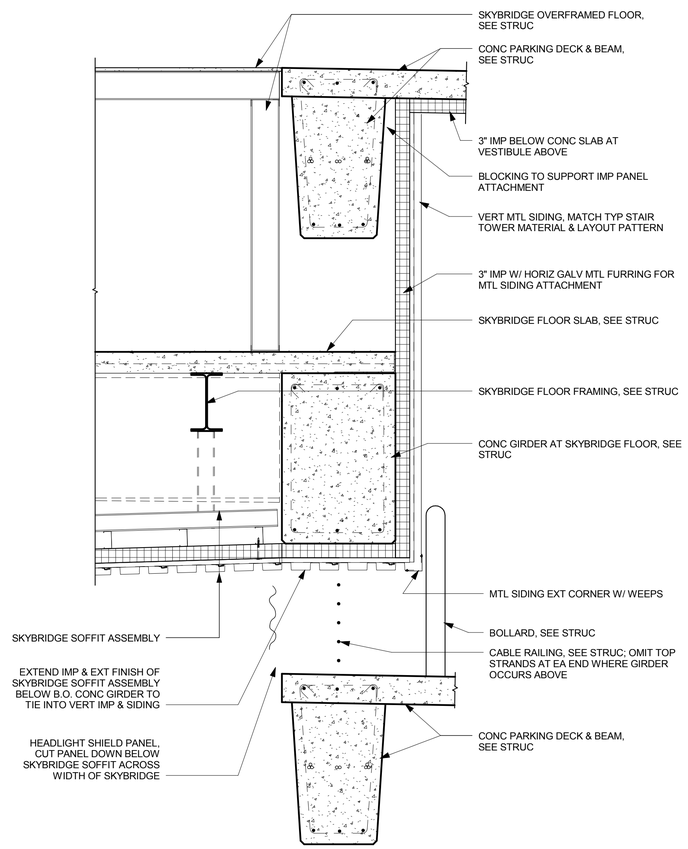

3 AP531 Skybridge Soffit at PG Beam
Scale: 3/4" = 1'-0"

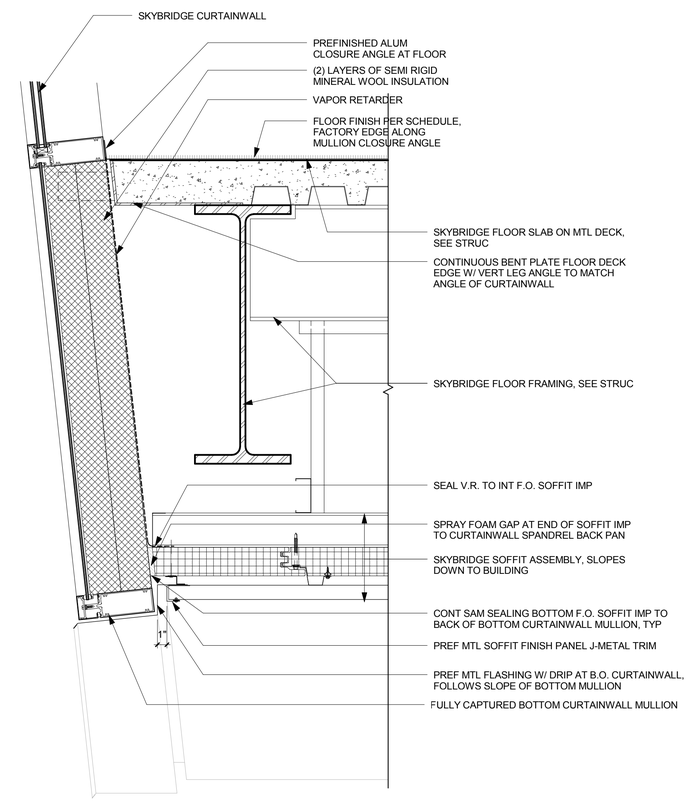

1 AP531 Skybridge Curtainwall to Exterior Soffit
Scale: 1 1/2" = 1'-0"

AS BUILT DRAWING

THIS DRAWING HAS BEEN PREPARED FROM CONTRACTOR FURNISHED INFORMATION. KUMIN ASSOCIATES, INC. MAKES NO WARRANTY, EXPRESSED OR IMPLIED, WITH REGARD TO THE ACCURACY OR COMPLETENESS OF THE INFORMATION NOW RECORDED IN THIS DRAWING. KUMIN ASSOCIATES, INC. WILL NOT ASSUME ANY LIABILITY, PROFESSIONAL OBLIGATION OR RISK THAT MIGHT OCCUR DUE TO THE RE-USE OF THIS INFORMATION.

KUMIN
ARCHITECTURE, INTERIORS, PLANNING
9101 JEWEL LAKE ROAD, SUITE 200
ANCHORAGE, AK 99502
907.272.5863 CA LICENSE: AC-25231

NEESE CONSTRUCTION, INC.

Childrens Dental Clinic Building

4441 Diplomacy Drive, Anchorage AK 99508

Southcentral Foundation

No.	Description	Date

Drawn By: SS, JL
Checked By: JS
Date: 24 DEC 2018
Phase: RECORD DRAWINGS
Job No: 21519.00
SHEET TITLE: Seismic & Skybridge to PG Details

SHEET NO:

AP531

14/2019 2:14:25 AM

RECORD DRAWINGS

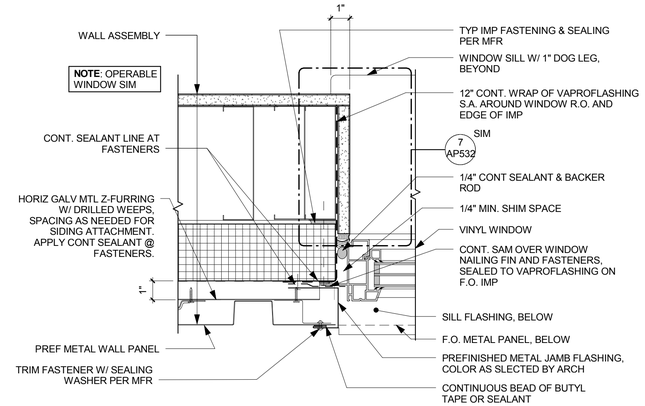

6 AP532 Vinyl Window Jamb at Metal Panel
Scale: 3" = 1'-0"

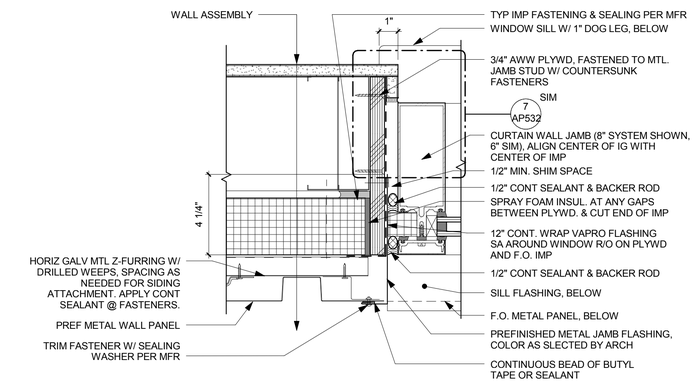

3 AP532 Curtainwall Jamb at Metal Panel
Scale: 3" = 1'-0"

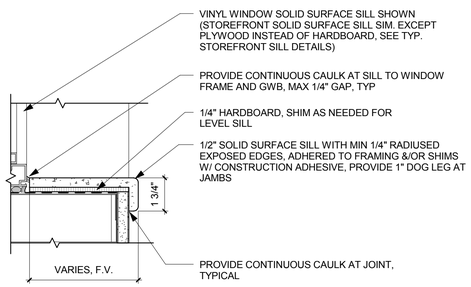

8 AP532 Typical Solid Surface Sill Detail @ Windows
Scale: 3" = 1'-0"

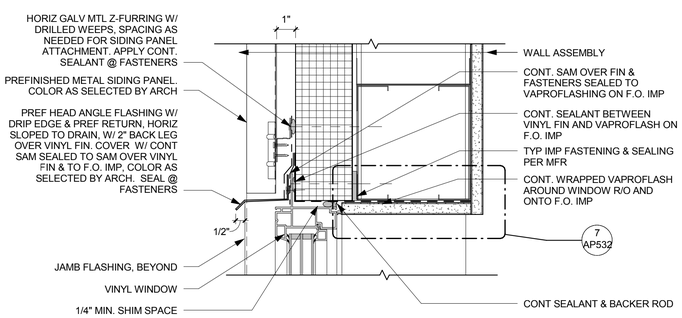

5 AP532 Vinyl Window Head at Metal Panel
Scale: 3" = 1'-0"

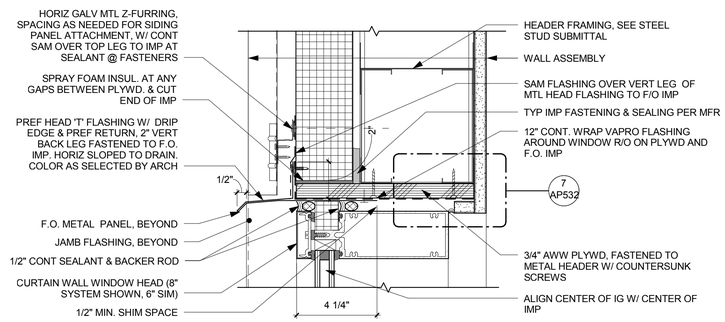

2 AP532 Curtainwall Head at Metal Panel
Scale: 3" = 1'-0"

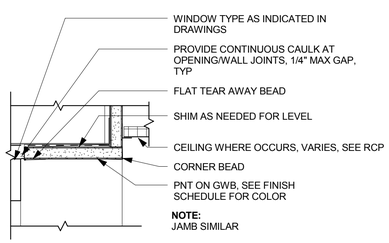

7 AP532 Typical Gypsum Head & Jamb @ Windows
Scale: 3" = 1'-0"

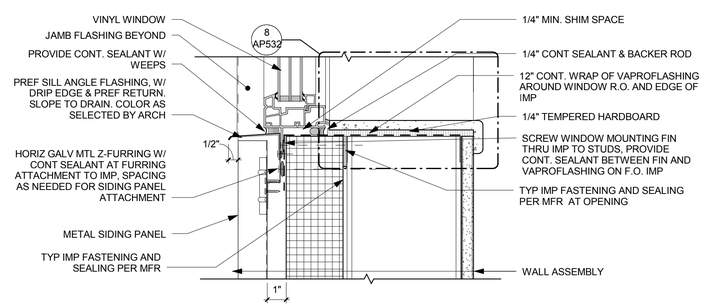

4 AP532 Vinyl Window Sill at Metal Panel
Scale: 3" = 1'-0"

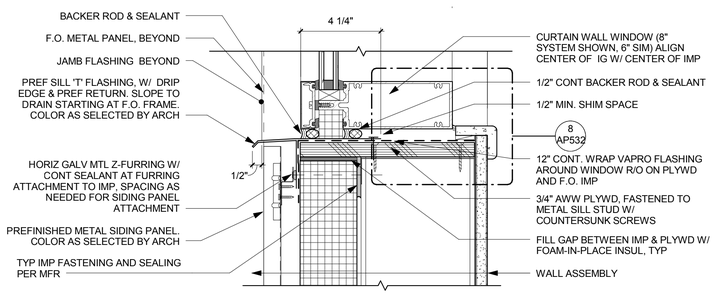

1 AP532 Curtainwall Sill at Metal Panel
Scale: 3" = 1'-0"

RECORD DRAWINGS

AS BUILT DRAWING
THIS DRAWING HAS BEEN PREPARED FROM CONTRACTOR FURNISHED INFORMATION. KUMIN ASSOCIATES, INC. MAKES NO WARRANTY, EXPRESSED OR IMPLIED, WITH REGARD TO THE ACCURACY OR COMPLETENESS OF THE INFORMATION NOW RECORDED IN THIS DRAWING. KUMIN ASSOCIATES, INC. WILL NOT ASSUME ANY LIABILITY, PROFESSIONAL OBLIGATION OR RISK THAT MIGHT OCCUR DUE TO THE RE-USE OF THIS INFORMATION.

KUMIN
ARCHITECTURE INTERIORS PLANNING
9101 JEWEL LAKE ROAD, SUITE 200
ANCHORAGE, AK 99502
907.272.5863 FAX 272.5201
CAA LICENSE: AK-25201

NEESE BUILDING CONSTRUCTION, INC.

Childrens Dental Clinic Building

4441 Diplomacy Drive, Anchorage AK 99508
Southcentral Foundation

No.	Description	Date

Drawn By: JL
Checked By: JS
Date: 24 DEC 2018
Phase: RECORD DRAWINGS
Job No: 21519.00
SHEET TITLE: Exterior Opening Details

SHEET NO:
AP532

1/4/2019 2:14:22 AM

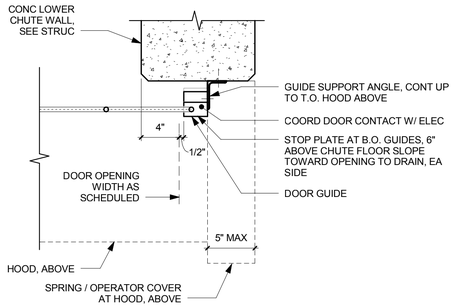

9 AP533 Typical Ext Overhead Rolling Grille Jamb Detail
Scale: 1 1/2" = 1'-0"

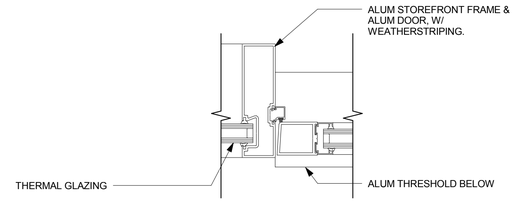

6 AP533 Storefront Door Jamb Detail at Door SP1-P1b
Scale: 3" = 1'-0"

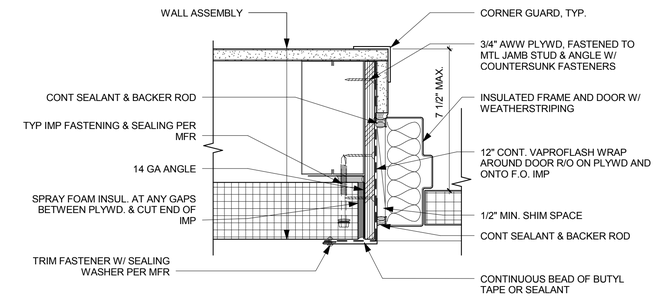

3 AP533 Ext HM Door Jamb Detail at SP1 - Level P0
Scale: 3" = 1'-0"

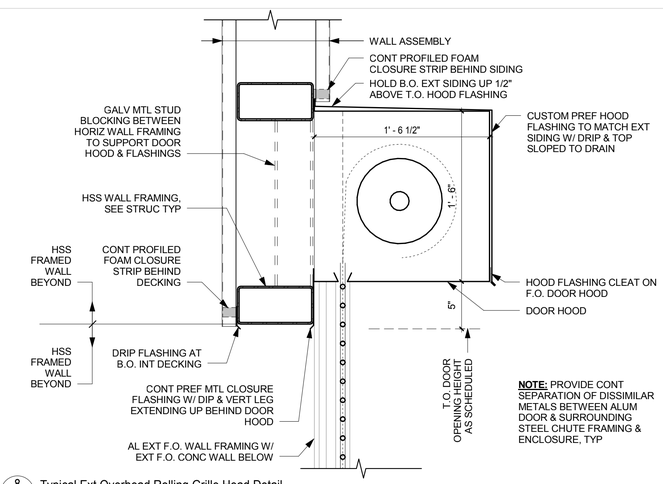

8 AP533 Typical Ext Overhead Rolling Grille Head Detail
Scale: 1 1/2" = 1'-0"

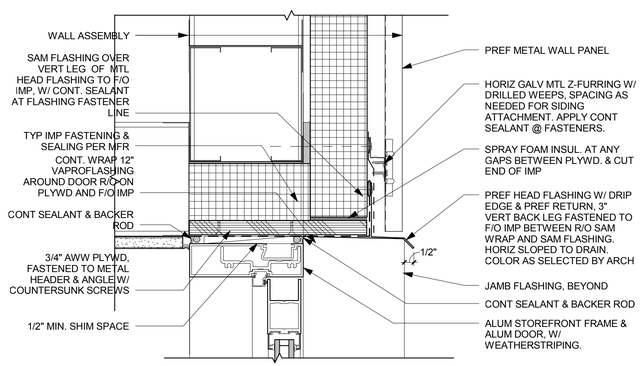

5 AP533 Storefront Door Head Detail at Door SP1-P1b
Scale: 3" = 1'-0"

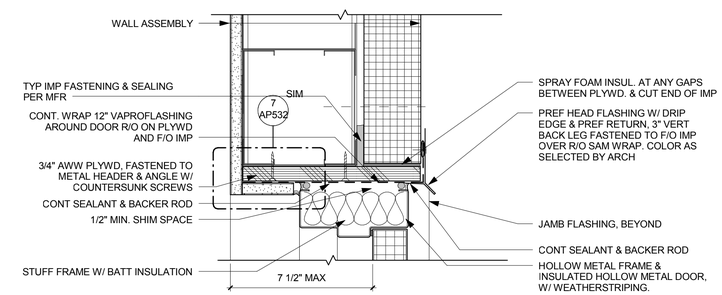

2 AP533 Ext HM Door Head Detail at SP1 - Level P0
Scale: 3" = 1'-0"

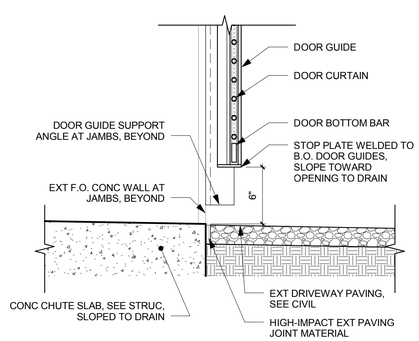

7 AP533 Typical Ext Overhead Rolling Grille Sill Detail
Scale: 1 1/2" = 1'-0"

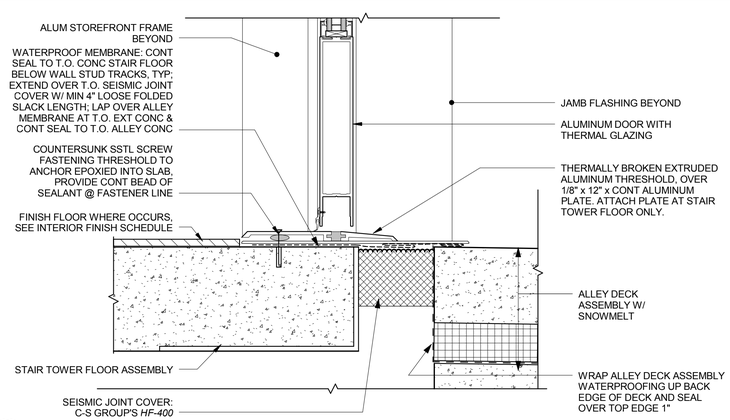

4 AP533 Storefront Door Sill Detail at Door SP1-P1b
Scale: 3" = 1'-0"

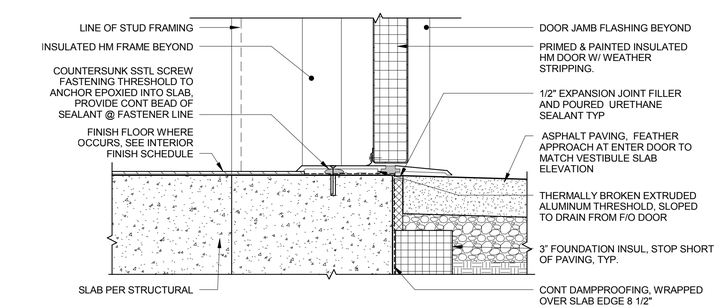

1 AP533 Ext HM Door Sill Detail at SP1 - Level P0
Scale: 3" = 1'-0"

RECORD DRAWINGS

AS BUILT DRAWING
THIS DRAWING HAS BEEN PREPARED FROM CONTRACTOR FURNISHED INFORMATION. KUMIN ASSOCIATES, INC. MAKES NO WARRANTY, EXPRESSED OR IMPLIED, WITH REGARD TO THE ACCURACY OR COMPLETENESS OF THE INFORMATION NOW RECORDED IN THIS DRAWING. KUMIN ASSOCIATES, INC. WILL NOT ASSUME ANY LIABILITY, PROFESSIONAL OBLIGATION OR RISK THAT MIGHT OCCUR DUE TO THE RE-USE OF THIS INFORMATION.

KUMIN
ARCHITECTURE INTERIORS PLANNING
9101 JEWEL LAKE ROAD
ANCHORAGE, AK 99502
907-272-5863 FEDEX
CA LICENSE: AC-25231

NEESE CONSTRUCTION, INC.

Childrens Dental Clinic Building
4441 Diplomacy Drive, Anchorage AK 99508
Southcentral Foundation

No.	Description	Date

Drawn By: JL, SS
Checked By: JS
Date: 24 DEC 2018
Phase: RECORD DRAWINGS
Job No: 21519.00
SHEET TITLE: Exterior Opening Details

SHEET NO:
AP533

04/2019 2:14:25 AM

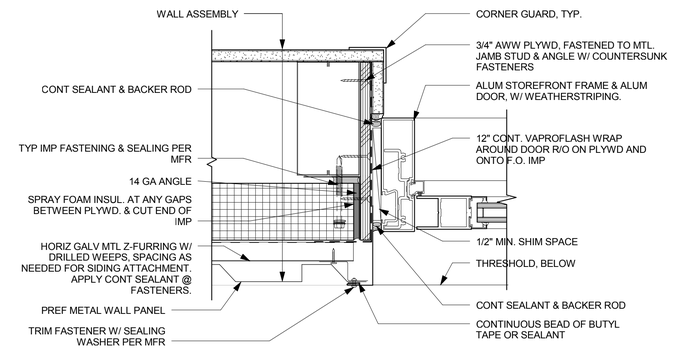

6 AP534 Typical Storefront Door Jamb Detail at SP1
Scale: 3" = 1'-0"

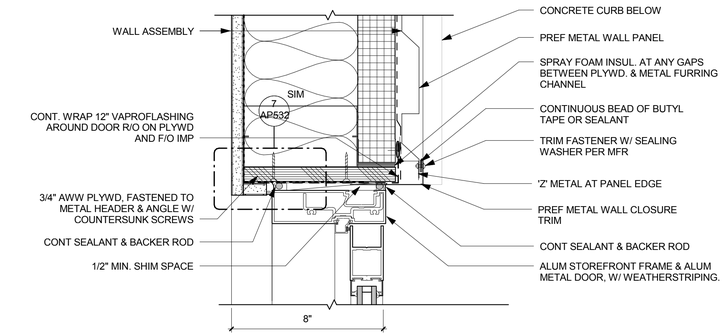

3 AP534 Typical Storefront Door Jamb Detail at PG/Skybridge Vestibule
Scale: 3" = 1'-0"

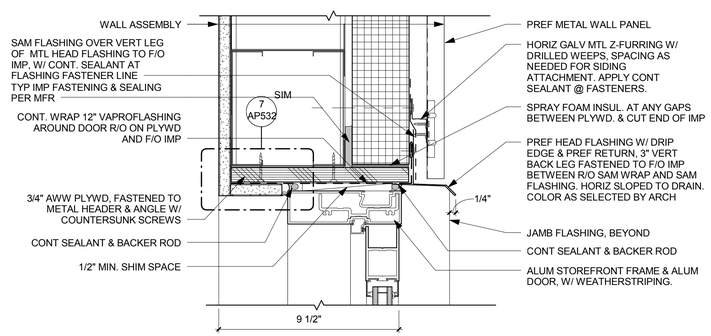

5 AP534 Typical Storefront Door Head Detail at SP1
Scale: 3" = 1'-0"

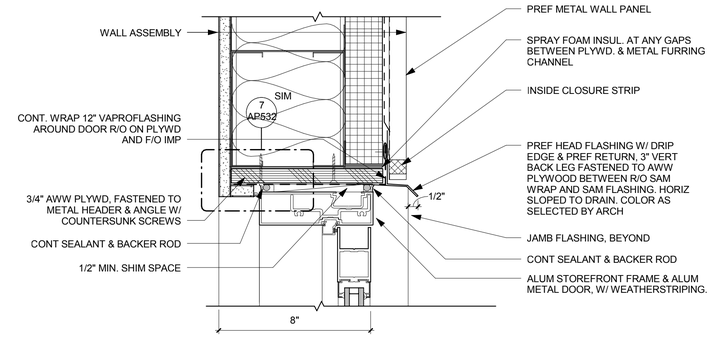

2 AP534 Typical Storefront Door Head Detail at PG/Skybridge Vestibule
Scale: 3" = 1'-0"

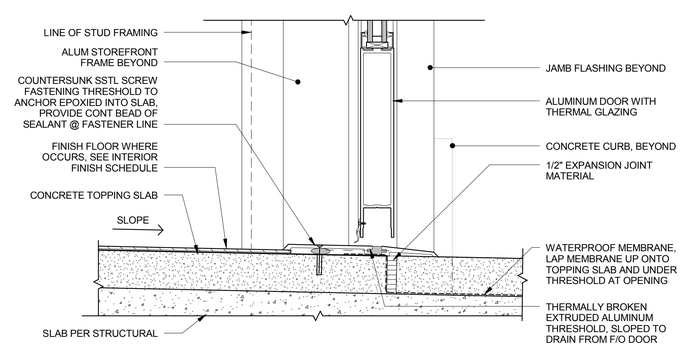

4 AP534 Storefront Door Sill Detail at PG/Skybridge Vestibule - Level P6
Scale: 3" = 1'-0"

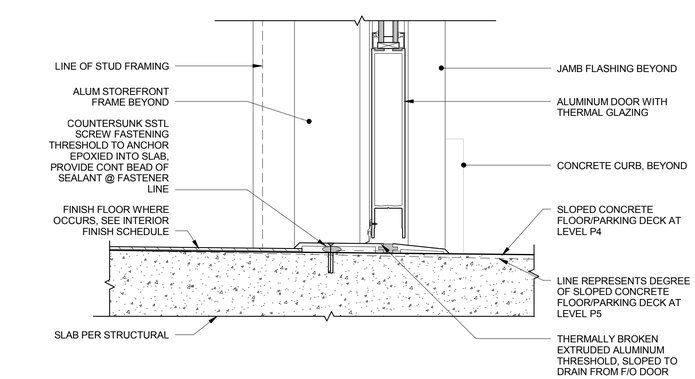

1 AP534 Storefront Door Sill Detail at PG/Skybridge Vestibule - Level P4 & P5
Scale: 3" = 1'-0"

RECORD DRAWINGS

AS BUILT DRAWING

THIS DRAWING HAS BEEN PREPARED FROM CONTRACTOR FURNISHED INFORMATION. KUMIN ASSOCIATES, INC. MAKES NO WARRANTY, EXPRESSED OR IMPLIED, WITH REGARD TO THE ACCURACY OR COMPLETENESS OF THE INFORMATION NOW RECORDED IN THIS DRAWING. KUMIN ASSOCIATES, INC. WILL NOT ASSUME ANY LIABILITY, PROFESSIONAL OBLIGATION OR RISK THAT MIGHT OCCUR DUE TO THE RE-USE OF THIS INFORMATION.

KUMIN
ARCHITECTURE INTERIORS PLANNING
9101 JEWEL LAKE ROAD ANCHORAGE, AK 99502
907-272-5863 FEDEX CALL NUMBER: AK 99501

NEESE CONSTRUCTION, INC.

Childrens Dental Clinic Building

4441 Diplomacy Drive, Anchorage AK 99508

Southcentral Foundation

No.	Description	Date

Drawn By: JLL
Checked By: JS
Date: 24 DEC 2018
Phase: RECORD DRAWINGS
Job No: 21519.00
SHEET TITLE: Exterior Opening Details

SHEET NO:

AP534

1/4/2019 2:14:25 AM

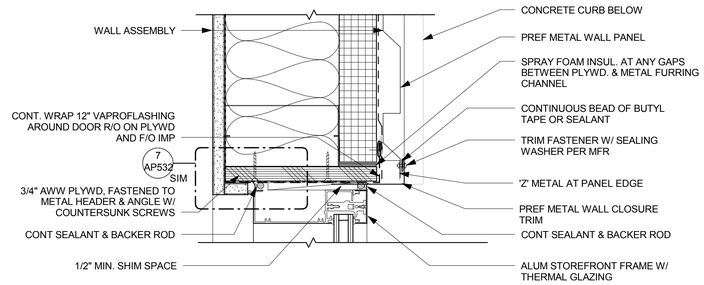

6 AP535 Typical Storefront Glazing Jamb Detail at PG/Skybridge Vestibule
Scale: 3" = 1'-0"

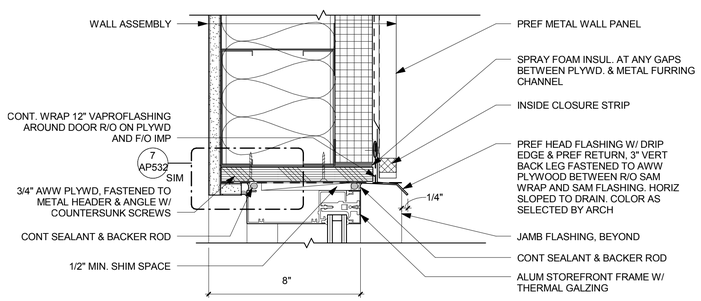

5 AP535 Typical Storefront Glazing Head Detail at PG/Skybridge Vestibule
Scale: 3" = 1'-0"

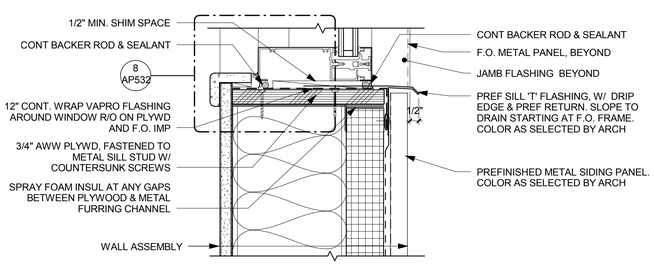

4 AP535 Typical Storefront Glazing Sill Detail at PG/Skybridge Vestibule
Scale: 3" = 1'-0"

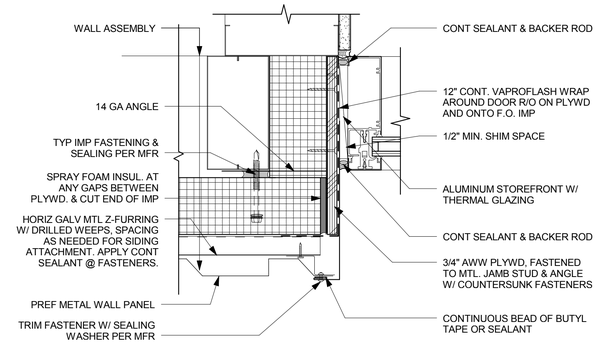

3 AP535 Storefront Glazing Jamb Detail at SP1
Scale: 3" = 1'-0"

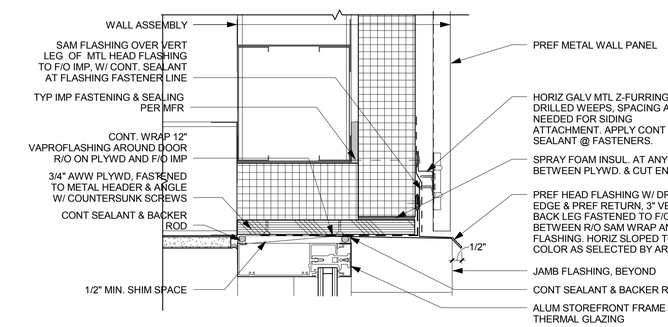

2 AP535 Storefront Glazing Head Detail at SP1
Scale: 3" = 1'-0"

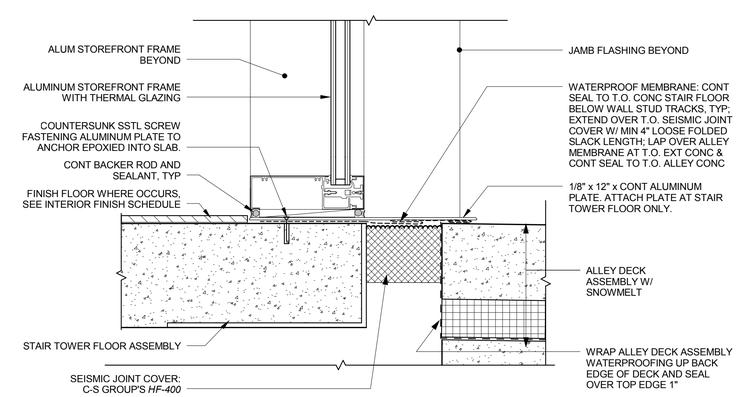

1 AP535 Storefront Glazing Sill Detail at SP1
Scale: 3" = 1'-0"

RECORD DRAWINGS

AS BUILT DRAWING

THIS DRAWING HAS BEEN PREPARED FROM CONTRACTOR FURNISHED INFORMATION. KUMIN ASSOCIATES, INC. MAKES NO WARRANTY, EXPRESSED OR IMPLIED, WITH REGARD TO THE ACCURACY OR COMPLETENESS OF THE INFORMATION NOW RECORDED IN THIS DRAWING. KUMIN ASSOCIATES, INC. WILL NOT ASSUME ANY LIABILITY, PROFESSIONAL OBLIGATION OR RISK THAT MIGHT OCCUR DUE TO THE RE-USE OF THIS INFORMATION.

KUMIN
ARCHITECTURE INTERIORS PLANNING
9101 JEWEL LAKE ROAD, ANCHORAGE, AK 99502
PH 907.272.5003 FX 272.5001
CAA LICENSE: AC-00001

NEESE BUILDING CONSTRUCTION, INC.

Childrens Dental Clinic Building

4441 Diplomacy Drive, Anchorage AK 99508
Southcentral Foundation

No.	Description	Date

Drawn By: JLL
Checked By: JS
Date: 24 DEC 2018
Phase: RECORD DRAWINGS
Job No: 21519.00
SHEET TITLE: Exterior Opening Details

SHEET NO:

AP535

1/4/2019 2:14:28 AM

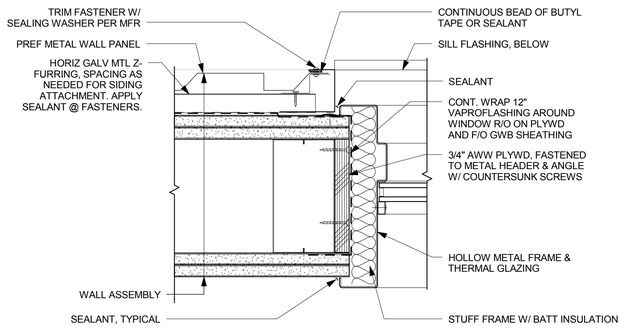

9 AP536 Ext 90 Min Rated HM Window Jamb Detail at SP2
Scale: 3" = 1'-0"

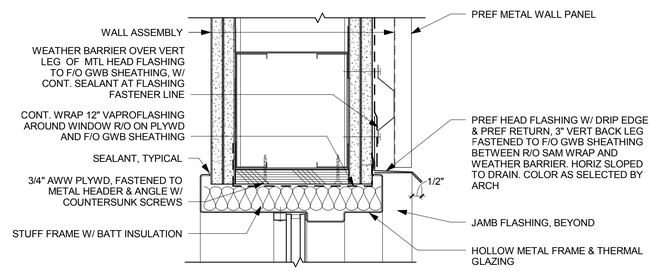

8 AP536 Ext 90 Min Rated HM Window Head Detail at SP2
Scale: 3" = 1'-0"

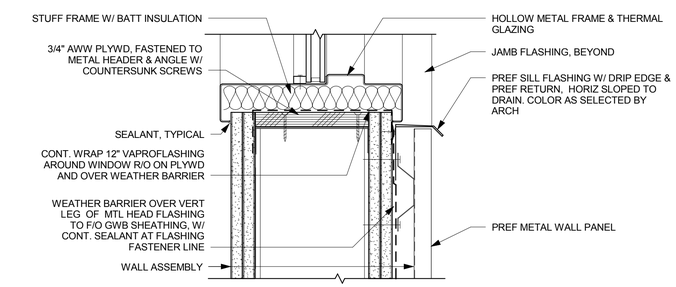

7 AP536 Ext 90 Min Rated HM Window Sill Detail at SP2
Scale: 3" = 1'-0"

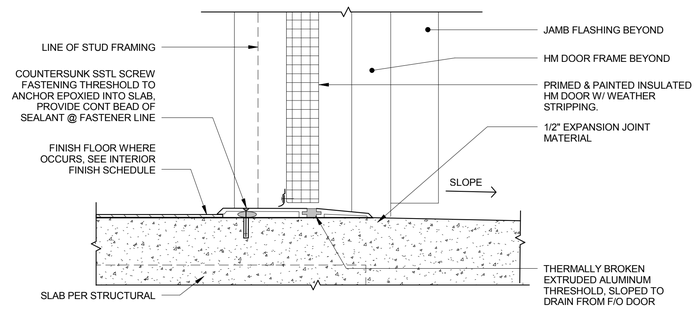

6 AP536 Ext HM Door Sill Detail at SP2 - Level PN6
Scale: 3" = 1'-0"

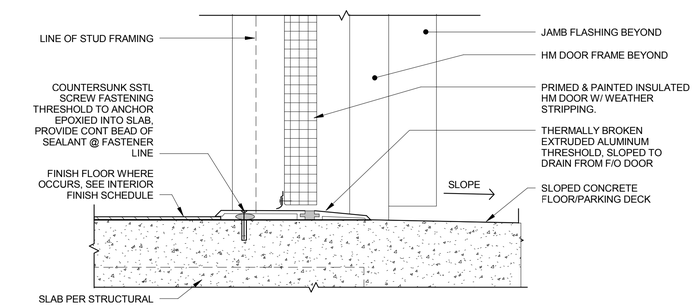

5 AP536 Ext HM Door Sill Detail at SP2- Level P1N - P5N
Scale: 3" = 1'-0"

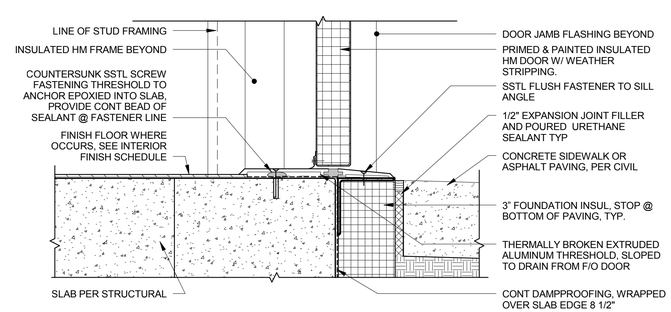

4 AP536 Ext HM Door Sill Detail at Door SP2-P0b
Scale: 3" = 1'-0"

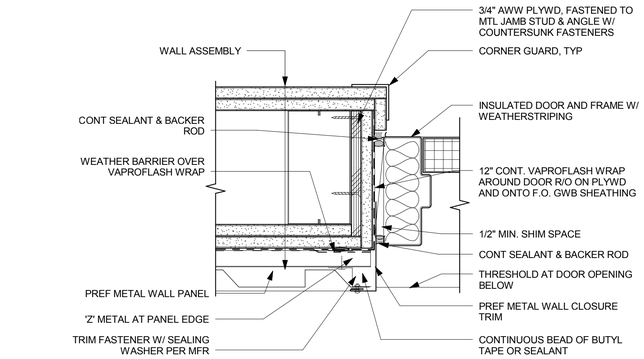

NOTE: DETAIL SIMILAR AT NON-RATED WALL ASSEMBLY.

3 AP536 Typical Ext HM Door Jamb Detail at SP2
Scale: 3" = 1'-0"

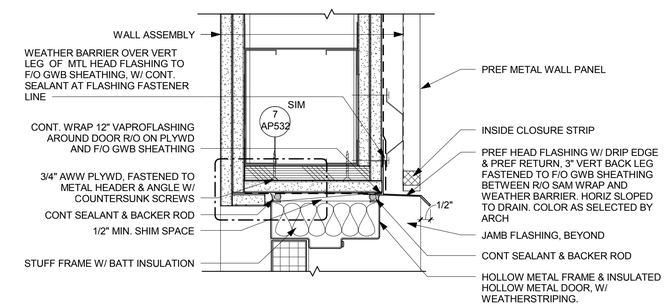

NOTE: DETAIL SIMILAR AT NON-RATED WALL ASSEMBLY.

2 AP536 Typical Ext HM Door Head Detail at SP2
Scale: 3" = 1'-0"

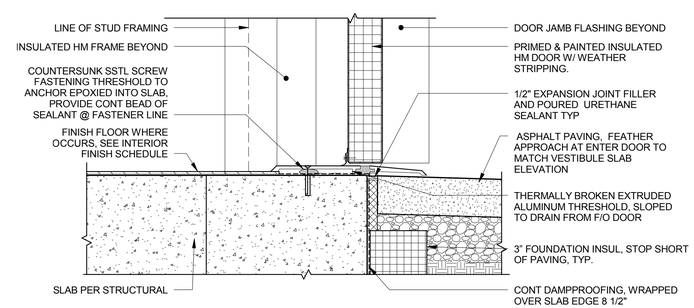

1 AP536 Ext HM Door Sill Detail at Door SP2-P0a
Scale: 3" = 1'-0"

RECORD DRAWINGS

AS BUILT DRAWING

THIS DRAWING HAS BEEN PREPARED FROM CONTRACTOR FURNISHED INFORMATION. KUMIN ASSOCIATES, INC. MAKES NO WARRANTY, EXPRESSED OR IMPLIED, WITH REGARD TO THE ACCURACY OR COMPLETENESS OF THE INFORMATION NOW RECORDED IN THIS DRAWING. KUMIN ASSOCIATES, INC. WILL NOT ASSUME ANY LIABILITY, PROFESSIONAL OBLIGATION OR RISK THAT MIGHT OCCUR DUE TO THE RE-USE OF THIS INFORMATION.

KUMIN
ARCHITECTURE INTERIORS PLANNING
4000 CROSSWIND DRIVE, SUITE 200
ANCHORAGE, AK 99503
907-272-5863 CA LICENSE: AC-25231

NEESE BUILDING CONSTRUCTION, INC.

Childrens Dental Clinic Building

4441 Diplomacy Drive, Anchorage AK 99508

Southcentral Foundation

No.	Description	Date

Drawn By: JLL
Checked By: JS
Date: 24 DEC 2018
Phase: RECORD DRAWINGS
Job No: 21519.00
SHEET TITLE: Exterior Opening Details

SHEET NO:

AP536

1/4/2019 2:14:30 AM

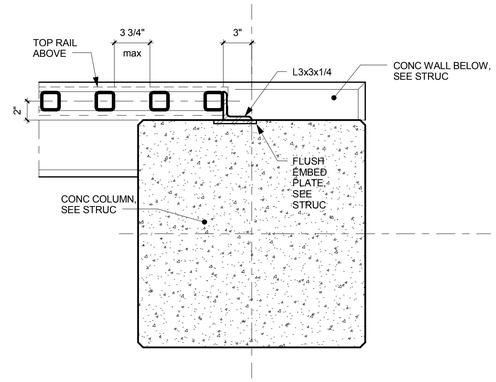

9 PG - Guardrail @ FDN Wall PL/P2
1 1/2" = 1'-0"

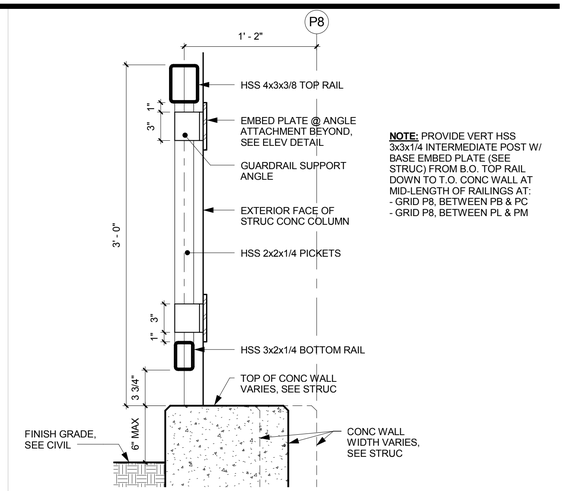

NOTE: PROVIDE VERT HSS 3x3x1/4 INTERMEDIATE POST W/ BASE EMBED PLATE (SEE STRUC) FROM B.O. TOP RAIL DOWN TO T.O. CONC WALL AT MID-LENGTH OF RAILINGS AT:
- GRID P8, BETWEEN PB & PC
- GRID P8, BETWEEN PL & PM

3 PG - Guardrail Section
1 1/2" = 1'-0"

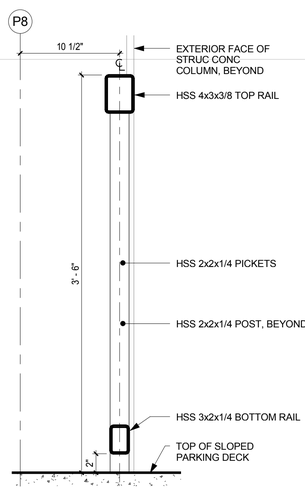

8 Guardrail Section Along Grid P8 Levels P1-N - P5-N
1 1/2" = 1'-0"

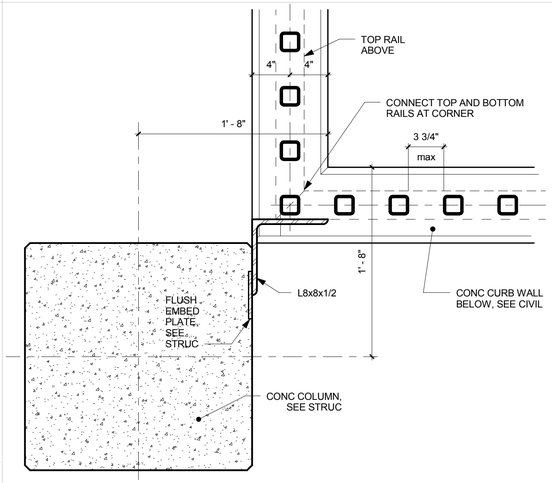

5 PG - Guardrail @ Curb Wall Inside Corner
1 1/2" = 1'-0"

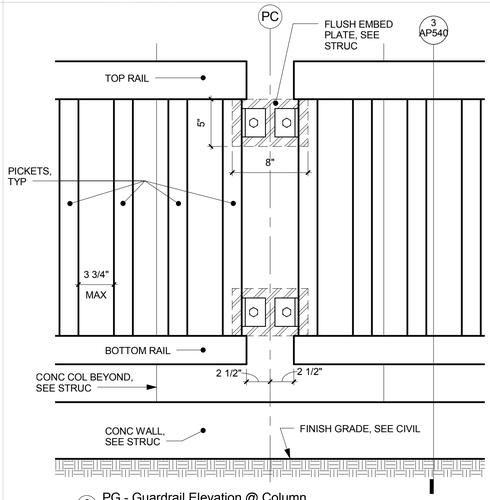

2 PG - Guardrail Elevation @ Column
1 1/2" = 1'-0"

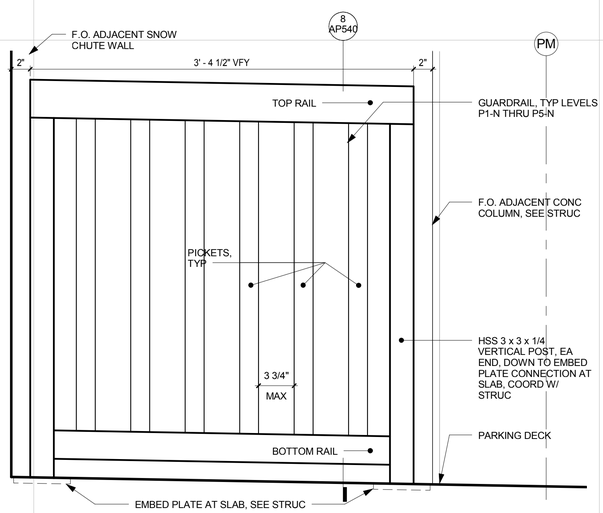

7 Guardrail Elevation Along Grid P8 Levels P1-N - P5-N
1 1/2" = 1'-0"

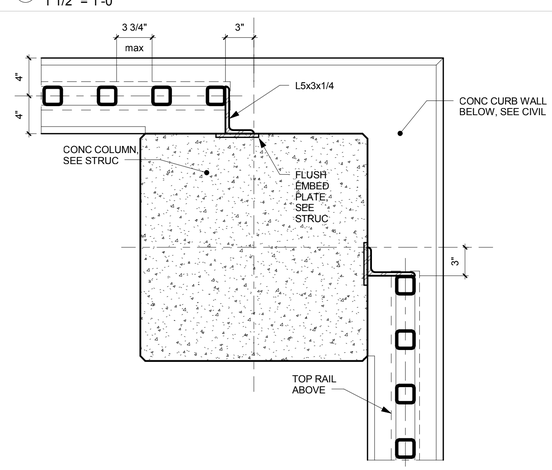

4 PG - Guardrail @ Curb Wall
1 1/2" = 1'-0"

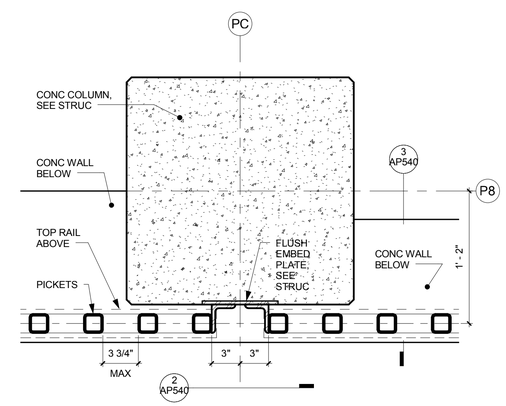

1 PG - Guardrail @ Column
1 1/2" = 1'-0"

RECORD DRAWINGS

AS BUILT DRAWING

THIS DRAWING HAS BEEN PREPARED FROM CONTRACTOR FURNISHED INFORMATION. KUMIN ASSOCIATES, INC. MAKES NO WARRANTY, EXPRESSED OR IMPLIED, WITH REGARD TO THE ACCURACY OR COMPLETENESS OF THE INFORMATION NOW RECORDED IN THIS DRAWING. KUMIN ASSOCIATES, INC. WILL NOT ASSUME ANY LIABILITY, PROFESSIONAL OBLIGATION OR RISK THAT MIGHT OCCUR DUE TO THE RE-USE OF THIS INFORMATION.

KUMIN
ARCHITECTURE INTERIORS PLANNING
9101 JEWELL DRIVE, ANCHORAGE, ALASKA
907-272-5863 FEIN
CA LICENSE: AC-22231

NEESE CONSTRUCTION, INC.

Childrens Dental Clinic Building

4441 Diplomacy Drive, Anchorage AK 99508

Southcentral Foundation

No.	Description	Date

Drawn By: MG,SS
Checked By: JS
Date: 24 DEC 2018
Phase: RECORD DRAWINGS
Job No: 21519.00
SHEET TITLE: Exterior Railing Details

SHEET NO:

AP540

1/4/2019 2:14:24 AM

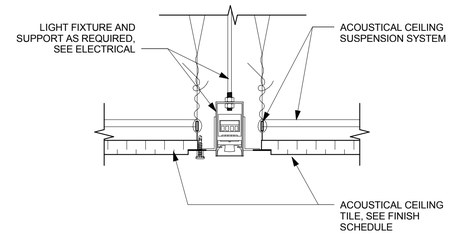

6 / AP550 PG - Light Fixture in Phenolic Laminate Panel Ceiling
Scale: 3" = 1'-0"

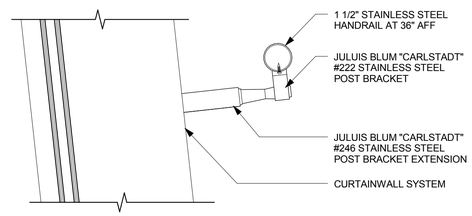

9 / AP550 Skybridge Curtainwall Railing Detail
Scale: 3" = 1'-0"

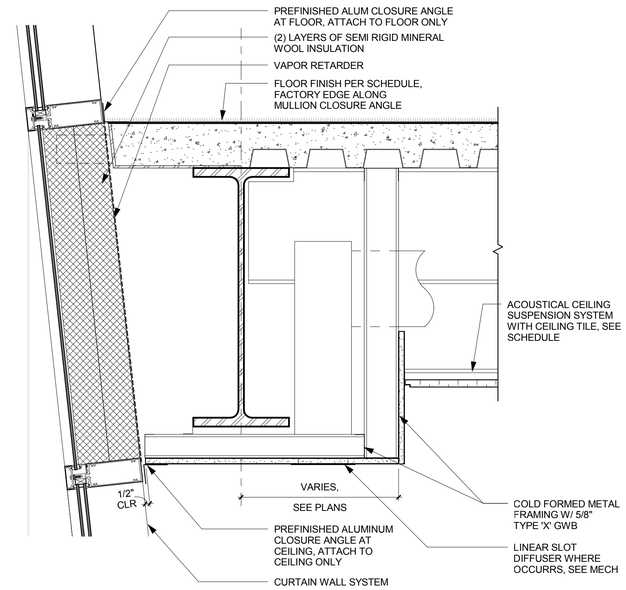

2 / AP550 Skybridge Interior Soffit at Curtainwall - Level 4 & 5
Scale: 1 1/2" = 1'-0"

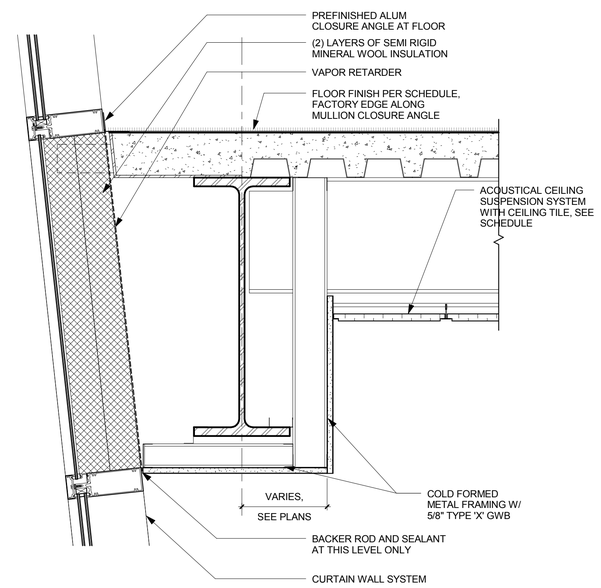

1 / AP550 Skybridge Interior Soffit at Curtainwall - Level 3
Scale: 1 1/2" = 1'-0"

RECORD DRAWINGS

AS BUILT DRAWING

THIS DRAWING HAS BEEN PREPARED FROM CONTRACTOR FURNISHED INFORMATION. KUMIN ASSOCIATES, INC. MAKES NO WARRANTY, EXPRESSED OR IMPLIED, WITH REGARD TO THE ACCURACY OR COMPLETENESS OF THE INFORMATION NOW RECORDED IN THIS DRAWING. KUMIN ASSOCIATES, INC. WILL NOT ASSUME ANY LIABILITY, PROFESSIONAL OBLIGATION OR RISK THAT MIGHT OCCUR DUE TO THE RE-USE OF THIS INFORMATION.

KUMIN
ARCHITECTURE INTERIORS PLANNING
9101 JEWEL LAKE ROAD, SUITE 300
ANCHORAGE, AK 99502
907.272.5863 CA LICENSE: AC25231

NEESE CONSTRUCTION, INC.

Childrens Dental Clinic Building

4441 Diplomacy Drive, Anchorage AK 99508
Southcentral Foundation

No.	Description	Date

Drawn By: JL, SS
Checked By: JS
Date: 24 DEC 2018
Phase: RECORD DRAWINGS
Job No: 21519.00
SHEET TITLE: Interior Details

SHEET NO:
AP550

14/2019 2:14:35 AM

FINISH SCHEDULE - Parking Structure

ROOM NUMBER	ROOM NAME	FLOOR	BASE	WALLS				WAINSCOT		CASEWORK					ACCESSORIES	CEILING	REMARKS	ROOM NUMBER
				NORTH	EAST	SOUTH	WEST	MATERIAL	HEIGHT	LOWER	UPPER	FULL HEIGHT	MISC	COUNTERS				
Pkng P0																		
P010	GENERATOR	SEALED CONC.	--	PNT-2	PNT-2	PNT-2	PNT-2	--								PNT-2		P010
P011	ELEC / COMM	SEALED CONC.	--	PNT-2	PNT-2	PNT-2	PNT-2	--								PNT-2		P011
P012	TRAILS STG	--	--	--	--	--	--	--										P012
P013	DELIVERY ALLEY	--	--	--	SSMP	SSMP	SSMP	--								--	10	P013
P020	L3-5 STORAGE	SEALED CONC.	RB-2	PNT-1	PNT-1	PNT-1	PNT-1	--								PNT-2	1, 2	P020
P050	ELEC	SEALED CONC.	--	PNT-2	PNT-2	PNT-2	PNT-2	--										P050
SP1-P0	STAIR P1	WOM-1/RST-1	RB-2	PNT-1	PNT-1	PNT-1	PNT-1	--								ACP-1/PNT-1, 5	1, 2, 7, 9	SP1-P0
SP2-P0	STAIR P2	SEALED CONC.	RB-2	PNT-1	PNT-1	PNT-1	PNT-1	--								PNT-2	1, 2, 8	SP2-P0
Pkng P1																		
EP1A-P1	ELEV P1A	WOM-1	FCTY	FCTY	FCTY	FCTY	FCTY	--								FCTY		EP1A-P1
EP1B-P1	ELEV P1B	WOM-1	FCTY	FCTY	FCTY	FCTY	FCTY	--								FCTY		EP1B-P1
P110	BIKE CAGE	--	--	--	--	--	--	--										P110
SP1-P1	STAIR P1	WOM-1/RST-1	RB-2	PNT-1, 5	PNT-1, 5	PNT-1, 3	PNT-1, 3	IRP-3	3'-0"				SSM-2			ACP-1/PNT-1, 5	1, 2, 4, 6, 7, 9	SP1-P1
SP2-P1	STAIR P2	SEALED CONC.	RB-2	PNT-1	PNT-1	PNT-1	PNT-1	--								PNT-2	1, 2, 8	SP2-P1
Pkng P2																		
SP1-P2	STAIR P1	WOM-1/RST-1	RB-2	PNT-1, 5	PNT-4, 5	PNT-1	PNT-3	--					SSM-2			ACP-1/PNT-1, 5	1, 2, 4, 6, 7, 9	SP1-P2
SP2-P2	STAIR P2	SEALED CONC.	RB-2	PNT-1	PNT-1	PNT-1	PNT-1	--								PNT-2	1, 2, 8	SP2-P2
Pkng P3																		
SP1-P3	STAIR P1	WOM-1/RST-1	RB-2	PNT-1, 5	PNT-4, 5	PNT-1	PNT-3	--					SSM-2			ACP-1/PNT-1, 5	1, 2, 4, 6, 7, 9	SP1-P3
SP2-P3	STAIR P2	SEALED CONC.	RB-2	PNT-1	PNT-1	PNT-1	PNT-1	--								PNT-2	1, 2, 8	SP2-P3
Pkng P4																		
P4-V1	VEST.	WOM-1	RB-1	PNT-3	PNT-1, 5	PNT-1, 5	PNT-1, 5	IRP-3	SEE ELEVS				SSM-2			PNT-2	1, 2, 3, 4	P4-V1
SP1-P4	STAIR P1	WOM-1/RST-1	RB-2	PNT-1, 5	PNT-4, 5	PNT-1	PNT-3	--					SSM-2			ACP-1/PNT-1, 5	1, 2, 4, 6, 7, 9	SP1-P4
SP2-P4	STAIR P2	SEALED CONC.	RB-2	PNT-1	PNT-1	PNT-1	PNT-1	--								PNT-2	1, 2, 8	SP2-P4
Pkng P5																		
P5-V1	VEST.	WOM-1	RB-1	PNT-3	PNT-1	PNT-1	PNT-1	IRP-3	SEE ELEVS				SSM-2			PNT-2	1, 2, 3, 4	P5-V1
SP1-P5	STAIR P1	WOM-1/RST-1	RB-2	PNT-1, 5	PNT-4, 5	PNT-1	PNT-3	--					SSM-2			ACP-1/PNT-1, 5	1, 2, 4, 6, 7, 9	SP1-P5
SP2-P5	STAIR P2	SEALED CONC.	RB-2	PNT-1	PNT-1	PNT-1	PNT-1	--								PNT-2	1, 2, 8	SP2-P5
Pkng P6																		
P6-V1	VEST.	WOM-1	RB-1	PNT-3	PNT-1	PNT-1	PNT-1	IRP-3	SEE ELEVS				SSM-2			PNT-2	1, 2, 3, 4	P6-V1
SP1-P6	STAIR P1	WOM-1/RST-1	RB-2	PNT-1, 5	PNT-4, 5	PNT-1	PNT-3	--					SSM-2			ACP-1/PNT-1, 5	1, 2, 4, 6, 7, 9	SP1-P6
SP2-P6	STAIR P2	SEALED CONC.	RB-2	PNT-1	PNT-1	PNT-1	PNT-1	--								PNT-2	1, 2, 8	SP2-P6
Pkng P7																		
SP1-P7	STAIR P1	WOM-1/RST-1	RB-2	PNT-1, 5	PNT-4, 5	PNT-1	PNT-3	--								ACP-1/PNT-1, 5	1, 2, 6, 7, 9	SP1-P7

FINISH SCHEDULE - Skybridge

ROOM NUMBER	ROOM NAME	FLOOR	BASE	WALLS				WAINSCOT		CASEWORK					ACCESSORIES	CEILING	REMARKS	ROOM NUMBER
				NORTH	EAST	SOUTH	WEST	MATERIAL	HEIGHT	LOWER	UPPER	FULL HEIGHT	MISC	COUNTERS				
B1-L3	SKYBRIDGE	CPT-2,3	RB-1	PNT-1, 5	PNT-1, 5	PNT-1, 5	PNT-1, 5	--					SSM-2			ACP-1/PNT-1	1, 2, 5, 6, 7, 9	B1-L3
B1-L4	SKYBRIDGE	CPT-2,3	RB-1	PNT-1, 5	PNT-1, 5	PNT-1, 5	PNT-1, 5	--								ACP-1/PNT-1	1, 2, 6, 7, 9	B1-L4
B1-L5	SKYBRIDGE	CPT-2,3	RB-1	PNT-1, 5	PNT-1, 5	PNT-1, 5	PNT-1, 5	--								ACP-1/PNT-1	1, 2, 6, 7, 9	B1-L5

FINISH SCHEDULE NOTES AND REMARKS

GENERAL NOTES

A. SEE VOLUME 1, SHEET A600 FOR FINISH MATERIAL LEGEND
B. SEE DOOR SCHEDULE FOR FINISHES AND COLORS OF ALL DOORS AND FRAMES
C. DO NOT PAINT WINDOW, STOREFRONT OR CURTAINWALL FRAMES OR ELEVATOR FACTORY-FINISHED ENTRANCES, UNO
D. DO NOT PAINT FACTORY FINISHED SURFACES OR ITEMS, UNO
E. RB-X SHALL BE INSTALLED SUCH THAT BUTT JOINTS DO NOT OCCUR ANY CLOSER THAN 6" FROM OUTSIDE CORNERS, TYP

REMARKS

1. PAINT ALL EXPOSED STRUCTURE, CONDUITS, AND OTHER UNFINISHED ITEMS THROUGHOUT, UNO. COLOR TO MATCH ADJACENT WALL OR CEILING SURFACE, TYP
2. PROVIDE CORNERGUARDS ON ALL OUTSIDE CORNERS. WHERE WAINSCOT IS PROVIDED, CORNERGUARDS SHALL EXTEND FROM TOP OF WALL BASE TO TOP OF WAINSCOT, UNO. WHERE NO WAINSCOT IS PROVIDED, CORNERGUARDS SHALL EXTENT FROM TOP OF WALL BASE TO 36" ABOVE BASE, UNO
3. WHERE WAINSCOT OCCURS ALONG WALL WITH SLOPING BASE: CUT WAINSCOT BOTTOM EDGE TO FOLLOW SLOPE, WITH 1" LAP BEHIND TOP OF BASE, AND FACTORY STRAIGHT EDGE ALONG TOP AND NOT SLOPING
4. SSM-2 WINDOWSILLS
5. SSM-2 CAP AT TOP OF PARTIAL-HEIGHT WALL
6. SEE CEILING DETAILS FOR JOINT CONDITIONS AT PLP
7. PNT-X INDICATED AT CEILINGS APPLIES TO GWB EXPOSED SURFACES, UNO
8. PROVIDE 1" WIDE SANDED PAINT STRIPE, IN SAFETY YELLOW COLOR, FULL WIDTH OF TREAD AT ALL STAIR NOSINGS INCLUDING TOP NOSING AT MAIN FLOOR LANDINGS, TYP
9. PAINT METAL RAILINGS AND STAIRS PNT-5 FOR ITEMS INDICATED TO RECEIVE PNT FINISH, SEE DETAILS AND SPECIFICATIONS, EXCEPT HANDRAILS WHICH SHALL BE PNT-5
10. PROVIDE SINGLE SKIN METAL PANELS AS WALL FINISH IN THE DELIVERY AREA IDENTIFIED AS SSMP WITH A FINISH COLOR OF WHITE.

AS BUILT DRAWING
THIS DRAWING HAS BEEN PREPARED FROM CONTRACTOR FURNISHED INFORMATION. KUMIN ASSOCIATES, INC. MAKES NO WARRANTY, EXPRESSED OR IMPLIED, WITH REGARD TO THE ACCURACY OR COMPLETENESS OF THE INFORMATION NOW RECORDED IN THIS DRAWING. KUMIN ASSOCIATES, INC. WILL NOT ASSUME ANY LIABILITY, PROFESSIONAL OBLIGATION OR RISK THAT MIGHT OCCUR DUE TO THE RE-USE OF THIS INFORMATION.

KUMIN
ARCHITECTURE INTERIORS PLANNING
9101 JEWEL LAKE ROAD, SUITE 200
ANCHORAGE, AK 99502
(907) 272-5863
CA LICENSE: AC-25231
NEESE CONSTRUCTION, INC.

Childrens Dental Clinic Building

4441 Diplomacy Drive, Anchorage AK 99508

Southcentral Foundation

No.	Description	Date

Drawn By: SS
Checked By: JS
Date: 24 DEC 2018
Phase: RECORD DRAWINGS
Job No: 21519.00
SHEET TITLE: Finish Schedule
SHEET NO: AP601

1/4/2019 2:16:13 AM

RECORD DRAWINGS

DOOR SCHEDULE - Parking Structure & Skybridge

DOOR #	FROM ROOM	TO ROOM	DOOR SIZE WIDTH	DOOR SIZE HEIGHT	DOOR SIZE THICKNESS	DOOR TYPE	DOOR MATERIAL	DOOR FINISH	DOOR COLOR	FRAME TYPE	FRAME MATERIAL	FRAME FINISH	FRAME COLOR	GLASS TYPE	FIRE RATING	HARDWARE	NOTE	DOOR #
Pkng P0																		
EP1A-P0	STAIR P1	ELEV P1A	3' - 6"	7' - 0"										--				EP1A-P0
EP1B-P0	ELEV P1B	STAIR P1	3' - 6"	7' - 0"										--				EP1B-P0
P050	ELEC	STAIR P1	3' - 0"	7' - 0"	1 3/4"	PA	HM	PT	PNT-1	P1	HM	PT	PNT-1	--		LOCKING		P050
SP1-P0	STAIR P1		3' - 0"	7' - 0"	1 3/4"	PB	IHM	PT	EPNT-1/PNT-1	P1	IHM	PT	EPNT-1/PNT-1	IG-7		EXIT		SP1-P0
Pkng P0-N																		
SP2-P0a		STAIR P2	3' - 0"	7' - 0"	1 3/4"	PE	HM	PT	EPNT-1/PNT-1	P1	HM	PT	EPNT-1/PNT-1	G-23	90 MIN	EXIT		SP2-P0a
SP2-P0b		STAIR P2	3' - 0"	7' - 0"	1 3/4"	PB	HM	PT	EPNT-1/PNT-1	P6	HM	PT	EPNT-1/PNT-1	G-21		EXIT		SP2-P0b
Pkng P1																		
CP1-P1	SNOW CHUTE P1		13' - 8"	11' - 6"		PC	ALUM	PREF		FCTY	ALUM	PREF		--		LOCKING	7,12	CP1-P1
CP2-P1	SNOW CHUTE P2		12' - 3"	11' - 6"		PC	ALUM	PREF		FCTY	ALUM	PREF		--		LOCKING	7,12	CP2-P1
EP1A-P1	STAIR P1	ELEV P1A	3' - 6"	7' - 0"										--				EP1A-P1
EP1B-P1	ELEV P1B	STAIR P1	3' - 6"	7' - 0"										--				EP1B-P1
P110	BIKE CAGE		3' - 6"	7' - 0"	1"	PH	CHL			P3				--		CR		P110
P150a	COMPACTOR		12' - 8"	8' - 0"	2"	PH	CHL	GALV		P5	STL	GALV		--		LOCKING	8, 9, 10, 11	P150a
P150b	COMPACTOR		4' - 4"	6' - 8"	1 3/4"	PH	CHL	GALV		P4	STL	GALV		--		LOCKING	8, 10	P150b
SP1-P1a		STAIR P1	3' - 0"	7' - 0"	1 3/4"	PF	ALUM	PREF		P2	ALUM	PREF		IG-7		EXIT		SP1-P1a
SP1-P1b		STAIR P1	3' - 0"	7' - 0"	1 3/4"	PF	ALUM	PREF		SFP01	ALUM	PREF		IG-7		EXIT		SP1-P1b
Pkng P1-N																		
SP2-P1		STAIR P2	3' - 0"	7' - 0"	1 3/4"	PE	HM	PT	EPNT-1/PNT-1	P1	HM	PT	EPNT-1/PNT-1	G-23	90 MIN	EXIT		SP2-P1
Pkng P2																		
EP1A-P2	STAIR P1	ELEV P1A	3' - 6"	7' - 0"										--				EP1A-P2
EP1B-P2	ELEV P1B	STAIR P1	3' - 6"	7' - 0"										--				EP1B-P2
SP1-P2		STAIR P1	3' - 0"	7' - 0"	1 3/4"	PF	ALUM	PREF		P2	ALUM	PREF		IG-7		EXIT		SP1-P2
Pkng P2-N																		
SP2-P2		STAIR P2	3' - 0"	7' - 0"	1 3/4"	PE	HM	PT	EPNT-1/PNT-1	P1	HM	PT	EPNT-1/PNT-1	G-23	90 MIN	EXIT		SP2-P2
Pkng P3																		
EP1A-P3	STAIR P1	ELEV P1A	3' - 6"	7' - 0"										--				EP1A-P3
EP1B-P3	ELEV P1B	STAIR P1	3' - 6"	7' - 0"										--				EP1B-P3
SP1-P3		STAIR P1	3' - 0"	7' - 0"	1 3/4"	PF	ALUM	PREF		P2	ALUM	PREF		IG-7		EXIT		SP1-P3
Pkng P3-N																		
SP2-P3		STAIR P2	3' - 0"	7' - 0"	1 3/4"	PE	HM	PT	EPNT-1/PNT-1	P1	HM	PT	EPNT-1/PNT-1	G-23	90 MIN	EXIT		SP2-P3
Pkng P4																		
B1-L3b	SKYBRIDGE		3' - 6"	3' - 6"	1 3/4"	MFR	MFR	PREF		MFR	ALUM	PREF		G-21			5	B1-L3b
EP1A-P4	STAIR P1	ELEV P1A	3' - 6"	7' - 0"										--				EP1A-P4
EP1B-P4	ELEV P1B	STAIR P1	3' - 6"	7' - 0"										--				EP1B-P4
P4-V1a	VEST.		3' - 6 3/4"	7' - 0"	1 3/4"	PF	ALUM	PREF		SFP02	ALUM	PREF		IG-7		AO/CR, EXIT	4, 6	P4-V1a
P4-V1b		VEST.	3' - 6"	7' - 0"	1 3/4"	PF	ALUM	PREF		SFP20	ALUM	PREF		G-21		AO, EXIT	4	P4-V1b
SP1-P4		STAIR P1	3' - 0"	7' - 0"	1 3/4"	PF	ALUM	PREF		P2	ALUM	PREF		IG-7		EXIT		SP1-P4
Pkng P4-N																		
SP2-P4		STAIR P2	3' - 0"	7' - 0"	1 3/4"	PE	HM	PT	EPNT-1/PNT-1	P1	HM	PT	EPNT-1/PNT-1	G-23	90 MIN	EXIT		SP2-P4
Pkng P5																		
EP1A-P5	STAIR P1	ELEV P1A	3' - 6"	7' - 0"										--				EP1A-P5
EP1B-P5	ELEV P1B	STAIR P1	3' - 6"	7' - 0"										--				EP1B-P5
P5-V1a	VEST.		3' - 6 1/4"	7' - 0"	1 3/4"	PF	ALUM	PREF		SFP02	ALUM	PREF		IG-7		AO/CR, EXIT	4, 6	P5-V1a
P5-V1b	VEST.	SKYBRIDGE	3' - 6"	7' - 0"	1 3/4"	PF	ALUM	PREF		SFP21	ALUM	PREF		G-21		AO, EXIT	4	P5-V1b
SP1-P5		STAIR P1	3' - 0"	7' - 0"	1 3/4"	PF	ALUM	PREF		P2	ALUM	PREF		IG-7		EXIT		SP1-P5
Pkng P5-N																		
SP2-P5		STAIR P2	3' - 0"	7' - 0"	1 3/4"	PE	HM	PT	EPNT-1/PNT-1	P1	HM	PT	EPNT-1/PNT-1	G-23	90 MIN	EXIT		SP2-P5
Pkng P6																		
EP1A-P6	STAIR P1	ELEV P1A	3' - 6"	7' - 0"										--				EP1A-P6
EP1B-P6	ELEV P1B	STAIR P1	3' - 6"	7' - 0"										--				EP1B-P6
P6-V1a	VEST.		3' - 6 3/4"	7' - 0 3/4"	1 3/4"	PF	ALUM	PREF		SFP02	ALUM	PREF		IG-7		AO/CR, EXIT	4, 6	P6-V1a
P6-V1b	VEST.	SKYBRIDGE	3' - 6"	7' - 0"	1 3/4"	PF	ALUM	PREF		SFP21	ALUM	PREF		G-21		AO, EXIT	4	P6-V1b
SP1-P6		STAIR P1	3' - 0"	7' - 0"	1 3/4"	PF	ALUM	PREF		P2	ALUM	PREF		IG-7		EXIT		SP1-P6
LEVEL 5																		
B1-L5	HALL	SKYBRIDGE	6' - 0"	8' - 0"	1 3/4"	PF	ALUM	PREF		SFP24	ALUM	PREF		G-24	SMOKE	MHO, EXIT	1, 2, 3	B1-L5
Pkng P6-N																		
SP2-P6		STAIR P2	3' - 0"	7' - 0"	1 3/4"		HM	PT	EPNT-1/PNT-1	P1	HM	PT	EPNT-1/PNT-1	G-23	90 MIN	EXIT		SP2-P6
Pkng P7																		
EP1A-P7	STAIR P1	ELEV P1A	3' - 6"	7' - 0"										--				EP1A-P7
EP1B-P7	ELEV P1B	STAIR P1	3' - 6"	7' - 0"										--				EP1B-P7
SP1-P7		STAIR P1	3' - 0"	7' - 0"	1 3/4"	PF	ALUM	PREF		P2	ALUM	PREF		IG-7		EXIT		SP1-P7

Grand total: 47

GENERAL DOOR SCHEDULE NOTES

1. FOR DOOR AND FRAME TYPES SEE SHEET AP651
2. FOR GLASS AND GLAZING TYPES SEE SHEET AP651
3. HARDWARE INDICATES BROAD FUNCTIONAL INTENT ONLY
4. SEE DOOR HARDWARE SPECS FOR COMPLETE HARDWARE GROUP AT EACH DOOR, TYP
5. ALLEY AREA DOORS ARE NOT INCLUDED IN THIS PARKING STRUCTURE PACKAGE. SEE VOLUME 1 FOR THESE DOORS.
6. SKYBRIDGE-TO-BUILDING, DOORS ARE INCLUDED IN THIS PARKING STRUCTURE PACKAGE.
7. DOORS INDICATED WITH "SMOKE" SHALL MEET REQUIREMENTS OF 2012 IBC SECTION 3104.5, EXCEPTION 1

DOOR SCHEDULE NOTES

1. SWING TO 180 DEGRESS
2. MAGNETIC HOLD-OPEN EA LEAF ON SOUTH SIDE, SEE ELEC. PROVIDE FAIL-SAFE AS REQUIRED TO MEET CODE
3. SMOKE SEALS
4. PUSH BUTTON ON MULLION, EACH SIDE
5. FCTY LIFT OPERATOR CONTROLS IN FCTY-PROVIDED GATE FRAME W/ KEYED LOCKOUT
6. DOOR CONTACT
7. DOOR CONTACT CONNECTED TO WARNING LIGHT ABOVE DOOR HEAD, COORD W/ ELEC
8. PROVIDE HEAVY-DUTY HASP WITH PADLOCK
9. PROVIDE HEAVY-DUTY EXTERIOR BOTTOM SLIDE BOLT, EA LEAF
10. PROVIDE VERT VINYL SLATS IN CHAINLINK GATES, COLOR TO BE SELECTED BY ARCHITECT FROM MFR'S STANDARD RANGE
11. PROVIDE SSTL BIRD SPIKES ALONG TOP RAIL OF GATE LEAFS
12. PROVIDE MANUAL CRANK HANDLE AND WALL HNGER WITH LOCK FOR STORAGE

AS BUILT DRAWING

THIS DRAWING HAS BEEN PREPARED FROM CONTRACTOR FURNISHED INFORMATION. KUMIN ASSOCIATES, INC. MAKES NO WARRANTY, EXPRESSED OR IMPLIED, WITH REGARD TO THE ACCURACY OR COMPLETENESS OF THE INFORMATION NOW RECORDED IN THIS DRAWING. KUMIN ASSOCIATES, INC. WILL NOT ASSUME ANY LIABILITY, PROFESSIONAL OBLIGATION OR RISK THAT MIGHT OCCUR DUE TO THE RE-USE OF THIS INFORMATION.

KUMIN
ARCHITECTURE INTERIORS PLANNING
9101 JEWEL LAKE ROAD, SUITE 200
ANCHORAGE, AK 99502
907.272.5863 FAX 272.5201
CA LICENSE: AC-25231

NEESE CONSTRUCTION, INC.

Childrens Dental Clinic Building

4441 Diplomacy Drive, Anchorage AK 99508

Southcentral Foundation

No.	Description	Date

Drawn By: SS
Checked By: JS
Date: 24 DEC 2018
Phase: RECORD DRAWINGS
Job No: 21519.00
SHEET TITLE: Door Schedule
SHEET NO: AP650

1/4/2019 2:16:15 AM

RECORD DRAWINGS

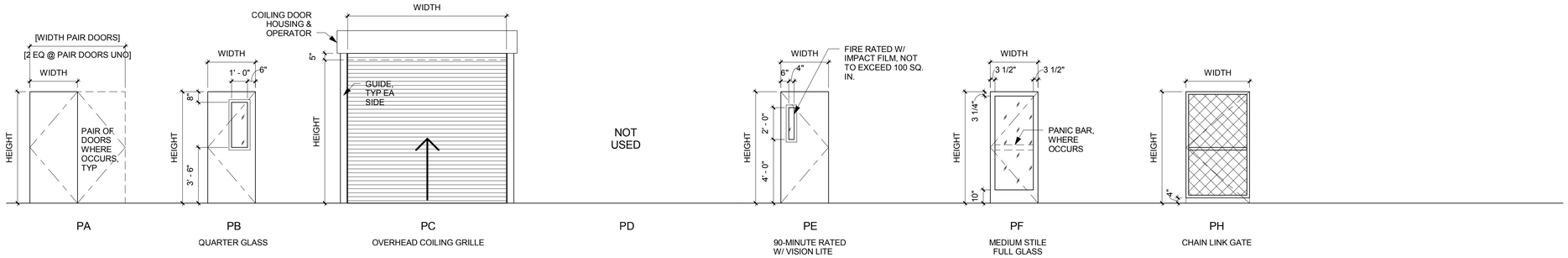

DOOR TYPES - PKNG

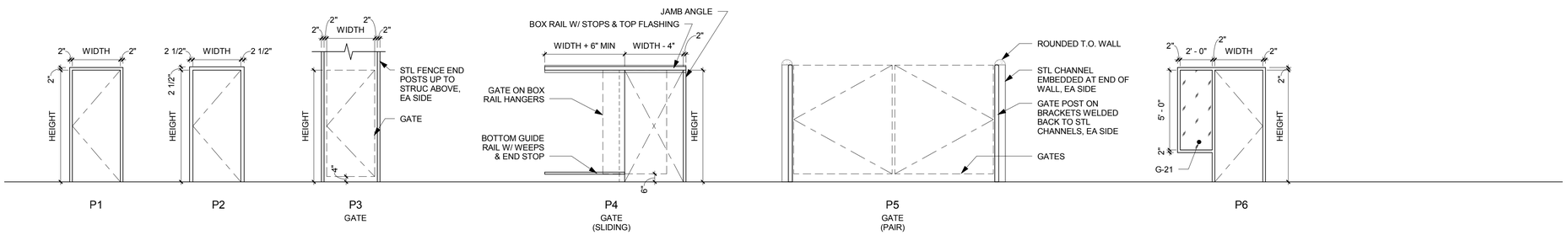

DOOR FRAME TYPES - PKNG

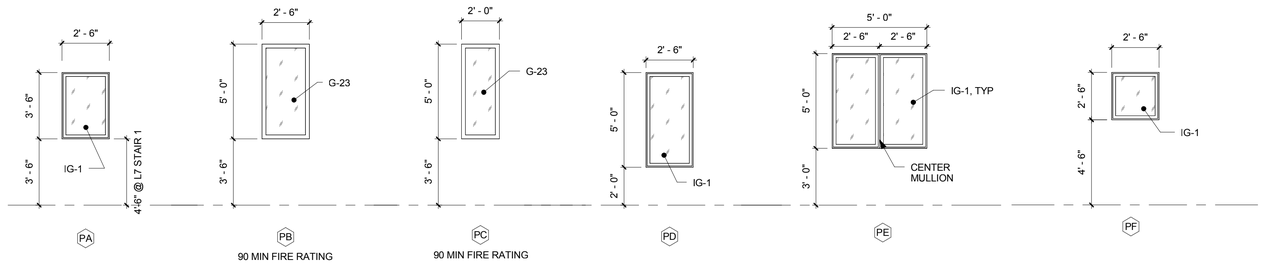

PUNCHED WINDOW TYPES - PKNG

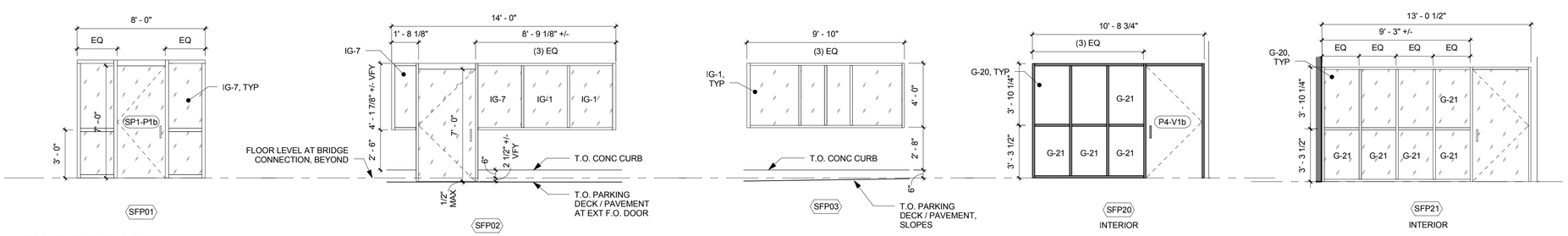

STOREFRONT TYPES - PKNG

GENERAL DOOR & FRAME TYPE NOTES

1. DOOR AND FRAME GLAZING PER SCHEDULE UNO

GENERAL WINDOW, STOREFRONT AND CURTAINWALL NOTES

1. SEE EXTERIOR ELEVATIONS FOR WINDOW TYPE LOCATIONS
2. WHERE MULTIPLE PUNCHED WINDOWS OCCUR DIRECTLY ADJACENT TO EACH OTHER, PROVIDE AS COMBINED UNIT. SEE COMBINED UNITS NOTES AND DETAILS
3. DIMENSIONS SHOWN ARE TO ROUGH OPENINGS AND TO CENTER LINE OF MULLIONS, UNO
4. PROVIDE SAFETY GLAZING WHERE REQUIRED TO MEET IBC SECTION 2406
5. SEE VOLUME 1, SHEET A656 FOR GLASS AND GLAZING TYPES

AS BUILT DRAWING
THIS DRAWING HAS BEEN PREPARED FROM CONTRACTOR FURNISHED INFORMATION. KUMIN ASSOCIATES, INC. MAKES NO WARRANTY, EXPRESSED OR IMPLIED, WITH REGARD TO THE ACCURACY OR COMPLETENESS OF THE INFORMATION NOW RECORDED IN THIS DRAWING. KUMIN ASSOCIATES, INC. WILL NOT ASSUME ANY LIABILITY, PROFESSIONAL OBLIGATION OR RISK THAT MIGHT OCCUR DUE TO THE RE-USE OF THIS INFORMATION.

KUMIN
ARCHITECTURE INTERIORS PLANNING
1400 W BENSON BLVD, SUITE 400
ANCHORAGE, AK 99503
907.272.5863
CA LICENSE: AC-22231
NEESE CONSTRUCTION, INC.

Childrens Dental Clinic Building

4441 Diplomacy Drive, Anchorage AK 99508

Southcentral Foundation

No.	Description	Date

Drawn By: SS
Checked By: JS
Date: 24 DEC 2018
Phase: RECORD DRAWINGS
Job No: 21519.00
SHEET TITLE: Door, Frame & Window Types
SHEET NO: AP651

RECORD DRAWINGS

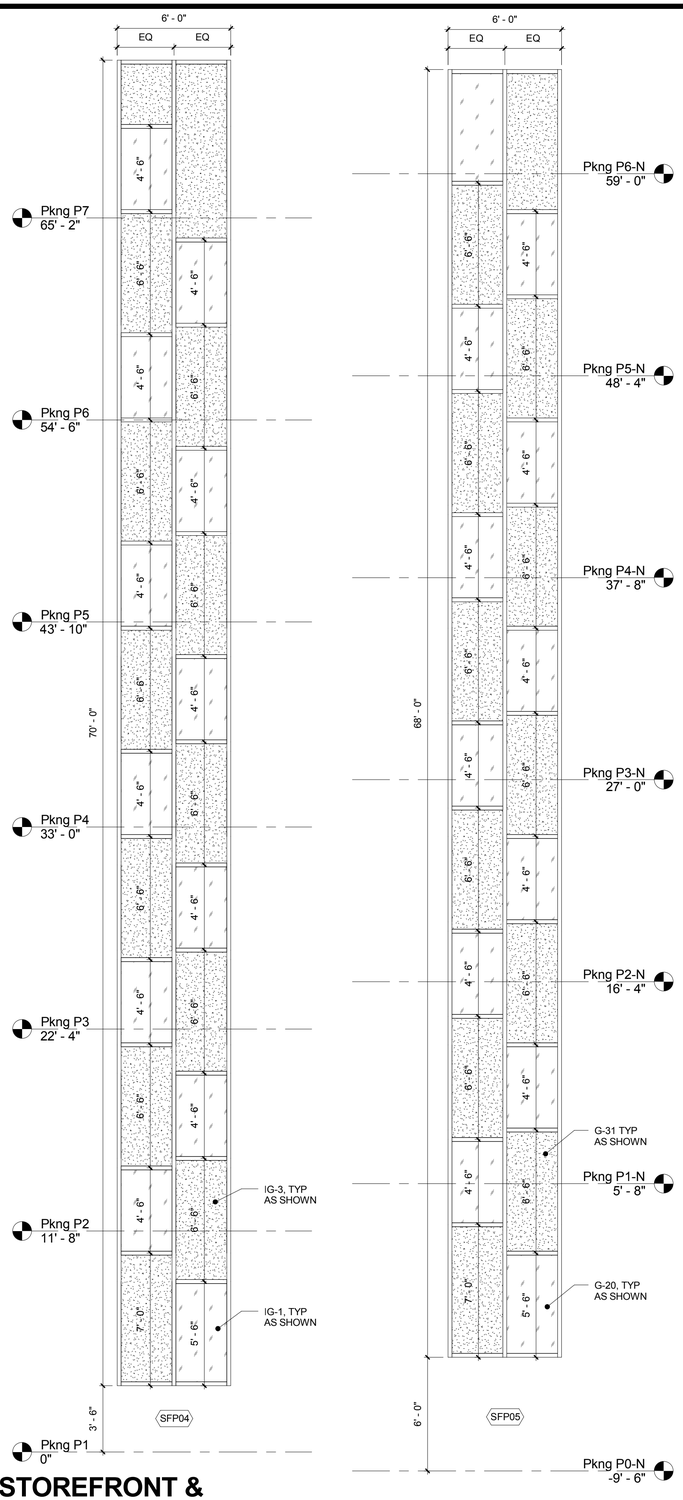

STOREFRONT & CURTAINWALL TYPES - PKNG

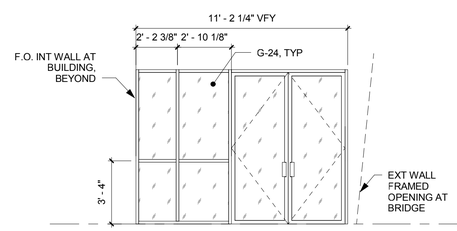

SFP22
INTERIOR
SMOKE RATED

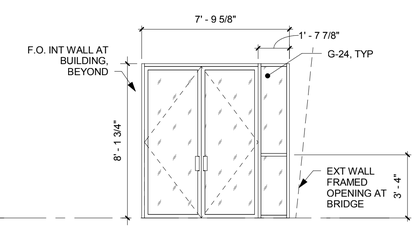

SFP23
INTERIOR
SMOKE RATED

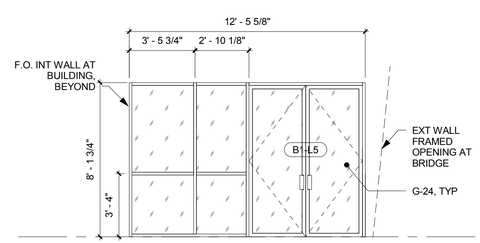

SFP24
INTERIOR
SMOKE RATED

AS BUILT DRAWING

THIS DRAWING HAS BEEN PREPARED FROM CONTRACTOR FURNISHED INFORMATION. KUMIN ASSOCIATES, INC. MAKES NO WARRANTY, EXPRESSED OR IMPLIED, WITH REGARD TO THE ACCURACY OR COMPLETENESS OF THE INFORMATION NOW RECORDED IN THIS DRAWING. KUMIN ASSOCIATES, INC. WILL NOT ASSUME ANY LIABILITY, PROFESSIONAL OBLIGATION OR RISK THAT MIGHT OCCUR DUE TO THE RE-USE OF THIS INFORMATION.

KUMIN
ARCHITECTURE INTERIORS PLANNING
9101 JEWEL LAKE ROAD
ANCHORAGE, AK 99502
907-272-5863 FAX 272-5301
CA LICENSE: AC-22231

NEESE CONSTRUCTION, INC.

Childrens Dental Clinic Building

4441 Diplomacy Drive, Anchorage AK 99508

Southcentral Foundation

No.	Description	Date

Drawn By: SS
Checked By: JS
Date: 24 DEC 2018
Phase: RECORD DRAWINGS
Job No: 21519.00
SHEET TITLE: Window Types
SHEET NO: AP652

04/2019 2:16:25 AM

RECORD DRAWINGS

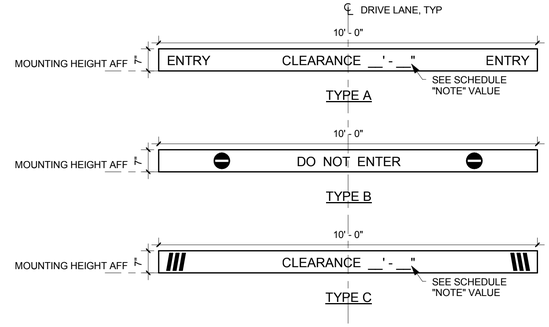

4 AP700 Signage - Height Warning Bar
Scale: 1/2" = 1'-0"

"HEADACHE BAR" SCHEDULE			
MARK	TYPE	MNTG HT	NOTE
1	A	11'-6"	11'-6"
2	B	11'-6"	
3	C/B	8'-0"	8'-0"
4	B	8'-0"	
5	C/B	7'-4"	7'-4"
6	B	7'-4"	
7	A/B	7'-4"	7'-4"
8	B	7'-4"	

NOTES:
1. WHERE ONLY ONE TYPE IS INDICATED, ONE SIDE IS TO BE LEFT BLANK
2. WHERE TYPE A OR C OCCURS, THAT SIDE SHALL FACE APPROACH TOWARD LOWER CLEARANCE AREA
3. PROVIDE MOUNTING HARDWARE TO DECK OR BEAM ABOVE INCLUDING SUSPENSION CABLES

GENERAL STRIPING & SIGNAGE NOTES

1. WAYFINDING SIGNAGE IS GENERALLY NOT INCLUDED IN THIS PACKAGE
2. SEE CIVIL FOR ALL STRIPING AND SIGNAGE BEYOND LIMITS OF PARKING STRUCTURE, TYP
3. ALL STRIPING SHALL BE PROVIDED TO MEET MUNICIPALITY OF ANCHORAGE REQUIREMENTS
4. ALL COLORS FOR STRIPING & SIGNAGE SHALL MEET MUTCD COLOR SPECIFICATIONS PANTONE DESIGNATIONS, UNO
5. DEPICTION OF SIGNS MAY NOT ACCURATELY REFLECT MUTCD DESIGNS AND SHALL BE CONSIDERED APPROXIMATE FOR REFERENCE
6. SIGN TYPE NUMBER "10" AND ABOVE ARE NOT MUTCD SIGNS. THESE SIGNS SHALL BE PROVIDED AS DETAILED, TYP
7. ALL SIGNAGE AND STRIPING SHALL BE PROVIDED TO MEET:

- 2009 MANUAL ON UNIFORM TRAFFIC CONTROL DEVICES (MUTCD), INCLUDING 2012 SUPPLEMENT
- ALASKA SIGN DESIGN SPECIFICATIONS (ASDS), CURRENT AS OF 1/29/15
- ADA ACCESSIBILITY GUIDELINES 2010
- ICC/ANSI A117.1-2009

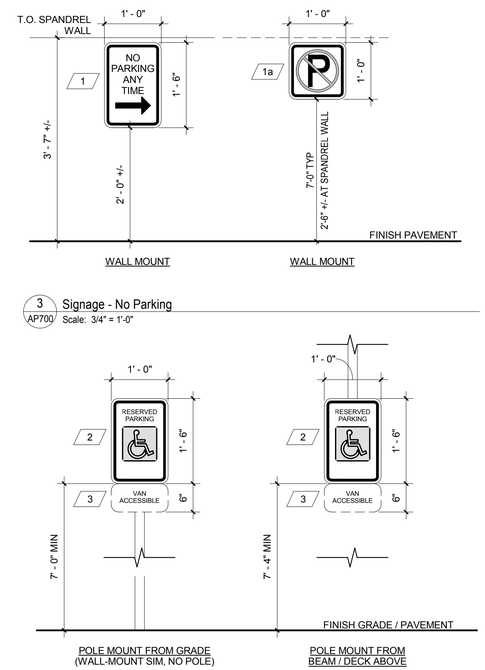

3 AP700 Signage - No Parking
Scale: 3/4" = 1'-0"

NOTE: CENTER SIGN ON PARKING STALL WHERE OCCURS BEHIND GARAGE CLADDING PANEL; WHERE CENTER OF STALL OCCURS BETWEEN GARAGE CLADDING PANELS, OFFSET SIGN TO BE ENTIRELY BEHIND CLADDING PANEL AND AS CLOSE TO CENTER OF STALL AS POSSIBLE, TYP

2 AP700 Signage - Accessible Parking
Scale: 3/4" = 1'-0"

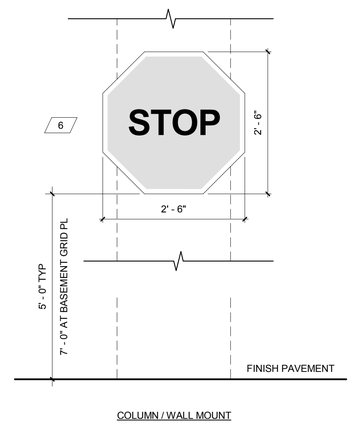

6 AP700 Signage - Stop Sign
Scale: 3/4" = 1'-0"

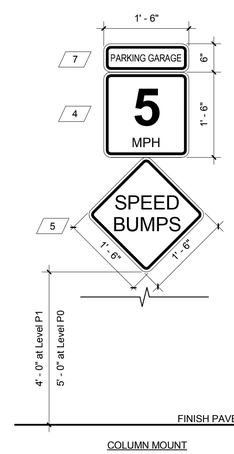

5 AP700 Signage - Speed Limit & Bumps Signs
Scale: 3/4" = 1'-0"

MUTCD STANDARD SIGNS SCHEDULE			
MARK	MUTCD	SIZE (H x W)	NOTE
1	R7-1	18" x 12"	NO PARKING ANY TIME (RIGHT ARROW)
1a	R8-3	12" x 12"	No Parking Symbol
2	R7-8	18" x 12"	ACCESSIBLE
3	R7-8A	6" x 12"	VAN ACCESSIBLE
4	W13-1P	18" x 18"	5 MPH
5	W17-1	18" x 18"	SPEED BUMPS
6	R1-1	30" x 30"	STOP
7	SIM TO R2-5aP	6" x 18"	PARKING GARAGE

NOTES:
1. SIGN TYPE NUMBER "10" AND ABOVE ARE NOT MUTCD SIGNS. THESE SIGNS SHALL BE PROVIDED AS DETAILED, TYP

1 AP700 Signage - Typical MUTCD Standard Signs Schedule
Scale: 1/4" = 1'-0"

AS BUILT DRAWING
THIS DRAWING HAS BEEN PREPARED FROM CONTRACTOR FURNISHED INFORMATION. KUMIN ASSOCIATES, INC. MAKES NO WARRANTY, EXPRESSED OR IMPLIED, WITH REGARD TO THE ACCURACY OR COMPLETENESS OF THE INFORMATION NOW RECORDED IN THIS DRAWING. KUMIN ASSOCIATES, INC. WILL NOT ASSUME ANY LIABILITY, PROFESSIONAL OBLIGATION OR RISK THAT MIGHT OCCUR DUE TO THE RE-USE OF THIS INFORMATION.

KUMIN
ARCHITECTURE INTERIORS PLANNING
9101 JEWEL LAKE ROAD, STE 200
ANCHORAGE, AK 99502
907.272.5863 FAX 272.5301
CA LICENSE: AC-25231

NEESE BUILDING CONSTRUCTION, INC.

Childrens Dental Clinic Building
4441 Diplomacy Drive, Anchorage AK 99508
Southcentral Foundation

No.	Description	Date

Drawn By: SS
Checked By: JS
Date: 24 DEC 2018
Phase: RECORD DRAWINGS
Job No: 21519.00
SHEET TITLE: Striping & Signage General Notes, Sign Details
SHEET NO: AP700

04/2019 2:17:21 AM

RECORD DRAWINGS

GENERAL STRIPING & SIGNAGE NOTES

1. SEE SHEET AP700 FOR GENERAL STRIPING & SIGNAGE NOTES

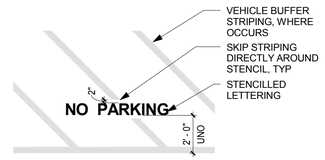

NOTES:
1. LETTERING: 8" HIGH, WHITE, 1/2" MIN STROKE WIDTH

8 / AP701 Striping - No Parking Stencil
Scale: 1/4" = 1'-0"

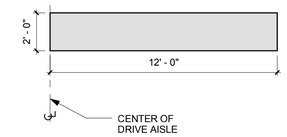

NOTES:
1. STRIPE COLOR: WHITE (SOLID)

3 / AP701 Striping - Typical Stop Bar
Scale: 1/4" = 1'-0"

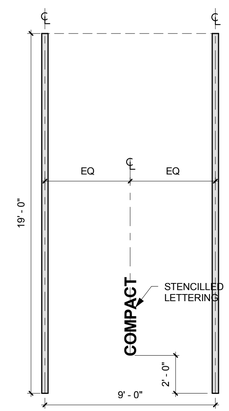

NOTES:
1. STRIPE COLOR: WHITE (SOLID)
2. STRIPE WIDTH: 4"
3. LETTERING: 8" HIGH, WHITE, 1/2" MIN STROKE WIDTH

10 / AP701 Striping - Typical Compact Stall
Scale: 1/4" = 1'-0"

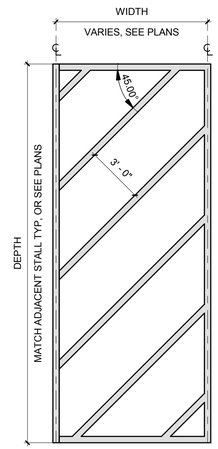

NOTES:
1. STRIPE COLOR: WHITE (SOLID)
2. STRIPE WIDTH: 4"

7 / AP701 Striping - Typical Vehicle Buffer
Scale: 1/4" = 1'-0"

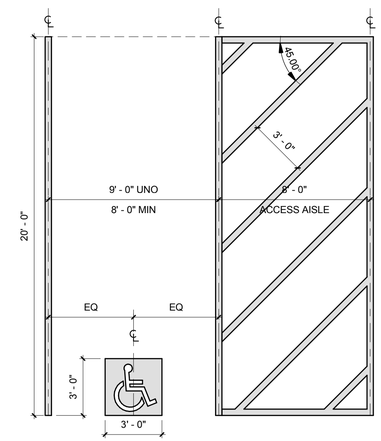

NOTES:
1. STRIPE COLOR: BLUE (SOLID)
2. STRIPE WIDTH: 4"
3. WHERE ACCESSIBLE STALL IS ADJACENT TO NON-ACCESSIBLE, PROVIDE BLUE STRIPE ON INSIDE OF STANDARD WHITE LINE PER MUTCD 3B.19
4. ADA SYMBOL: SOLID BLUE BACKGROUND; SOLID WHITE 3" WIDE SYMBOL STROKES

5 / AP701 Striping - Typical Van Accessible Stall
Scale: 1/4" = 1'-0"

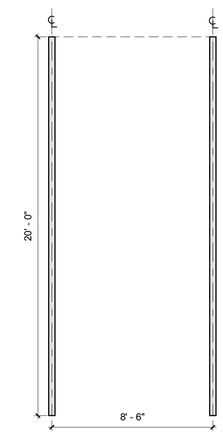

NOTES:
1. STRIPE COLOR: WHITE (SOLID)
2. STRIPE WIDTH: 4"

2 / AP701 Striping - Typical Employee Stall
Scale: 1/4" = 1'-0"

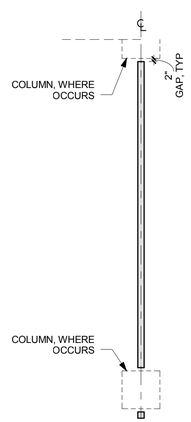

12 / AP701 Striping - Stripe at Column
Scale: 1/4" = 1'-0"

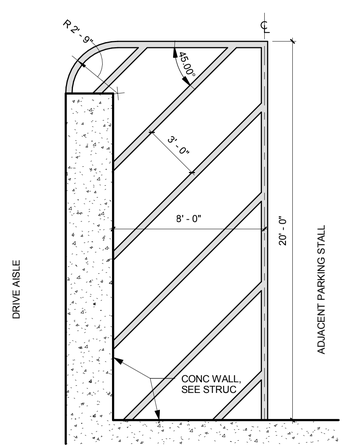

NOTES:
1. STRIPE COLOR: WHITE (SOLID)
2. STRIPE WIDTH: 4"

9 / AP701 Striping - Vehicle Buffer at Grid P5
Scale: 1/4" = 1'-0"

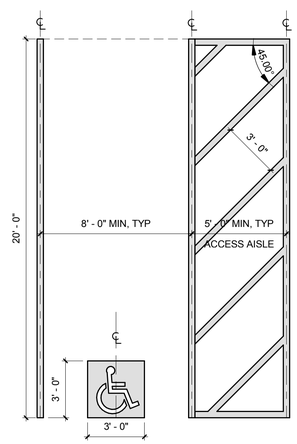

NOTES:
1. STRIPE COLOR: BLUE (SOLID)
2. STRIPE WIDTH: 4"
3. WHERE ACCESSIBLE STALL IS ADJACENT TO NON-ACCESSIBLE, PROVIDE BLUE STRIPE ON INSIDE OF STANDARD WHITE LINE PER MUTCD 3B.19
4. ADA SYMBOL: SOLID BLUE BACKGROUND; SOLID WHITE 3" WIDE SYMBOL STROKES

6 / AP701 Striping - Typical Car Accessible Stall
Scale: 1/4" = 1'-0"

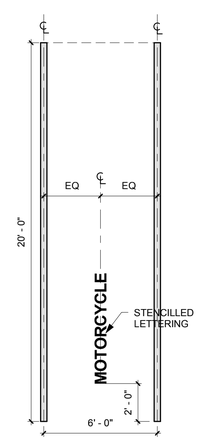

NOTES:
1. STRIPE COLOR: WHITE (SOLID)
2. STRIPE WIDTH: 4"
3. LETTERING: 8" HIGH, WHITE, 1/2" MIN STROKE WIDTH

4 / AP701 Striping - Typical Motorcycle Stall
Scale: 1/4" = 1'-0"

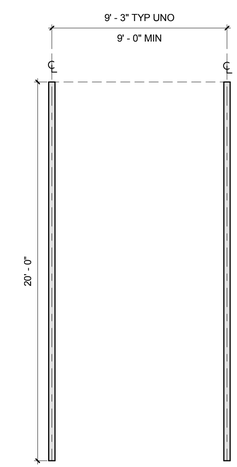

NOTES:
1. STRIPE COLOR: WHITE (SOLID)
2. STRIPE WIDTH: 4"

1 / AP701 Striping - Typical Standard Stall
Scale: 1/4" = 1'-0"

RECORD DRAWINGS

AS BUILT DRAWING
THIS DRAWING HAS BEEN PREPARED FROM CONTRACTOR FURNISHED INFORMATION. KUMIN ASSOCIATES, INC. MAKES NO WARRANTY, EXPRESSED OR IMPLIED, WITH REGARD TO THE ACCURACY OR COMPLETENESS OF THE INFORMATION NOW RECORDED IN THIS DRAWING. KUMIN ASSOCIATES, INC. WILL NOT ASSUME ANY LIABILITY, PROFESSIONAL OBLIGATION OR RISK THAT MIGHT OCCUR DUE TO THE RE-USE OF THIS INFORMATION.

KUMIN
ARCHITECTURE INTERIORS PLANNING
510 L STREET, STE 200 ANCHORAGE, AK 99501
907-272-5863 CA LICENSE: AC-2501
NEESE CONSTRUCTION, INC.

Childrens Dental Clinic Building

4441 Diplomacy Drive, Anchorage AK 99508
Southcentral Foundation

No.	Description	Date

Drawn By: SS
Checked By: JS
Date: 24 DEC 2018
Phase: RECORD DRAWINGS
Job No: 21519.00
SHEET TITLE: Striping Details

SHEET NO:
AP701

1/4/2019 2:17:24 AM

GENERAL STRUCTURAL NOTES

GENERAL

ALL TYPICAL DETAILS AND NOTES SHOWN ON THESE DRAWINGS ARE PART OF THE CONSTRUCTION CONTRACT AND SHALL BE PROVIDED BY THE CONTRACTOR. TYPICAL DETAILS MAY NOT NECESSARILY BE INDICATED ON THE PLANS, BUT SHALL APPLY AS SHOWN OR DESCRIBED IN THE DETAILS.

CODES

BUILDING CODE: ALL MATERIALS, WORKMANSHIP, DESIGN, AND CONSTRUCTION SHALL CONFORM TO THE DRAWINGS, SPECIFICATIONS AND THE INTERNATIONAL BUILDING CODE (IBC), 2012 EDITION, AS AMENDED BY THE MUNICIPALITY OF ANCHORAGE.

STANDARDS: REFERENCE TO ASTM AND OTHER STANDARDS SHALL MEAN THE LATEST EDITION IN EFFECT ON THE BID DATE, UNLESS NOTED IN THESE DOCUMENTS OR DESIGNATED BY THE GOVERNING CODE.

LOADS

FLOOR DESIGN DATA

IN ADDITION TO THE SELF WEIGHT, THE FOLLOWING LOADS ARE USED FOR DESIGN:

	UNIFORM LIVE LOAD (PSF)	CONCENTRATED LIVE LOAD (LBS)	SUPERIMPOSED DEAD LOAD (PSF)	REDUCIBLE (SEE NOTE)
CORRIDORS (UNO)	100	-	5	YES
GARAGES (PASSENGER VEHICLES ONLY)	40	3,000	5	(PER 1607.10.1.3 AND 1607.10.2)
SIDEWALKS AND VEHICULAR DRIVEWAYS SUBJECT	250	8,000	5	NO
STAIRS	100	300	5	YES

WHERE APPLICABLE, LIVE LOADS HAVE BEEN REDUCED PER IBC SECTION 1607.10.2

SNOW DESIGN DATA:

GROUND SNOW LOAD	P_g = 50 PSF (ASCE 7 FIGURE 7-1)
FLAT-ROOF SNOW LOAD	P_f = 42 PSF (ASCE 7 SECTION 7.3)
SNOW EXPOSURE FACTOR	C_e = 1.0 (ASCE 7 TABLE 7-2)
SNOW LOAD IMPORTANCE FACTOR	I_s = 1.0 (RISK CATEGORY II, ASCE 7 SECTION 7.3.3)
THERMAL FACTOR	C_t = 1.2 (ASCE 7 TABLE 7-3)
ROOF EXPOSURE	PARTIALLY EXPOSED (ASCE 7 TABLE 7-2)
TERRAIN CATEGORY	B (ASCE 7 SECTION 26.7)

WIND DESIGN DATA:

ENCLOSURE CLASSIFICATION	PARTIALLY ENCLOSED (ASCE 7 SECTION 26.10.1)
TYPE OF STRUCTURE	RIGID (ASCE 7 SECTION 26.9.2)
* BASIC WIND SPEED (ULTIMATE) (3 SECOND GUST)	V = 155 MPH (ANCHORAGE WIND ZONE MAP)
EXPOSURE CATEGORY	B (ASCE 7 SECTION 26.7)
INTERNAL PRESSURE COEFFICIENT	+ / - 0.18, PARTIALLY ENCLOSED (ASCE 7 TABLE 26.11-1)
DIRECTIONALITY FACTOR	K_d = 0.85 : MWFRS (ASCE 7 TABLE 26.6-1) K_d = 0.85 : COMPONENTS AND CLADDING (ASCE 7 TABLE 26.6-1)
TOPOGRAPHIC FACTOR	K_{zt} = 1.0 (ASCE 7 SECTION 26.8)

* ULTIMATE WIND SPEED IS EQUIVALENT TO PREVIOUS CODE ALLOWABLE WIND SPEED OF 120 MPH.

EARTHQUAKE DESIGN DATA:

SEISMIC-FORCE-RESISTING SYSTEM:	SPECIAL REINFORCED CONCRETE SHEAR WALLS
ANALYTICAL PROCEDURE:	MODAL ANALYSIS
SEISMIC BASE SHEAR: (ASCE 7 SECTION 12.8.1)	V_E (N-S) = 5132 KIPS V_E (E-W) = 5132 KIPS
SEISMIC RESPONSE COEFFICIENT: (ASCE 7 SECTION 12.8.1.1)	C_s (N-S) = 0.17 C_s (E-W) = 0.17
SEISMIC IMPORTANCE FACTOR I_e	1.0 (OCCUPANCY CATEGORY II, ASCE 7 TABLE 1.5-2)
SITE CLASS	D (ASCE 7 SECTION 11.4.2)

S_S = 1.5 (ASCE 7 SECTION 11.4.1)
S_1 = 0.68 (ASCE 7 SECTION 11.4.1)
S_{DS} = 1.0 (ASCE 7 SECTION 11.4.4)
S_{D1} = 0.68 (ASCE 7 SECTION 11.4.4)

SEISMIC DESIGN CATEGORY	D (ASCE 7 SECTION 11.6)
RESPONSE MODIFICATION COEFFICIENT	R = 5.0 (ASCE 7 TABLE 12.2-1)
SYSTEM OVERSTRENGTH FACTOR	$OMEGA_O$ = 2.5 (ASCE 7 TABLE 12.2-1)
DEFLECTION AMPLIFICATION FACTOR	C_d = 5.0 (ASCE 7 TABLE 12.2-1)

CRITERIA

GEOTECHNICAL

SOIL BEARING SURFACES AND FILL SHALL BE PREPARED IN ACCORDANCE WITH THE GEOTECHNICAL REPORT AND INSPECTED BY THE GEOTECHNICAL ENGINEER OR AN APPROVED TESTING AGENCY.

GEOTECHNICAL REPORT REFERENCE: NORTHERN GEOTECHNICAL ENGINEERING, INC.
REPORT # 4282-15, DATED JANUARY 12, 2016
SUPPLEMENTAL REPORT # 4392-16, DATED MAY 17, 2016
SUPPLEMENTAL LETTER # 4282-15, DATED JULY 17, 2016

FOOTINGS SHALL BE FOUNDED AT LEAST 60" BELOW LOWEST ADJACENT EXTERIOR FINISHED GRADE. THE OWNER APPOINTED GEOTECHNICAL ENGINEER SHALL APPROVE FOOTING EXCAVATION / PREPARATION PRIOR TO PLACEMENT OF ALL FOOTINGS. FOOTING DEPTHS AND ELEVATIONS SHOWN ON DRAWINGS ARE MINIMUM AND FOR GUIDANCE ONLY; CONTRACTOR SHALL ESTABLISH ACTUAL ELEVATIONS IN FIELD. BACKFILL BEHIND ALL WALLS AND PROVIDE FOR SUBSURFACE DRAINAGE AS RECOMMENDED IN THE GEOTECHNICAL REPORT.

SOIL PROFILE TYPE	SITE CLASS "C"
ALLOWABLE VERTICAL DESIGN PRESSURE	VARIES BASED ON SUPPLEMENTAL GEOTECHNICAL INFORMATION
LATERAL EARTH PRESSURE, LEVEL BACKFILL:	
UNRESTRAINED (ACTIVE)	42 PCF
RESTRAINED (AT-REST)	55 PCF
SEISMIC SURCHARGE	14H PSF (RESTRAINED) 25 PCF (UNRESTRAINED)
ALLOWABLE PASSIVE PRESSURE	380 PCF / 280 PCF (DRAINED / UNDRAINED), FS = 1.5
ALLOWABLE FRICTION COEFFICIENT	0.40, FS = 1.5

SUBMITTALS

SHOP DRAWINGS SHALL BE SUBMITTED TO THE ENGINEER FOR REVIEW PRIOR TO FABRICATION OR CONSTRUCTION OF THESE ITEMS:

- CONCRETE MIX DESIGN
- CONCRETE REINFORCING
- POST-TENSIONING
- STRUCTURAL STEEL
- STEEL DECK
- WELDER'S QUALIFICATIONS
- EMBEDDED ITEMS IN CONCRETE
- COLD-FORMED STEEL FRAMING

CONTRACTOR SHALL REVIEW AND STAMP SUBMITTALS PRIOR TO SUBMISSION. DIMENSIONS AND QUANTITIES ARE CONTRACTOR'S RESPONSIBILITY AND WILL NOT BE REVIEWED. CONTRACTOR SHALL BE RESPONSIBLE FOR ALL MATERIALS PLACED PRIOR TO RECEIPT OF REVIEWED SHOP DRAWINGS. CONTRACTOR SHALL ALLOW A MINIMUM OF 10 WORKING DAYS FOR REVIEW.

SHOP DRAWING SUBMITTALS PROCESSED BY THE ENGINEER ARE NOT CHANGE ORDERS. THE PURPOSE OF SHOP DRAWING SUBMITTALS BY THE CONTRACTOR IS TO DEMONSTRATE TO THE ENGINEER THAT THE CONTRACTOR UNDERSTANDS THE DESIGN CONCEPT BY INDICATING WHICH MATERIAL IS INTENDED TO BE FURNISHED AND INSTALLED AND BY DETAILING THE INTENDED FABRICATION AND INSTALLATION METHODS. IF DEVIATIONS, DISCREPANCIES, OR CONFLICTS BETWEEN SHOP DRAWING SUBMITTALS AND THE CONTRACT DOCUMENTS ARE DISCOVERED EITHER PRIOR TO OR AFTER SHOP DRAWING SUBMITTALS ARE PROCESSED BY THE ENGINEER, THE DESIGN DRAWINGS AND SPECIFICATIONS SHALL CONTROL AND SHALL BE FOLLOWED.

DEFERRED SUBMITTALS: DRAWINGS AND CALCULATIONS FOR BIDDER-DESIGNED COMPONENTS, SEALED BY THE REGISTERED PROFESSIONAL ENGINEER RESPONSIBLE FOR THE DESIGN, SHALL BE SUBMITTED TO THE ARCHITECT FOR REVIEW OF GENERAL CONFORMANCE WITH THE DESIGN OF THE BUILDING. DEFERRED SUBMITTALS INCLUDE:

- POST-TENSIONED TENDON ELONGATIONS
- CALCULATIONS
- SEISMIC BRACING AND ANCHORAGE OF MECHANICAL EQUIPMENT PER NOTES BELOW
- PREFABRICATED STEEL STAIRS
- CURTAIN WALL AND CLADDING SYSTEMS
- METAL STUD FRAMING
- ROOFING ATTACHMENTS

SUBMITTALS OF CONTRACTOR-DESIGNED COMPONENTS SHALL INCLUDE LOCATIONS, MAGNITUDES, AND DIRECTIONS OF ALL FORCES TRANSFERRED TO THE STRUCTURE. CALCULATIONS SUBMITTED FOR CONTRACTOR-DESIGNED COMPONENTS ARE FOR INFORMATION ONLY AND WILL NOT BE REVIEWED.

SEISMIC BRACING AND ANCHORAGE OF MECHANICAL UNITS AND OTHER MECHANICAL AND ELECTRICAL FIXTURES NOT SPECIFICALLY SHOWN ON THE PROJECT DRAWINGS SHALL BE DESIGNED BY A REGISTERED STRUCTURAL ENGINEER IN THE STATE WHERE THE PROJECT IS LOCATED. THE MECHANICAL AND ELECTRICAL CONTRACTORS MUST RETAIN THE SERVICES OF A STRUCTURAL ENGINEER AND IS RESPONSIBLE FOR ALL COSTS RELATED TO THE PURCHASE AND INSTALLATION OF SEISMIC BRACING AND ANCHORAGE OF THEIR SYSTEMS.

SPECIAL INSPECTION, PER IBC SECTION 1704, SHALL BE PERFORMED BY AN AGENCY APPROVED BY THE BUILDING OFFICIAL AND AS OUTLINED IN THE STRUCTURAL INSPECTION SCHEDULE, SHEET SP103.

STRUCTURAL OBSERVATION SHALL BE PERFORMED PER IBC SECTION 1704.

CONTRACTOR-INITIATED CHANGES SHALL BE SUBMITTED IN WRITING TO THE ARCHITECT FOR APPROVAL AT LEAST 10 WORKING DAYS PRIOR TO FABRICATION AND CONSTRUCTION. CHANGES SHOWN ON SHOP DRAWINGS OR SUBMITTALS ONLY WILL NOT SATISFY THIS REQUIREMENT.

CONTRACTOR RESPONSIBILITIES: DRAWINGS REPRESENT DESIGN OF STRUCTURE IN COMPLETED FORM. CONTRACTOR SHALL BE RESPONSIBLE FOR METHODS, SEQUENCES, AND SAFETY PRECAUTIONS REQUIRED TO PERFORM WORK.

CONTRACTOR SHALL DESIGN AND PROVIDE TEMPORARY SHORING AND BRACING OF ALL STRUCTURAL MEMBERS AND SOIL EXCAVATION AS REQUIRED. SHORING AND BRACING SHALL NOT BE REMOVED UNTIL ALL FINAL CONNECTIONS HAVE BEEN COMPLETED IN ACCORDANCE WITH THE DRAWINGS, AND MATERIALS HAVE ACHIEVED DESIGN STRENGTH.

DISCREPANCIES: IN CASE OF DISCREPANCIES BETWEEN DRAWINGS, SPECIFICATIONS, REFERENCE STANDARDS, OR GOVERNING CODE, THE MORE STRINGENT REQUIREMENTS SHALL GOVERN. CONTRACTOR SHALL NOTIFY THE ENGINEER OF DISCREPANCIES AND OBTAIN DIRECTION PRIOR TO PROCEEDING. NOTES ON INDIVIDUAL STRUCTURAL DRAWINGS SHALL TAKE PRIORITY OVER GENERAL STRUCTURAL NOTES. NOTED DIMENSIONS TAKE PRECEDENCE OVER SCALED DIMENSIONS. DO NOT SCALE DRAWINGS.

ARCHITECTURAL: REFER TO ARCHITECTURAL DRAWINGS FOR ELEVATIONS, SLOPES, DEPRESSIONS, NON-BEARING WALLS, FASCIA, ELEVATORS, STAIRS, CURBS, DRAINS, RAILINGS, WATERPROOFING, FINISHES, ETC.

CONCRETE:

REFERENCE STANDARDS: CONCRETE SHALL CONFORM TO ALL REQUIREMENTS OF THE FOLLOWING DOCUMENTS, EXCEPT AS MODIFIED BELOW:

ACI 301	"SPECIFICATIONS FOR STRUCTURAL CONCRETE"
ACI 318	"BUILDING CODE REQUIREMENTS FOR STRUCTURAL CONCRETE"
ACI 304	"GUIDE FOR MEASURING, MIXING, TRANSPORTING, AND PLACING CONCRETE"
ACI 311	"GUIDE FOR CONCRETE INSPECTION"
ACI SP-15*	"FIELD REFERENCE MANUAL"

*A COPY SHALL BE KEPT IN THE CONTRACTOR'S FIELD OFFICE AT ALL TIMES.

MATERIALS:

CEMENT	ASTM C150, C595
*AGGREGATES	ASTM C33
ADMIXTURES	ASTM C260, C494, C1017

*AGGREGATES THAT EXHIBIT DELETERIOUS ACTIVITY WHEN EVALUATED IN ACCORDANCE WITH ASTM C33 APPENDIX X1 SHALL NOT BE USED. SAND EQUIVALENT FOR FINE AGGREGATE SHALL NOT EXCEED 75.

CONCRETE SHALL BE PROPORTIONED TO ACHIEVE A WORKABLE MIX THAT CAN BE PLACED WITHOUT SEGREGATION OR EXCESS FREE SURFACE WATER. MIX DESIGNS SHALL BE SUBMITTED FOR REVIEW BY ENGINEER PRIOR TO USE. COMPLY WITH IBC SECTION 1904. MIXES SHALL MEET OR EXCEED THE FOLLOWING CRITERIA:

TYPE OF CONSTRUCTION	SPECIFIED COPMRESSIVE STRENGTH (f'c)	TEST AGE	MAXIMUM WATER/CEMENT RATIO	EXPOSURE CLASS (ACI 318-11 TABLES 4.2.1 AND 4.3.1)	ENTRAINED AIR (ACI 318-11 TABLE 4.4.1) 3/4" / 3/8" AGG.
CONCRETE EXPOSED TO WEATHER (BASEMENT WALLS AND COLUMNS)	4,500 PSI 5,000 PSI	28 DAYS 56 DAYS	0.40 (+/- 0.01)	F1, S0, P0, C2	5% / 6% AIR ***
CONCRETE EXPOSED TO EARTH (FOOTINGS)	4,500 PSI	28 DAYS	0.45 (+/- 0.01)	F2, S0, P0, C1	6% / 7.5% AIR ***
SHEAR WALLS	5,000 PSI	28 DAYS	0.40 (+/- 0.01)	F1, S0, P0, C2	5% / 6% AIR ***
POST-TENSIONED SLABS AND BEAMS	5,000 PSI* 3,000 PSI	28 DAYS 3 DAYS	0.40 (+/- 0.01)	F1, S0, P0, C2	5% / 6% AIR ***
SLABS ON GRADE AND CONCRETE ON METAL DECK AND MISCELLANEOUS CONCRETE	4,500 PSI 5,000 PSI	28 DAYS 56 DAYS	**	F1, S0, P0, C1	5% / 6% AIR ***

*MIX SHALL BE PROPORTIONED SUCH THAT POST-TENSIONED SLAB DRYING SHRINKAGE NOT EXCEED 0.035 % AT 28 DAYS (LABORATORY CONDITIONS). SUBMIT STRENGTH AND SHRINKAGE TEST DATA AND MIX DESIGN TO THE ARCHITECT FOR REVIEW BY ENGINEER A MINIMUM OF TWO WEEKS PRIOR TO PLACING ANY CONCRETE.

**WATER-CEMENTITIOUS MATERIAL RATIO FOR INTERIOR SLABS SHALL BE 0.40 (+/- 0.01) UNLESS OTHERWISE NOTED.

***ALL CONCRETE MIXES SHALL CONTAIN AN AIR-ENTRAINING AGENT COMPLYING WITH ASTM C260. THE AMOUNT OF ENTRAINED AIR SHALL BE IN ACCORDANCE WITH ACI 318-11 TABLE 4.4.1. TESTS FOR AIR CONTENT SHALL BE MADE AT THE DISCHARGE END OF THE TRUCK'S PLACING HOSE IN ACCORDANCE WITH ASTM C173.

ADMIXTURES: ALL CONCRETE, INCLUDING SLABS ON GRADE, SHALL HAVE A WATER-REDUCING ADMIXTURE COMPLYING WITH ASTM C494 ADDED IN ACCORDANCE WITH MANUFACTURER'S INSTRUCTIONS. CALCIUM CHLORIDE OR OTHER CHLORIDE ADMIXTURES SHALL NOT BE USED.

WATER/CEMENT RATIO SHALL BE MEASURED BY WEIGHT AND BE BASED ON TOTAL CEMENTITIOUS MATERIAL, INCLUDING CEMENT AND POZZOLANS SUCH AS FLY ASH AND SILICA FUME.

MAXIMUM AGGREGATE SIZE SHALL BE 3/4 , BUT NOT MORE THAN 3/4 TIMES THE CLEAR DISTANCE BETWEEN REINFORCING BARS NOR 1/5 TIMES THE NARROWEST DIMENSION BETWEEN SIDES OF FORMS. MAXIMUM AGGREGATE SIZE FOR SLABS ON GRADE SHALL BE 1/3 TIMES THE SLAB THICKNESS.

SLUMP REQUIRED FOR PROPER PLACEMENT SHALL BE DETERMINED BY CONTRACTOR AND SUPPLIER, AND INCLUDED IN MIX DESIGN SUBMITTALS. FIELD MEASURED SLUMP SHALL CONFORM TO SUBMITTED CONCRETE MIX DESIGN. SLUMP SHALL CONFORM TO ASTM C94.

MASS CONCRETE

CONCRETE PLACED IN MONOLITHIC PLACEMENTS WHERE THE MINIMUM OF ALL THREE DIMENSIONS EXCEEDS 2'-6" SHALL BE CONSIDERED "MASS CONCRETE" AND SHALL BE SUBJECT TO THE APPLICABLE REQUIREMENTS OF ACI 301, CHAPTER 8.

ASTM C150 TYPE III CEMENT IS PROHIBITED. UNLESS OTHERWISE SPECIFIED, USE MODERATE OR LOW HEAT OF HYDRATION CEMENT, BLENDED HYDRAULIC CEMENT WITH MODERATE OR LOW HEAT OF HYDRATION PROPERTIES, OR PORTLAND CEMENT WITH FLY ASH, POZZOLAN, OR GROUND-GRANULATED BLAST-FURNACE SLAG. ADDITIVES CONTAINING CALCIUM CHLORIDE ARE PROHIBITED. APPROVED RETARDING, RETARDING HIGH-RANGE WATER REDUCING, OR RETARDING PLASTICIZING ADMIXTURE SHALL BE USED.

THE TEMPERATURE OF CONCRETE AT TIME OF PLACEMENT SHALL NOT EXCEED 90 DEGREES FAHRENHEIT PER ASTM C94. THE AMBIENT TEMPERATURE AT TIME OF PLACEMENT SHALL NOT EXCEED 90 DEGREES FAHRENHEIT OR BE LESS THAT 35 DEGREES FAHRENHEIT. THE MAXIMUM INTERNAL TEMPERATURE DURING CURING SHALL NOT EXCEED 160 DEGREES FAHRENHEIT. CONFORM TO THE REQUIREMENTS OF ACI 305.1 AND ACI 306.1 FOR HOT-WEATHER AND COLD-WEATHER CONCRETING, RESPECTIVELY. IF COOLING METHODS ARE EMPLOYED, THEY SHALL NOT INCREASE THE WATER-CEMENT RATIO OR SLUMP BEYOND ALLOWABLE LIMITS. THE CONCRETE SHALL BE COOLED GRADUALLY SO THAT THE SURFACE TEMPERATURE DROP DOES NOT EXCEED 20 DEGREES FAHRENHEIT IN ANY 24-HOUR PERIOD AFTER PLACEMENT.

SUBMIT DETAILED PROCEDURES, MATERIALS, MIX DESIGNS, AND THE TEST RESULTS INCLUDING HEAT OF HYDRATION TEST DATA PER ASTM C186 TO THE ENGINEER BEFORE CONSTRUCTION OF MASS CONCRETE.

EMBEDDED ITEMS: CONDUIT AND SLEEVES SHALL NOT BE EMBEDDED IN OR PASS THROUGH CONCRETE WITHOUT APPROVAL. ALUMINUM ITEMS SHALL NOT BE EMBEDDED IN CONCRETE. SUBMIT CONDUIT LAYOUT AND EMBEDDED ITEM PLANS TO THE ARCHITECT FOR REVIEW BY ENGINEER PRIOR TO PLACING CONCRETE.

BONDING AGENT SHALL BE EPOXY RESIN BASED CONFORMING TO ASTM C881, TYPE V, GRADE 2. USE WHERE NEW CONCRETE IS PLACED AGAINST PREVIOUSLY PLACED OR EXISTING CONCRETE. PLACE IN STRICT ACCORDANCE WITH MANUFACTURER'S INSTRUCTIONS, INCLUDING PREPARATION OF EXISTING SURFACES.

RECORD DRAWING
THESE RECORD DRAWINGS HAVE BEEN PREPARED FROM CONTRACTOR FURNISHED INFORMATION. THERE IS NO GUARANTEE AS TO THE ACCURACY OR COMPLETENESS OF THE INFORMATION CONTAINED HEREIN. RMI WAS NOT RETAINED TO VERIFY THE FIELD CONDITIONS.
COURTNEY WILLOUGHBY
DATE: 12/24/18
REID MIDDLETON INC.

KUMIN
ARCHITECTURE INTERIORS PLANNING
808 E STREET, STE 200 ANCHORAGE, AK 99501
T 907.272.8833 KUMINALASKA.COM

NEESER CONSTRUCTION, INC.

Reid Middleton
4300 B St., Suite 302 Anchorage, AK 99503
Phone: 907 562-3439 - www.reidmiddleton.com
Corporate License #AECC598
© Copyright Reid Middleton, Inc. 2017

Childrens Dental Clinic Building
4441 Diplomacy Drive, Anchorage AK 99508
Southcentral Foundation

No.	Description	Date

Drawn By: RLC | Checked By: SES
Date: 24 DEC 2018
Phase: RECORD DRAWINGS
Job No: 402016.015
SHEET TITLE: GENERAL NOTES
SHEET NO: SP101

C:\Users\gbaginski\Documents\SCF CDC Garage_Structural RECORD DWGS_2015_gbaginski.rvt
12/21/2018 3:46:34 PM

GENERAL STRUCTURAL NOTES

NON-SHRINK GROUT SHALL BE "MASTERFLOW 100" BY BASF, OR APPROVED EQUAL, AND SHALL BE MIXED AND PLACED IN ACCORDANCE WITH MANUFACTURER'S INSTRUCTIONS. GROUT STRENGTH SHALL BE AT LEAST EQUAL TO THE MATERIAL ON WHICH IT IS PLACED (3,000 PSI MINIMUM).

CONSTRUCTION JOINTS IN WALLS SHALL BE KEYED IN ACCORDANCE WITH TYPICAL CONSTRUCTION JOINT DETAILS SHOWN ON DRAWINGS OR, AT CONTRACTOR'S OPTION, SHALL BE AN INTENTIONALLY ROUGHENED CONSTRUCTION JOINT DEFINED BY THE FOLLOWING:

1. SURFACE OF JOINT SHALL BE SAND BLASTED OR ROUGHENED WITH A CHIPPING HAMMER TO EXPOSE AGGREGATE EMBEDDED IN PREVIOUS POUR.
2. EXPOSED AGGREGATE SHALL PROTRUDE 1/4" MINIMUM.
3. JOINT SURFACE SHALL BE CLEANED AND LAITANCE REMOVED.
4. JOINT SHALL BE WETTED AND STANDING WATER REMOVED IMMEDIATELY BEFORE NEW CONCRETE IS PLACED.

SUBMIT CONSTRUCTION JOINT LAYOUT PLAN TO THE ARCHITECT FOR REVIEW BY ENGINEER PRIOR TO PLACING CONCRETE.

COORDINATION: SEE ARCHITECTURAL DRAWINGS FOR LOCATIONS AND DIMENSIONS OF DOOR AND WINDOW OPENINGS IN CONCRETE WALLS. SEE MECHANICAL DRAWINGS FOR SIZE AND LOCATION OF MISCELLANEOUS MECHANICAL OPENINGS THROUGH CONCRETE CONSTRUCTION. SEE ARCHITECTURAL DRAWINGS FOR ALL GROOVES, NOTCHES, CHAMFERS, FEATURE STRIPS, COLOR, TEXTURE, AND OTHER FINISH DETAILS AT EXPOSED CONCRETE SURFACES.

CONCRETE REINFORCMENT

REFERENCE STANDARDS: CONCRETE REINFORCEMENT SHALL CONFORM TO ALL REQUIREMENTS OF THE FOLLOWING CODES, SPECIFICATIONS, AND STANDARDS, EXCEPT AS MODIFIED BELOW:

ACI 301	"SPECIFICATIONS FOR STRUCTURAL CONCRETE"
ACI SP-66	"ACI DETAILING MANUAL"
ACI 318	"BUILDING CODE REQUIREMENTS FOR STRUCTURAL CONCRETE"
CRSI	"PLACING REINFORCING BARS"
CRSI	"MANUAL OF STANDARD PRACTICE" MSP-1
WRI	"WELDED WIRE FABRIC MANUAL OF STANDARD PRACTICE"

MATERIALS:

DEFORMED BARS	ASTM A615, GRADE 60
SEISMIC DEFORMED BARS*	ASTM A706, GRADE 60 LOW ALLOY
SMOOTH WELDED WIRE	ASTM A185, Fy = 56KSI (< W1.2) & 65KSI (> W1.2)
DEFORMED WELDED WIRE	ASTM A497, 70 KSI YIELD
DEFOREMED BAR ANCHORS (DBA, D2L)	ASTM A496, 75 KSI YIELD
BAR SUPPORTS	CONFORM TO CHAPTER 3, CRSI MSP-1
WELDED HEADED STUDS	ASTM A108

*SEISMIC DEFORMED BARS SHALL BE USED FOR LONGITUDINAL REINFORCEMENT IN COLUMNS, PILES, STRUT MEMBERS, COUPLING BEAMS, VERTICAL REINFORCEMENT IN SHEAR WALLS, AND MOMENT FRAMES. ASTM A615, GRADE 60 BARS MAY BE USED IF:
(1) ACTUAL YIELD STRENGTH BASED ON MILL TESTS DOES NOT EXCEED THE SPECIFIED STRENGTH BY MORE THAN 18 KSI (RETESTS SHALL NOT EXCEED THIS VALUE BY MORE THAN AN ADDITIONAL 3 KSI) AND
(2) RATIO OF ACTUAL TENSILE STRENGTH TO ACTUAL YIELD STRENGTH IS NOT LESS THAN 1.25.
IF MILL TEST REPORTS ARE NOT AVAILABLE, REINFORCEMENT SHALL BE TESTED AT THE CONTRACTOR'S EXPENSE.

REINFORCEMENT SHALL BE PLACED AND SUPPORTED IN ACCORDANCE WITH CRSI MSP-1. REINFORCEMENT SHALL BE DETAILED IN ACCORDANCE WITH ACI SP-66. NO BENDING OR STRAIGHTENING OF REINFORCEMENT WILL BE PERMITTED AFTER PARTIAL EMBEDMENT IN CONCRETE.

LAP ALL CONTINUOUS REINFORCEMENT IN ACCORDANCE WITH REINFORCEMENT SPLICE AND DEVELOPMENT LENGTH SCHEDULE, SHEET SP502. PROVIDE CORNER BARS AT ALL WALL AND FOOTING INTERSECTIONS. LAP ADJACENT MATS OF WELDED WIRE FABRIC A MINIMUM OF 1 CROSS WIRE SPACING + 2" OR 6" WHICHEVER IS GREATER.

WELDING OR TACK WELDING OF REINFORCING BARS OUTSIDE OF PLASTIC HINGE REGIONS TO OTHER BARS OR TO PLATES, ANGLES, ETC IS PROHIBITED, EXCEPT WHERE SPECIFICALLY APPROVED. WHERE WELDING IS APPROVED, IT SHALL BE DONE BY AWS CERTIFIED WELDERS USING E9018 ELECTRODES. WELDING PROCEDURES SHALL COMPLY WITH AWS-D1.4.

MECHANICAL SPLICING OF REINFORCING BARS SHALL BE THE FOLLOWING SYSTEMS AND SHALL DEVELOP A MINIMUM OF 125% OF THE SPECIFIED YIELD STRENGTH OF THE BARS:

LENTON STANDARD, LENTON LOCK, LENTON FORMSAVER, DAYTON SUPERIOR BAR LOCK L-SERIES, DAYTON SUPERIOR, OR DBDI MECHANICAL SPLICE SYSTEM.

MECHANICAL SPLICES SHALL BE INSTALLED PER MANUFACTURER'S INSTRUCTIONS AND APPLICABLE ICC OR IAPMO EVALUATION REPORTS.

CONCRETE COVER: UNLESS NOTED OTHERWISE, MINIMUM CONCRETE COVER FOR REINFORCEMENT SHALL BE:

ELEVATED SLABS	3/4" (#11 AND SMALLER), 1-1/2" (#14 AND #18)
SLABS ON GRADE	2" BOTTOM
INTERIOR WALL FACES	3/4" (#11 AND SMALLER), 1-1/2" (#14 AND #18)
EXPOSED FORMED WALL FACES	1-1/2" (#5 AND SMALLER), 2" (#6 AND LARGER)
FOOTINGS	3" (EXCEPT 2" TOP AND FORMED SIDES)
BEAMS, COLUMNS	1-1/2" (ALL REINFORCEMENT INCLUDING TIES, SPIRALS, STIRRUPS)

CONCRETE ANCHORAGE

POST-INSTALLED ANCHORS INTO NORMAL-WEIGHT CONCRETE SHALL BE INSTALLED PER MANUFACTURER'S INSTRUCTIONS AND APPLICABLE IAPMO OR ICC-ES REPORTS. SUBSTITUTES PROPOSED BY CONTRACTOR SHALL BE SUBMITTED TO THE ARCHITECT FOR REVIEW BY ENGINEER WITH IAPMO OR ICC-ES REPORTS INDICATING EQUIVALENT OR GREATER LOAD CAPACITIES. ANCHORS SHALL BE THE FOLLOWING TYPES:

EXPANSION ANCHORS SHALL BE HILTI "KWIK BOLT TZ" (ESR-1917) OR SIMPSON STRONG BOLT 2 (ESR 3037) OR POWERS POWER STUD+ SD2 (ESR-2502).

UNDERCUT ANCHORS SHALL BE USP DUC (ESR-1970), HILTI HDA (ESR-1546) OR POWERS ATOMIC+ UNDERCUT ANCHOR (ESR-3067).

ADHESIVE ANCHORS SHALL BE HILTI HIT-RE 500-V3 (ESR-3814) OR SIMPSON SET-XP (ESR-2508) OR POWERS PE 1000+ (ESR-2583).

SCREW ANCHORS INTO CONCRETE SHALL BE SIMPSON TITEN HD (ESR-2713), POWERS WEDGE-BOLT+ (ESR-2526) OR POWERS SNAKE+ (ESR-2272).

DRIVE PINS AND OTHER POWDER-ACTUATED FASTENERS SHALL BE ITW RAMSET/RED HEAD (ESR-1799), POWERS POWER ACTUATED (ESR-2024), HILTI X-U OR X-P FASTENERS (ESR-2769).

NO REINFORCING BARS SHALL BE CUT TO INSTALL ANCHORS. ALL DEFECTIVE ANCHOR HOLES SHALL BE GROUTED WITH EPOXY ADHESIVE AND A NEW HOLE DRILLED A MINIMUM OF 3 BOLT DIAMETERS AWAY. POST-INSTALLED CONCRETE ANCHORS ARE NOT PERMITTED IN POST-TENSIONED CONCRETE SLABS, EXCEPT AS PERMITTED UNDER POST-TENSIONING NOTES.

POST TENSIONING

REFERENCE STANDARDS: POST-TENSIONING SHALL CONFORM TO ALL REQUIREMENTS OF THE FOLLOWING DOCUMENTS:

ACI 318
ACI 423.6
PTI
PTI

"SPECIFICATIONS FOR STRUCTURAL CONCRETE"
"ACI DETAILING MANUAL"
"BUILDING CODE REQUIREMENTS FOR STRUCTURAL CONCRETE"
"PLACING REINFORCING BARS"

POST-TENSIONING STEEL SHALL BE ASTM A416 GRADE 270, 1/2" DIAMETER, SEVEN WIRE LOW-RELAXATION UNBONDED STRAND. STRAND SHALL BE ENCASED IN CONTINUOUSLY EXTRUDED POLYETHYLENE SHEATHING WITH A MINIMUM THICKNESS OF 50 MILS. GREASE MEETING PTI RECOMMENDATIONS SHALL BE SHOP APPLIED UNDER PRESSURE. MILL CERTIFICATES SHALL BE PROVIDED BY STRAND SUPPLIER AND KEPT ON FILE BY CONTRACTOR FOR THE JOB DURATION.

ANCHORAGES AND COUPLERS SHALL COMPLY WITH ACI 318 SECTION 18.21.

TENDON PLACEMENT: TENDONS SHALL BE INSTALLED WITH A PARABOLIC DRAPE CONFORMING TO THE PROFILE CONTROL POINTS SHOWN ON THE DRAWINGS. CONTROL POINTS INDICATE THE DISTANCE FROM THE CONCRETE SOFFIT TO THE TENDON GROUP CENTROID. UNLESS NOTED OTHERWISE, HIGH POINTS ARE AT SUPPORTS AND LOW POINTS ARE AT MIDSPAN. AT LEAST TWO TENDONS SHALL PASS WITHIN 12" FROM THE FACE OF EACH COLUMN IN EACH DIRECTION. WHEN TENDONS ARE TERMINATED AT INTERIOR SPANS, EXTEND TENDONS A DISTANCE OF 1/3 THE SPAN PAST THE SUPPORT.

CONCRETE COVER: UNLESS OTHERWISE NOTED IN THE DRAWINGS, TENDONS IN SLABS SHALL HAVE A MINIMUM OF 2" CONCRETE COVER AT TOP, 1" COVER BOTTOM AND 2" SIDE COVER. END SPANS SHALL HAVE A MINIMUM OF 1 1/2" BOTTOM COVER. ANCHORAGES SHALL HAVE A MINIMUM OF 2 1/2" COVER.

TENDON SUPPORT: TENDONS SHALL BE SECURED TO A SUFFICIENT NUMBER OF POSITIONING DEVICES TO ENSURE CORRECT LOCATION DURING AND AFTER CONCRETE PLACEMENT, AND SHALL BE SUPPORTED AT A MAXIMUM SPACING OF 3'-0". SUPPORT BARS ARE NOT INCLUDED IN THE DRAWINGS AND MUST BE PROVIDED BY THE CONTRACTOR. PLASTIC TIP OR STAINLESS STEEL LEGGED CHAIRS SHALL BE USED ON ALL EXPOSED SURFACES.

TENDON LOCATION: VERTICAL TOLERANCES FOR TENDONS AND ANCHORAGES SHALL BE +/- 1/4" (+/- 3/8" FOR MEMBERS DEEPER THAN 8") EXCEPT THAT 1" MINIMUM CONCRETE COVER SHALL BE MAINTAINED AT ALL TIMES. MAXIMUM SPACING OF SLAB TENDONS SHALL BE 8 TIMES THE THICKNESS OF THE SLAB, BUT NOT GREATER THAN 5'-0". SLIGHT DEVIATIONS IN SPACING OF SLAB TENDONS WILL BE PERMITTED WHEN REQUIRED TO AVOID OPENINGS, INSERTS, AND DOWELS THAT ARE SPECIFICALLY LOCATED. TENDON DEVIATIONS SHALL HAVE A HORIZONTAL RADIUS OF CURVATURE OF NOT LESS THAN 21'-0". TENDON POSITION SHALL TAKE PRECEDENCE IN CASE OF INTERFERENCE WITH REBAR, CONDUIT, OR OTHER ITEMS. TWISTING OR ENTWINING OF INDIVIDUAL WIRES OR STRANDS WITHIN A BUNDLE OR BEAM SHALL NOT BE PERMITTED. TENDON CONFLICTS WITH EMBED PLATES FOR CLADDING OR OTHER ITEMS SHALL BE BROUGHT TO THE ATTENTION OF THE ENGINEER PRIOR TO PLACING CONCRETE.

SHEATHING REPAIR: DAMAGED OR STRIPPED AREAS OF TENDON SHEATHING SHALL BE REPAIRED BY SPIRALLY WRAPPING AREAS WITH A POLYETHYLENE TAPE COMPATIBLE WITH THE TENDON SHEATHING. TAPE SHALL BE SPIRALLY WRAPPED TO PROVIDE A MINIMUM OF 2 LAYERS AT ALL LOCATIONS. DO NOT USE DUCT TAPE.

CONDUIT AND PIPE IN SLABS: CONTRACTOR SHALL SUBMIT SHOP DRAWINGS THREE WEEKS PRIOR TO PLACEMENT OF PIPE OR CONDUIT TO THE STRUCTURAL ENGINEER SHOWING SIZE, LOCATION, AND EXTENT OF ALL CONDUIT TO BE PLACED IN POST-TENSIONED CONCRETE. ENGINEER SHALL REVIEW DRAWINGS PRIOR TO PLACEMENT OF PIPE OR CONDUIT FOR IMPACT OF PLACEMENT ON STRUCTURAL INTEGRITY OF CONCRETE. ENGINEER SHALL VISUALLY REVIEW CONDUIT PLACEMENT IN SLAB A MINIMUM OF ONE DAY PRIOR TO PLACING CONCRETE. CONTRACTOR SHALL NOTIFY THE ENGINEER, WITH REASONABLE LEASD TIME, FOR THIS SITE VISIT.

CONDUIT OR PIPE EMBEDDED IN SLAB::

SHALL HAVE A MAXIMUM OUTSIDE DIAMETER OF 1/6 TIMES THE SLAB THICKNESS OR 2".
SHALL BE SPACED A MINIMUM OF 3 TIMES THE LARGEST CONDUIT OUTER DIAMETER APART.
SHALL BE LOCATED WITHIN THE MIDDLE THIRD OF THE SLAB DEPTH.
SHALL NOT BE STACKED AND SHALL CROSS AT A MINIMUM ANGLE OF 45 DEGREES.
SHALL NOT BE PLACED WITHIN 4'-0" OF COLUMN FACE
SHALL NOT BE PLACED WITHIN 1'-6" OF TENDON ANCHORS
SHALL BE PLACED A MINIMUM OF 2" CLEAR FROM TENDONS AT ALL LOCATIONS.

BLOCKOUTS: CONTRACTOR SHALL SUBMIT TO THE STRUCTURAL ENGINEER LOCATIONS AND SIZES OF ALL MECHANICAL, PLUMBING AND ELECTRICAL BLOCKOUTS LOCATED WITHIN THE POST-TENSIONED SLAB, AND NEAR ALL COLUMNS. SUBMITTAL SHALL OCCUR THREE WEEKS PRIOR TO PLACEMENT OF BLOCKOUTS.

FORMWORK SHALL BE CONSTRUCTED TO PERMIT MOVEMENT DURING APPLICATION OF THE POST-TENSIONING FORCE. FORMWORK SHALL BE DESIGNED TAKING INTO ACCOUNT POSSIBILITY OF LIFT-OFF DURING TENSIONING TRANSFERRING LOAD TO SUPPORT AREAS.

POST-TENSIONING REVIEW: FOLLOWING COMPLETION OF SPECIAL INSPECTION, A WALK-THROUGH WITH THE CONTRACTOR, SPECIAL INSPECTOR AND ENGINEER SHALL OCCUR. SHOP DRAWINGS, STAMPED BY AN ALASKA REGISTERED PROFESSIONAL ENGINEER, SHOWING LOCATIONS AND SIZES OF ALL REINFORCING, PENETRATIONS AND EMBEDDED ITEMS SHALL BE SUBMITTED AT LEAST TWO WEEKS PRIOR TO WALK-THROUGH. WALK-THROUGH SHALL BE COMPLETED A MINIMUM OF 4 HOURS PRIOR TO CONCRETE PLACEMENT.

TENDON FORCES: FORCES INDICATED ON THE DRAWINGS ARE FINAL EFFECTIVE FORCES. JACKING FORCE SHALL NOT EXCEED 33 KIPS PER TENDON. ANCHORING FORCE SHALL NOT EXCEED 28.9 KIPS PER TENDON. FINAL EFFECTIVE FORCE SHALL BE 26.8 KIPS PER TENDON. CONTRACTOR SHALL ACCOUNT FOR ALL LOSSES, INCLUDING ANCHORAGE, ELASTIC SHORTENING, CREEP, SHRINKAGE, RELAXATION, FRICTION AND WOBBLE.

TENSIONING SCHEDULE: TENSIONING MAY START ONCE CONCRETE HAS ATTAINED THE SPECIFIED 3-DAY COMPRESSIVE STRENGTH, BUT NO SOONER THAN 48 HOURS AFTER CONCRETE PLACEMENT. FIELD-CURED TEST CYLINDERS, TAKEN AND TESTED AT THE CONTRACTOR'S EXPENSE, SHALL BE USED TO SUBSTANTIATE CONCRETE STRENGTH. TENSIONING SHALL START NO LATER THAN 96 HOURS AFTER CONCRETE PLACEMENT. IF CONCRETE HAS NOT ATTAINED SPECIFIED STRENGTH WITHIN 96 HOURS OF PLACEMENT, APPLY 1/2 OF THE SPECIFIED JACKING STRESS TO EACH STRAND AT 96 HOURS, AND THE FULL SPECIFIED JACKING STRESS WHEN CONCRETE ATTAINS FULL STRENGTH.

TENSIONING PROCEDURE: TENSIONING SHALL BE DONE BY HYDRAULIC JACKS WITH CALIBRATED PRESSURE GAUGES UNDER IMMEDIATE CONTROL OF A PERSON EXPERIENCED IN THIS TYPE OF WORK. STRESS TENDONS IN THE FOLLOWING SEQUENCE:

1. TEMPERATURE TENDONS (WHERE SPECIFIED)
2. UNIFORMLY DISTRIBUTED TENDONS
3. BANDED OR BEAM TENDONS

TENSIONING INSPECTION: CONTINUOUS SPECIAL INSPECTION IS REQUIRED DURING TENSIONING. FIELD READINGS OF ELONGATIONS AND/OR STRESSING FORCES SHALL NOT VARY BY MORE THAN 7 PERCENT FROM THE REQUIRED VALUES. EXCEPT THAT TENDONS LESS THAN 50 FEET IN LENGTH SHALL NOT HAVE MEASURED ELONGATIONS DEVEITATING MORE THAN 1/4". A RECORD OF ALL JACKING FORCES, GAUGE PRESSURES, AND FIELD-MEASURED ELONGATIONS SHALL BE SUBMITTED TO THE ARCHITECT FOR REVIEW BY ENGINEER PRIOR TO TENDON FINISHING.

SHORING SHALL REMAIN IN PLACE UNTIL TENDONS ARE STRESSED AND REVIEW BY ENGINEER HAS BEEN COMPLETED. SHORING AT CLOSURE POURS SHALL REMAIN IN PLACE UNTIL CONCRETE IN THE CLOSURE POUR HAS ATTAINED SPECIFIED 28-DAY DESIGN STRENGTH.

ENCAPSULATED POST-TENSIONING ANCHORAGE SYSTEM

ALL TENDON ANCHORS SHALL BE ENCAPSULATED. ENCAPSULATED ANCHORAGE SYSTEM SHALL MEET ALL REQUIREMENTS BELOW AND THOSE OF PTI GUIDE SPECIFICATIONS FOR MONO-STRAND CORROSION PROTECTION SYSTEMS FOR AGGRESSIVE ENVIRONMENTS. ALL ANCHOR PLATES SHALL BE PLASTIC COATED, HAVE GREASE-FILLED CAPS THAT COVER THE CUT END OF THE TENDON, AND HAVE GREASE-FILLED TUBES OR TRUMPETS TO COVER EXPOSED CABLE ON THE SLAB-SIDE OF THE ANCHOR PLATE.

FIELD QUALITY CONTROL

1. ENCAPSULATED TENDONS SHALL NOT BE EXPOSED TO WEATHER FOR MORE THAN SEVEN (7) CALENDAR DAYS PRIOR TO CONCRETE PLACEMENT.
2. TENDON SHEATHING DAMAGED OVER MORE THAN TEN PERCENT OF THE LENGTH SHALL BE REJECTED. DAMAGED LENGTH NEED NOT BE CONTINUOUS.
3. BEFORE CONCRETE PLACEMENT AROUND SHEATHING, ALL TENDON DAMAGE SHALL BE REPAIRED TO WATERTIGHT CONDITION. REPAIRS SHALL BE ACCEPTABLE TO THE ENGINEER.
4. INSPECT SHEATHING FOR UNREPAIRED DAMAGE, FOR WATERTIGHT SEAL BETWEEN SHEATHING AND ANCHOR, AND FOR CORRECT INSTALLATION OF ANCHORS, BEFORE CONCRETE IS PLACED.
5. RELATIVE WEDGE EMBEDMENT SHALL NOT EXCEED 1/8 INCH.

PROTECTION

1. AFTER RECEIVING AUTHORIZATION FROM THE ENGINEER, AS DESCRIBED IN THE NOTES ABOVE, THE TENDON TAILS SHALL BE CUT AND THE EXPOSED TENDON END AND CHUCKS SHALL BE MADE WATER-TIGHT BY COVERING WITH GREASE-FILLED TENDON CAP AS SOON AS TENDONS ARE COOL TO THE TOUCH. CUTTING OF TENDONS AND INSTALLATION OF GREASE CAPS SHALL BE WITNESSED BY THE SPECIAL INSPECTOR. TENDON LENGTH BEYOND WEDGES SHALL BE 3/4" + / - 1/4".
2. AFTER SEALING EXPOSED END OF TENDONS AND CHUCKS, AND BEFORE GROUTING TENDON POCKET, COAT POCKET WITH BONDING AGENT. PREPARE SURFACE PER MANUFACTURERS INSTRUCTIONS.
3. GROUT TENDON POCKETS SOLID WITH NON-SHRINK, ONO-STAIN, CHLORIDE FREE GROUT SUCH AS MASTERFLOW 816 OR TARGET PORTLAND EXPANDING GROUT.

INSERTS AND SLEEVES SHALL BE CAST-IN-PLACE WHENEVER POSSIBLE. DRILLED AND POWER-DRIVEN FASTENERS WILL BE PERMITTED ONLY WHEN IT CAN BE SHOWN THAT THE INSERTS WILL NOT SPALL THE CONCRETE AND ARE LOCATED TO AVOID THE TENDONS. CONTRACTOR MUST MARK TENDON LOCATIONS ON THE CONCRETE WHEN DRILLED OR POWER-DRIVEN FASTENERS ARE ANTICIPATED.

RECORD DRAWING
THESE RECORD DRAWINGS HAVE BEEN PREPARED FROM CONTRACTOR FURNISHED INFORMATION. THERE IS NO GUARANTEE AS TO THE ACCURACY OR COMPLETENESS OF THE INFORMATION CONTAINED HEREIN. RMI WAS NOT RETAINED TO VERIFY THE FIELD CONDITIONS.
COURTNEY WILLOUGHBY
DATE: 12/24/18
REID MIDDLETON INC.

KUMIN
ARCHITECTURE INTERIORS PLANNING
808 E STREET, STE 200 ANCHORAGE, AK 99501
T 907 272.8833 KUMINALASKA.COM

NEESER CONSTRUCTION, INC.

Reid Middleton
4300 B St., Suite 302 Anchorage, AK 99503
Phone: 907 562-3439 - www.reidmiddleton.com
Corporate License #AECC598
© Copyright Reid Middleton, Inc. 2017

Childrens Dental Clinic Building
4441 Diplomacy Drive, Anchorage AK 99508
Southcentral Foundation

No.	Description	Date

Drawn By: RLC	Checked By: SES
Date: 24 DEC 2018	
Phase: RECORD DRAWINGS	
Job No: 402016.015	
SHEET TITLE: GENERAL NOTES	
SHEET NO: SP102	

C:\Users\gbaginski\Documents\SCF CDC Garage_Structural RECORD DWGS_2015_gbaginski.rvt
12/21/2018 3:46:36 PM

RECORD DRAWINGS

GENERAL STRUCTURAL NOTES

STEEL

REFERENCE STANDARDS: STRUCTURAL STEEL SHALL CONFORM TO ALL REQUIREMENTS OF THE FOLLOWING DOCUMENTS:

AISC 360	"SPECIFICATION FOR STRUCTURAL STEEL BUILDINGS"
AISC 341	"SEISMIC PROVISIONS FOR STRUCTURAL STEEL BUILDINGS"
AISC 303	"CODE OF STANDARD PRACTICE FOR STEEL BUILDINGS AND BRIDGES"
AWS D1.1	"STRUCTURAL WELDING CODE - STEEL"
AISC 348	"SPECIFICATION FOR STRUCTURAL JOINTS USING ASTM A325 OR A490 BOLTS"
AISC 358	"PREQUALIFIED CONNECTIONS FOR SPECIAL AND INTERMEDIATE STEEL MOMENT FRAMES FOR SEISMIC APPLICATIONS"

MATERIALS

TYPE OF MEMBER	ASTM SPECIFICATION	YIELD
WIDE FLANGES	A992	50 KSI
PLATES, ANGLES, CHANNELS AND BARS	A36	36 KSI
SPECIAL SHAPES (NOTED GRADE 50 ON DRAWINGS)	A572	50 KSI
STEEL PIPES	A53 (TYPE E OR S, GRADE B)	35 KSI
STRUCTURAL TUBES (HSS)	A500 (GRADE B)	46 KSI
MACHINE BOLTS (MB) AND THREADED RODS (TR)	A307	
CONNECTION BOLTS (HSB)	A325	
ANCHOR RODS (AR)	F1554, GRADE 36	
TENSION CONTROL BOLTS	F1852	
LOAD-INDICATING WASHERS	F959, TYPE A325	

CAMBER: ALL MEMBERS SHALL BE ERECTED WITH NATURAL OR INDUCED CAMBER UPWARDS, UNLESS NOTED OTHERWISE. CAMBER INDICATED ON DRAWINGS SHALL BE AS DELIVERED TO THE JOB SITE. CONTRACTOR SHALL CONSIDER CAMBER LOSS DUE TO SHIPPING AND HANDLING. CONTRACTOR SHALL BE RESPONSIBLE FOR ALL ERECTION AIDS INCLUDING ERECTION ANGLES AND LIFT HOLES.

STRUCTURAL STEEL EXPOSED TO WEATHER SHALL BE ZINC-COATED HOT-DIPPED GALVANIZED PER ASTM A123. ALL FIELD WELDS EXPOSED TO WEATHER SHALL BE COATED WITH BRUSH APPLIED PAINT CONTAINING ZINC DUST COMPLYING WITH ASTM A780. ALL BOLTS AND ANCHOR RODS EXPOSED TO WEATHER SHALL BE ZINC-COATED HOT-DIPPED GALVANIZED PER ASTM A153.

BOLTED CONNECTIONS NOT SPECIFIED AS SLIP-CRITICAL NEED ONLY BE TIGHTENED TO AISC SNUG-TIGHT CRITERIA, UNLESS NOTED OTHERWISE. CONNECTION PLATES SHALL HAVE AISC STANDARD ROUND HOLES UNLESS NOTED OTHERWISE. ALL OVERSIZED OR SLOTTED HOLES SHALL HAVE WASHERS PROVIDED IN ACCORDANCE WITH AISC 360, UNLESS NOTED OTHERWISE.

PRETENSIONED OR SLIP-CRITICAL CONNECTIONS SHALL USE LOAD-INDICATING WASHERS OR TENSION CONTROL BOLTS SUCH AS BETHLEHEM INDICATOR BOLTS, LeJEUNE TENSION CONTROL BOLTS, ETC. CONNECTED PLIES SHALL BE PREPARED TO MEET THE REQUIREMENTS FOR CLASS A FAYING SURFACES.

WELDING: ALL WELDS SHALL COMPLY WITH AWS D1.1. WELDS SHALL BE MADE USING LOW HYDROGEN E70XX ELECTRODES. ONLY AWS PREQUALIFIED WELDED JOINTS SHALL BE USED. SHOP DRAWINGS SHALL SHOW ALL WELDING WITH AWS A2.4 STANDARD SYMBOLS. WELDS SHOWN ON DRAWINGS ARE MINIMUM SIZES. INCREASE WELD SIZE TO AWS MINIMUM SIZES BASED ON PLATE THICKNESS.

WELDS SHOWN ON DRAWINGS ARE FOR FINAL CONNECTIONS. UNLESS FIELD WELD SYMBOLS ARE SHOWN, CONTRACTOR SHALL BE RESPONSIBLE FOR DETERMINING IF A WELD SHOULD BE SHOP OR FIELD WELDED IN ORDER TO FACILITATE STEEL ERECTION. CONTRACTOR SHALL BE RESPONSIBLE FOR ALL JOINT PREPARATIONS AND WELDING PROCEDURES, INCLUDING ROOT OPENINGS AND FACE DIMENSIONS, GROOVE ANGLES, BACKING BARS, COPES, TAPERS, AND SURFACE ROUGHNESS.

WELDER CERTIFICATION: AWS

FIREPROOFING: REFER TO SPECIFICATIONS FOR REQUIRED FIREPROOFING AND TO ARCHITECTURAL DRAWINGS FOR REQUIRED FIRE RESISTANCE RATINGS. STRUCTURAL FRAME CONSISTS OF THE COLUMNS; THE GIRDERS, BEAMS, TRUSSES, AND SPANDRELS HAVING DIRECT CONNECTIONS TO THE COLUMNS; AND BRACING MEMBERS DESIGNED TO CARRY GRAVITY LOADS.

ANCHOR RODS SHALL BE INSTALLED TO AISC SNUG-TIGHT CRITERIA WITH HEX NUTS AND LOCK WASHERS OR JAM NUTS AT THE TOP. AT THE BOTTOM, PROVIDE A STANDARD SIZE HEAD, TACK-WELDED NUT OR DOUBLE NUT. NO HEATING OR BENDING OF ANCHOR RODS IS PERMITTED. ENLARGEMENT OF ANCHOR ROD HOLES BY BURNING IS NOT PERMITTED. BASE PLATE HOLES FOR ANCHOR RODS SHALL BE AS SHOWN BELOW

AR DIAMETER	MAXIMUM HOLE DIAMETER	MINIMUM WASHER DIAMETER	MINIMUM WASHER THICKNESS
5/8"	1 1/16"	1 1/2"	3/16"
3/4"	1 5/16"	2"	1/4"
7/8"	1 9/16"	2 1/2"	5/16"
1"	1 13/16"	3"	3/8"

STEEL DECK SIZE, TYPE, GAGE, AND ATTACHEMENTS SHALL BE PROVIDED AS INDICATED IN THE DRAWINGS. STEEL DECK SHALL CONFORM TO THE REQUIREMENTS OF THE STEEL DECK INSTITUTE. CEILINGS, LIGHT FIXTURES, DUCTS, AND OTHER ITEMS SHALL NOT BE SUSPENDED FROM NON-COMPOSITE DECKS. STEEL DECK GAGES SHOWN ON THE DRAWINGS ARE BASED ON UNSHORED CONDITIONS. HEAVIER DECK GAGES MAY BE REQUIRED FOR SOME SPECIAL CONDITIONS. DECK SUPPLIER SHALL VERIFY DECK CAPACITY BASED ON ACTUAL DECK LAYOUT AND SPAN CONDITIONS. CONTRACTOR SHALL PROVIDE CLOSURE PLATES, FLASHING, AND ALL MISCELLANEOUS LIGHT GAGE METAL NECESSARY TO COMPLETE THE WORK.

WELDED HEADED STUDS (WHS) AND DEFORMED BAR ANCHORS (DBA): STUDS SHALL BE HEADED STUDS COMPLYING WITH ASTM A108 WITH MINIMUM TENSILE STRENGTH OF 60 KSI. DEFORMED BAR ANCHORS SHALL COMPLY WITH ASTM A496. STUDS AND DEFORMED BAR ANCHORS SHALL BE AUTOMATICALLY END WELDED WITH EQUIPMENT RECOMMENDED BY THE MANUFACTURER. LENGTHS SHOWN ON DRAWINGS ARE FINAL LENGTHS AFTER WELDING.

DIMENSIONAL TOLERANCE FOR STRUCTURAL STEEL MEMBERS SHALL BE PER THE AISC CODE OF STANDARD PRACTICE FOR STEEL BUILDINGS AND BRIDGES, SECTION 6.4 AND ASTM SPECIFICATION A6. UNLESS SPECIFICALLY ALLOWED BY THE ENGINEER, COLUMN MEMBERS SHALL NOT BE MODIFIED BY THE ROTARY STRAIGHTENING PROCESS.

ARCHITECTURALLY EXPOSED STRUCTURAL STEEL: ANY STRUCTURAL STEEL THAT IS EXPOSED TO VIEW UPON COMPLETION OF THE PROJECT SHALL COMPLY WITH SECTION 10 OF AISC 303. SEE SPECIFICATIONS FOR SPECIFIC FABRICATION AND ERECTION REQUIREMENTS FOR ARCHITECTURALLY EXPOSED STRUCTURAL STEEL.

COLD-FORMED STEEL FRAMING SHALL COMPLY WITH ASTM A653, TYPE SS, GRADE 33, UNLESS NOTED OTHERWISE. FOR SIZES SHOWN ON DRAWINGS, REFER TO STEEL STUD MANUFACTURER'S ASSOCIATION STANDARAD SPECIFICATION. ALL COLD-FORMED FRAMING SHALL ALSO CONFORM TO THE A.I.S.I. "SPECIFICATION FOR THE DESIGN OF COLD-FORMED STEEL STRUCTURAL MEMBERS." ALL STUDS, TRACKS, AND JOISTS SHALL BE GALVANIZED PER ASTM A924, G60. FASTENINGS NOT SHOWN ON DRAWINGS SHALL BE AS RECOMMENDED BY THE MANUFACTURER.

SPECIAL INSPECTION SCHEDULE

ITEM	TBC	CI	PI	REFERENCE STANDARD	IBC 2012 REFERENCE	REMARK
GENERAL:						
PREFABRICATION OF STRUCTURAL LOAD-BEARING MEMBERS & ASSEMBLIES			X		1704.2.5.1	PREFABRICATED ITEMS SHALL HAVE THE SAME INSPECTION REQUIREMENTS AS OUTLINED IN THE STRUCTURAL INSPECTION SCHEDULE UNLESS APPROVED BY THE BUILDING OFFICAL.
SITE PREPARATION, FILL PLACEMENT, SOIL COMPACTION		X			1705.6	PER GEOTECHNICAL REPORT
SPRAYED FIRE-RESISTANT MATERIALS		X			1705.13	SEE ARCHITECTURAL DRAWINGS
MASTIC AND INTUMESCENT FIRE-RESISTANT COATING		X			1705.14	SEE ARCHITECTURAL DRAWINGS
CONCRETE:						
REINFORCEMENT			X	ACI 318 3.5, 7.1-7.7	1910.4	
WELDING OF REINFORCING BARS				AWS D1.4, ACI 318 3.5.2		
MECHANICAL SPLICES OF REINFORCEMENT					1705.1.1	PER EVALUATION REPORT
ANCHOR RODS, EMBEDDED BOLTS AND INSERTS		X		ACI 318 8.1.3, 21.2.8	1908.1, 1909.1	PRIOR TO & DURING CONCRETE PLACEMENT
ANCHORS			X	ACI 318 3.8.6, 8.1.3, 21.2.8		IN HARDENED CONCRETE
USE OF REQUIRED DESIGN MIX			X	ACI 318: CH.4, 5.2-5.4	1904.2, 1910.2, 1910.3	
CONCRETE SLUMP, AIR CONTENT AND TEMPERATURE	X	X		ASTM C172, C31, ACI 318 5.6, 5.8	1910.10	PROVIDE TESTS ONCE EVERY 150 CUBIC YARDS, OR EACH 5,000 SQUARE FEET OF SLABS OR WALLS, BUT AT LEAST ONCE A DAY DURING PLACEMENT. SEE NOTE 5.
CONCRETE PLACEMENT		X		ACI 318 5.9, 5.10	1910.6-1910.8	
CONCRETE CURING	X		X	ACI 318 5.11-5.13	1910.9	
IN-SITU CONCRETE STRENGTH FOR FORM REMOVAL OR POST-TENSIONING			X	ACI 318 6.2		
APPLICATION OF PRESTRESSING FORCES		X		ACI 318 18.20		
POST-INSTALLED ANCHORS			X		1909.1	PER EVALUATION REPORT
COLUMN BASE PLATE GROUT	X	X				
STEEL:						
HIGH-STRENGTH BOLTS, NUTS, AND WASHERS			X	ASTM AS NOTED, AISC 360 A3.3		ID MARKS, MFR CERTIFICATION OF COMPLIANCE
HIGH-STRENGTH BOLTING:						
BEARING TYPE CONNECTIONS			X	AISC 360 M2.5	1705.2	
SLIP-CRITICAL CONNECTIONS				AISC 360 M2.5	1705.2	
STRUCTURAL STEEL MATERIALS				ASTM A6, A568, AS NOTED		
WELD FILLER MATERIALS				AISC 360 A3.5		ID MARKS, MFR CERT MILL TEST REPORTS
WELDING:						ID MARKS, MFR CERTIFICATION OF COMPLIANCE
CJP & PJP GROOVE WELDS		X		AWS D1.1	1705.2.2.1	
MULTI-PASS FILLET WELDS		X		AWS D1.1	1705.2.2.1	
SINGLE PASS FILLET WELDS > 5/16"		X			1705.2.2.1	
SINGLE PASS FILLET WELDS ≤ 5/16"			X		1705.2.2.1	
FLOOR & ROOF DECK WELDS			X	AWS D1.3		
COLD-FORMED-STEEL FRAMING			X	AWS D1.3		
DIAPHRAGM WELDED STUDS			X			
STAIRS & RAILINGS			X			

INSPECTION SCHEDULE NOTES:

1. ITEMS MARKED WITH AN "X" INDICATE WHETHER THE INSPECTION IS CONTINUOUS OR PERIODIC AS DEFINED IN IBC SECTION 1702.1. FOR ITEMS NOT MARKED WITH AN "X", COMPLY WITH IBC CHAPTER 17.
2. CI = CONTINUOUS INSPECTION.
3. PI = PERIODIC INSPECTION.
4. TBC = TESTING BY CONTRACTOR TO BE OBSERVED BY SPECIAL INSPECTOR.
5. WHEN TOTAL QUANTITY OF A GIVEN CLASS OF CONCRETE IS LESS THAN 5 CUBIC YARDS, STRENGTHEN TESTS ARE NOT REQUIRED.

RECORD DRAWING

THESE RECORD DRAWINGS HAVE BEEN PREPARED FROM CONTRACTOR FURNISHED INFORMATION. THERE IS NO GUARANTEE AS TO THE ACCURACY OR COMPLETENESS OF THE INFORMATION CONTAINED HEREIN. RMI WAS NOT RETAINED TO VERIFY THE FIELD CONDITIONS.

COURTNEY WILLOUGHBY
DATE: 12/24/18
REID MIDDLETON INC.

KUMIN
ARCHITECTURE INTERIORS PLANNING
808 E STREET, STE 200 ANCHORAGE, AK 99501
T 907 272.8833 KUMINALASKA.COM

NEESER CONSTRUCTION, INC.

Reid Middleton
4300 B St., Suite 302 Anchorage, AK 99503
Phone: 907 562-3439 - www.reidmiddleton.com
Corporate License #AECC598
© Copyright Reid Middleton, Inc. 2017

Childrens Dental Clinic Building
4441 Diplomacy Drive, Anchorage AK 99508
Southcentral Foundation

No.	Description	Date

Drawn By: RLC
Checked By: SES
Date: 24 DEC 2018
Phase: RECORD DRAWINGS
Job No: 402016.015
SHEET TITLE: GENERAL NOTES
SHEET NO: SP103

C:\Users\gbaginski\Documents\SCF CDC Garage_Structural RECORD DWGS_2015_gbaginski.rvt
12/21/2018 3:46:39 PM

ABBREVIATIONS

&	AND
@	AT
AB	ANCHOR BOLT
ACI	AMERICAN CONCRETE INSTITUTE
ADDL	ADDITIONAL
ADJ	ADJACENT, ADJUSTABLE
AISC	AMERICAN INSTITUTE OF STEEL CONSTRUCTION
AISI	AMERICAN IRON AND STEEL INSTITUTE
ALT	ALTERNATE
ANCH	ANCHOR
APA	AMERICAN PLYWOOD ASSOCIATION
APPROX	APPROXIMATE
AR	ANCHOR ROD
ARCH	ARCHITECT, ARCHITECTURAL
ASCE	AMERICAN SOCIETY OF CIVIL ENGINEERS
ASTM	AMERICAN SOCIETY FOR TESTING AND MATERIALS
AWS	AMERICAN WELDING SOCIETY
B/	BOTTOM OF
BAL	BALANCE
BC	BOTTOM CHORD
BF	BRACED FRAME
BLDG	BUILDING
BLKG	BLOCKING
BM	BEAM
BOF	BOTTOM OF FOOTING
BOT	BOTTOM
BP, B PL	BASE PLATE
BRG	BEARING
BTWN	BETWEEN
BU	BUILT-UP
C	CAMBER, CHANNEL
CA	CONCRETE (EXPANSION) ANCHOR
CANTIL	CANTILEVER
CAP	CAPACITY
CC	CENTER-TO-CENTER
CDF	CONTROL DENSITY FILL
CG	CENTER OF GRAVITY
CIP	CAST-IN-PLACE
CJ	CONTROL JOINT, CONSTRUCTION JOINT
CJP, CP	COMPLETE JOINT PENETRATION
CL	CENTERLINE
CLR	CLEAR
CMU	CONCRETE MASONRY UNIT
COL	COLUMN
CONC	CONCRETE
CONN	CONNECTION
CONST	CONSTRUCTION
CONT	CONTINUE, CONTINUOUS
CONTR	CONTRACTOR
COORD	COORDINATE
CRSI	CONCRETE REINFORCED STEEL INSTITUTE
CTR	CENTER, CENTERED
CU YD	CUBIC YARD
d	PENNYWEIGHT (NAILS)
DB	DIVIDER BEAM, DROPPED BEAM
D-B	DESIGN-BUILD
DBA	DEFORMED BAR ANCHOR
DBL	DOUBLE
DEG, °	DEGREE
DEMO	DEMOLISH, DEMOLITION
DET	DETAIL
DF	DOUGLAS FIR
DIA	DIAMETER
DIAG	DIAGONAL
DIAPH	DIAPHRAGM
DICA	DRILLED-IN CONCRETE ANCHOR
DIM	DIMENSION
DIST	DISTANCE
DL	DEAD LOAD
DN	DOWN
DO	DITTO
DP	DEEP
DS	DRAG STRUT
DWG	DRAWING
DWL	DOWEL
(E), EXIST	EXISTING
EA	EACH, EPOXY (ADHESIVE) ANCHOR
EE	EACH END
EF	EACH FACE
EJ	EXPANSION JOINT
EL	ELEVATION
ELEC	ELECTRICAL
ELEV	ELEVATOR
EMBED	EMBEDMENT
ENGR	ENGINEER
EQ	EARTHQUAKE, EQUAL
EQUIP	EQUIPMENT
ES	EACH SIDE
ETC	ET CETERA
E-W	EAST-WEST
EW	EACH WAY
EXP	EXPANSION
EXT	EXTERIOR
EXT GR	EXTERIOR GRADE
FD	FLOOR DRAIN
FDN	FOUNDATION
FEMA	FEDERAL EMERGENCY MANAGEMENT AGENCY
FF	FAR FACE, FINISH FLOOR
FIN	FINISH
FLR	FLOOR
FLG	FLANGE
FS	FAR SIDE
FT, '	FEET
FTG	FOOTING
GA	GAGE, GAUGE
GALV	GALVANIZED
GB, GR BM	GRADE BEAM
GEN	GENERAL
GL, GLU LAM	GLUE LAMINATED WOOD
GLB	GLUE LAMINATED BEAM
GRD	GIRDER
GRND	GROUND
HDR	HEADER
HGR	HANGER
HK	HOOK
HD	HOLD DOWN
HP	HIGH POINT
HT	HEIGHT
HORIZ	HORIZONTAL
HPT	HIGH POINT
HSB	HIGH STRENGTH BOLT
HSS	HOLLOW STRUCTURAL SECTION
IBC	INTERNATIONAL BUILDING CODE
ID	INSIDE DIAMETER
I.F.	INSIDE FACE
IN, "	INCH
INCL	INCLUDE
INFO	INFORMATION
INT	INTERIOR
IJ	ISOLATION JOINT
JST	JOIST
JT	JOINT
K	KIP (1,000 LB)
KSF	KIPS PER SQUARE FOOT
KSI	KIPS PER SQUARE INCH
L	LENGTH, ANGLE
LB, #	POUND
LEV	LEVEL
LF	LINEAL FOOT
LL	LIVE LOAD
LP	LOW POINT
LLBB	LONG LEGS BACK TO BACK
LLH	LONG LEG HORIZONTAL
LLV	LONG LEG VERTICAL
LOC	LOCATION, LOCATE
LONGIT	LONGITUDINAL
LPT	LOW POINT
LSH	LONG SLOTTED HOLE
LSL	LAMINATED STRAND LUMBER
LVL	LAMINATED VENEER LUMBER
MATL	MATERIAL
MAX	MAXIMUM
MB	MACHINE BOLT
MECH	MECHANICAL
MF	MOMENT FRAME
MFR	MANUFACTURER
MIN	MINIMUM
MISC	MISCELLANEOUS
MPH	MILES PER HOUR
MTL	METAL
N/A	NOT APPLICABLE
NF	NEAR FACE
NIC	NOT IN CONTRACT
NLG	NAILING
NOM	NOMINAL
NO, #	NUMBER
N-S	NORTH-SOUTH
NS	NEAR SIDE
NTS	NOT TO SCALE
OC	ON CENTER
OD	OUTSIDE DIAMETER
O.F.	OUTSIDE FACE
OPNG	OPENING
OPP	OPPOSITE
OSH	OVERSIZED HOLE
OWJ	OPEN WEB JOIST
PA	POWDER ACTUATED
PCC	PRECAST CONCRETE
PCF	POUNDS PER CUBIC FOOT
PEN	PENETRATION
PERP	PERPENDICULAR
PL	PLATE, PROPERTY LINE
PLCS	PLACES
PLF	POUNDS PER LINEAR FOOT
PLWD	PLYWOOD
PNL	PANEL
PP, PJP	PARTIAL JOINT PENETRATION
PRCST	PRECAST
PREFAB	PREFABRICATED
PS	PRESTRESSED CONCRETE
PSF	POUNDS PER SQUARE FOOT
PSI	POUNDS PER SQUARE INCH
PSL	PARALLEL STRAND LUMBER
PT	POINT, PRESSURE TREATED
P-T	POST-TENSIONED
PVC	POLYVINYL CHLORIDE
R, RAD	RADIUS
RD	ROOF DRAIN
REBAR	REINFORCING STEEL BARS
REF	REFERENCE
REINF	REINFORCING
REM	REMAINDER
REQD	REQUIRED
RTN	RETURN
SCHED	SCHEDULE
SECT	SECTION
SHT	SHEET
SHTHG	SHEATHING
SIM	SIMILAR
SJI	STEEL JOIST INSTITUTE
SOG	SLAB ON GRADE
SPC	SPACE, SPACED, SPACING
SPEC	SPECIFICATION
SQ	SQUARE
SST	STAINLESS STEEL
SSH	SHORT SLOTTED HOLE
STAG	STAGGER, STAGGERED
STD	STANDARD
STIF	STIFFENER
STIR	STIRRUP
STL	STEEL
STRUCT	STRUCTURAL
SPRT	SUPPORT
SW	SHEAR WALL
SWS	SHEAR WALL SCHEDULE
SYMM	SYMMETRICAL, SYMMETRY
T/	TOP OF
T&B	TOP AND BOTTOM
T&G	TONGUE AND GROOVE
TC	TOP CHORD
TBD	TO BE DETERMINED
TEMP	TEMPERATURE
THK	THICK, THICKNESS
THP	TENDON HIGH POINT
THRU	THROUGH
TOC	TOP OF CONCRETE
TOF	TOP OF FOOTING
TOS	TOP OF STEEL
TOW	TOP OF WALL
TR	THREADED ROD
TRANS	TRANSVERSE
TYP	TYPICAL
TWS	THREADED WELDED STUD
UBC	UNIFORM BUILDING CODE
UNO	UNLESS NOTED OTHERWISE
VERT	VERTICAL
W	WIDTH, WIDE FLANGE
W/	WITH
WD	WOOD
WHS	WELDED HEADED STUD
WIJ	WOOD I-JOIST
W/O	WITHOUT
WP	WORK POINT
WT	WEIGHT
WWR	WELDED WIRE REINFORCEMENT

PLAN NOTES AND LEGENDS

FOUNDATION PLAN NOTES:

1. WHERE NOTED SLAB-ON-GRADE SHALL BE 4" THICK WITH #4 @ 12" ON CENTER EACH WAY, MID-DEPTH, UNLESS NOTED OTHERWISE. PROVIDE VAPOR BARRIER PER ARCHITECTURAL BELOW SLAB AT INTERIOR SPACES OVER 6" OF FREE-DRAINING GRANULAR FILL PER GEOTECHNICAL REPORT.

   SEE ARCHITECTURAL DRAWINGS FOR SLAB DEPRESSION AND SLOPE REQUIREMENTS.

2. BOTTOM OF ALL FOOTINGS ON FOUNDATION PLAN SHALL BE AS NOTED. OVER EXCAVATE AND PLACE SUITABLE COMPACTED FILL AS DIRECTED BY OWNER-APPOINTED GEOTECHNICAL ENGINEER WHERE REQUIRED.
3. SEE ARCHITECTURAL / MECHANICAL / CIVIL / UTILITIES DRAWINGS FOR UNDERSLAB PIPING. COORDINATE FOUNDATION DEPTHS AND PIPING IN ACCORDANCE WITH 10/SP501.
4. FOOTINGS SPECIFICALLY NOTED ON GRID P8 ARE SIZED FOR A MAXIMUM OF 2 TIMES THE ACTUAL SUPPORTED GRAVITY LOADS TO ALLOW FOR FUTURE COLUMN PLACEMENT. THE DESIGN OF THE ADJACENT STRUCTURE EAST OF GRID P8 HAS NOT BEEN DEVELOPED AT THIS TIME.
5. IN BASEMENT WALLS PROVIDE CONTROL JOINTS WHERE INDICATED ON PLAN WITH SMOOTH DOWELS CENTERED IN WALL TO MATCH OUTSIDE FACE HORIZONTAL REINFORCEMENT.

FLOOR PLAN NOTES:

1. TOP OF SLAB ELEVATION, SLAB THICKNESS AND REINFORCING SHALL BE AS NOTED ON PLAN. VERIFY DIMENSIONS, SLOPES AND ELEVATIONS WITH ARCHITECTURAL DRAWINGS.
2. SLAB IS DESIGNED FOR 2-HOUR FIRE SEPARATION. PROVIDE THE FOLLOWING MINIMUM CONCRETE COVER:

   TOP OF SLAB: 2" COVER TO MILD REINFORCING AND P.T. TENDONS.
   EXTERIOR SPAN, BOTTOM OF SLAB: 1" COVER TO MILD REINFORCING, 1 3/4" CLEAR TO P.T. TENDONS.
   INTERIOR SPAN, BOTTOM OF SLAB: 1" COVER TO MILD REINFORCING AND P.T. TENDONS.

3. MECHANICAL PIPING, ELECTRICAL FIXTURES, AND OTHER HEAVY LOADS HUNG FROM PT SLAB SHALL BE SUPPORTED WITH CONCRETE INSERTS.
4. CORE DRILLING OR ROTO-HAMMERING OF PT SLAB IS NOT PERMITTED WITHOUT ENGINEER APPROVAL. SEE TYPICAL POST-TENSIONING NOTES.
5. PROVIDE (3) #4 TOP AND BOTTOM CONTINUOUS (SEE DETAIL 12/SP510 FOR PLACEMENT) ALONG PERIMETER OF SLAB WHERE NOTED ON PLAN. BARS ARE IN ADDITION TO (2) #4 EDGE BARS SHOWN IN DETAIL 12/SP510 AND ON PLAN. (3) #4 TOP AND BOTTOM ARE NOT REQUIRED WHERE CONCRETE SHEAR WALL REINFORCING OF DETAIL 3/SP511 IS REQUIRED.
6. SEE SP510 & SP511 FOR TYPICAL POST-TENSIONING DETAILS, INCLUDING ADDITIONAL REQUIRED REINFORCING.
7. TYPICAL DECK SLAB AT STAIR AND ELEVATOR LOBBY CONSISTS OF 3" METAL DECK WITH 3" CONCRETE COVER PER 4/SP602.
8. DECK SLAB AT SKY BRIDGE CONSISTS OF 2" METAL DECK WITH 2 1/2" CONCRETE COVER PER 8/SP602.
9. SEE DETAIL SHEET SP607 FOR TYPICAL STAIR FRAMING DETAILS.

FOUNDATION LEGEND

Symbol	Description
	CONCRETE WALL THIS LEVEL
	CONCRETE WALL BELOW THIS LEVEL
	CONCRETE COLUMN THIS LEVEL
	CONCRETE COLUMN BELOW THIS LEVEL
	HSS COLUMN THIS LEVEL
CX-X	COLUMN TYPE PER SCHEDULE 10/SP505
FX	FOOTING MARK PER SCHEDULE 12/SP501
x'-xx"	BOTTOM OF FOOTING ELEVATION
HIGH / LOW	STEP IN FOOTING ELEVATION
CJ	CONTROL JOINT IN CONCRETE WALL PER FOUNDATION NOTE 5
Cx	COLUMN PER SCHEDULE 10/SP505
	SLOPE DIRECTION

FLOOR LEGEND

Symbol	Description
	HSS COLUMN THIS LEVEL
	COLUMN BELOW THIS LEVEL
[X'-X"]	TOP OF STEEL ELEVATION
XDLE	EMBEDDED PLATE CONNECTION PER 12/SP601
C = X"	AMOUNT OF CAMBER REQUIRED AT BEAM MID SPAN
(X)	NUMBER OF SHEAR STUDS
[H] AND [L]	INDICATES FRAMING HIGH [H] AND LOW [L]
	HIGH LOAD CONNECTION PER 10/SP601
	CLOSURE POUR STRIP PER 12/SP511
B - X	BEAM MARK PER ELEVATIONS OF SP512
	STRESSING END OF PT STRAND
	ANCHOR END OF PT STRAND
xx"	TENDON HEIGHT FROM BOTTOM OF SLAB LOW POINT
xx"	TENDON HEIGHT FROM BOTTOM OF SLAB HIGH POINT

(5) 5 B 12
- QUANTITY (WHERE SPECIFIED)
- BAR SIZE
- "T" TOP BAR, "M" MIDDLE BAR, "B" BOTTOM BAR
- @ SPACING ON CENTER (EQUAL SPACE IF NOT SPECIFIED)

RECORD DRAWING

THESE RECORD DRAWINGS HAVE BEEN PREPARED FROM CONTRACTOR FURNISHED INFORMATION. THERE IS NO GUARANTEE AS TO THE ACCURACY OR COMPLETENESS OF THE INFORMATION CONTAINED HEREIN. RMI WAS NOT RETAINED TO VERIFY THE FIELD CONDITIONS.

COURTNEY WILLOUGHBY
DATE: 12/24/18
REID MIDDLETON INC.

KUMIN
ARCHITECTURE INTERIORS PLANNING
808 E STREET, STE 200 ANCHORAGE, AK 99501
T 907 272.8833 KUMINALASKA.COM

NEESER CONSTRUCTION, INC.

ReidMiddleton
4300 B St., Suite 302 Anchorage, AK 99503
Phone: 907 562-3439 - www.reidmiddleton.com
Corporate License #AECC598
© Copyright Reid Middleton, Inc. 2017

Childrens Dental Clinic Building
4441 Diplomacy Drive, Anchorage AK 99508
Southcentral Foundation

No.	Description	Date

Drawn By: RLC
Checked By: SES
Date: 24 DEC 2018
Phase: RECORD DRAWINGS
Job No: 402016.015
SHEET TITLE: ABBREVIATIONS, PLAN NOTES AND LEGENDS
SHEET NO: SP104

RECORD DRAWINGS

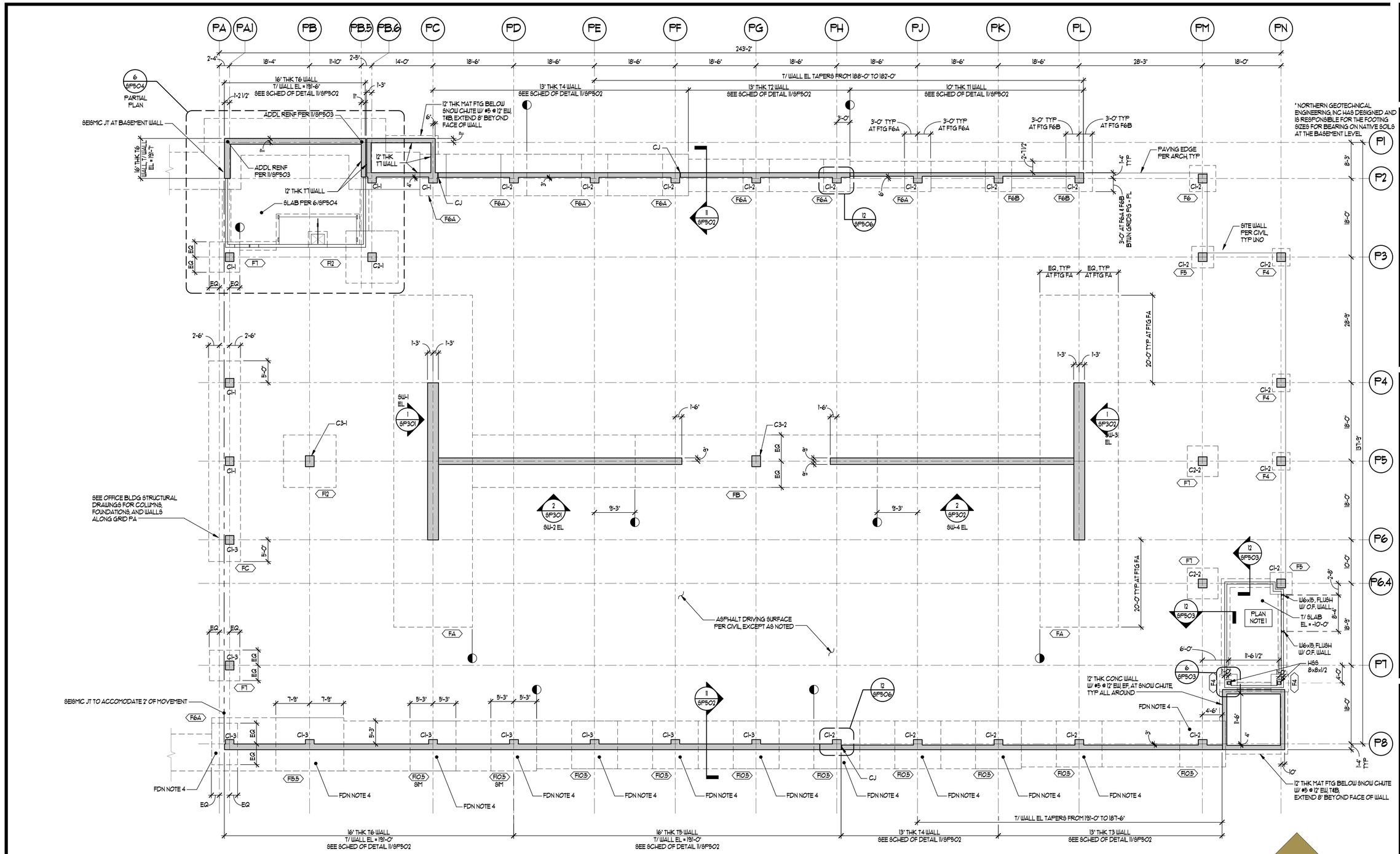

FOR FOUNDATION PLAN NOTES AND LEGEND SEE SP104

PARKING STRUCTURE PLAN - FOUNDATION PLAN LEVEL P0

3/32" = 1'-0"

* NORTHERN GEOTECHNICAL ENGINEERING, INC HAS DESIGNED AND IS RESPONSIBLE FOR THE FOOTING SIZES FOR BEARING ON NATIVE SOILS AT THE BASEMENT LEVEL.

RECORD DRAWING

THESE RECORD DRAWINGS HAVE BEEN PREPARED FROM CONTRACTOR FURNISHED INFORMATION. THERE IS NO GUARANTEE AS TO THE ACCURACY OR COMPLETENESS OF THE INFORMATION CONTAINED HEREIN. RMI WAS NOT RETAINED TO VERIFY THE FIELD CONDITIONS.

COURTNEY WILLOUGHBY
DATE: 12/24/18
REID MIDDLETON INC.

KUMIN
ARCHITECTURE INTERIORS PLANNING
1900 E. 5TH AVENUE, SUITE 200 ANCHORAGE, AK 99501
907.272.5363 907.272.5365

NEESER CONSTRUCTION, INC.

Reid Middleton
4300 B St., Suite 302 Anchorage, AK 99503
Phone: 907.562.3439 - www.reidmiddleton.com
Corporate License #AECC598

© Copyright Reid Middleton, Inc. 2017

Childrens Dental Clinic Building

4441 Diplomacy Drive, Anchorage AK 99508

Southcentral Foundation

No.	Description	Date

Drawn By: RLC
Checked By: SES
Date: 24 DEC 2018
Phase: RECORD DRAWINGS
Job No: 402016.015
SHEET TITLE: Parking Structure Plan - FOUNDATION PLAN LEVEL P0

SHEET NO:

SP200

NORTHERN GEOTECHNICAL ENGINEERING TERRA FIRMA TESTING

C:\Users\jaagnate\Documents\SCT CDC Garage_Structural RECORD DWGS_2015_jaagnate.rvt

12/21/2018 3:46:41 PM

RECORD DRAWINGS

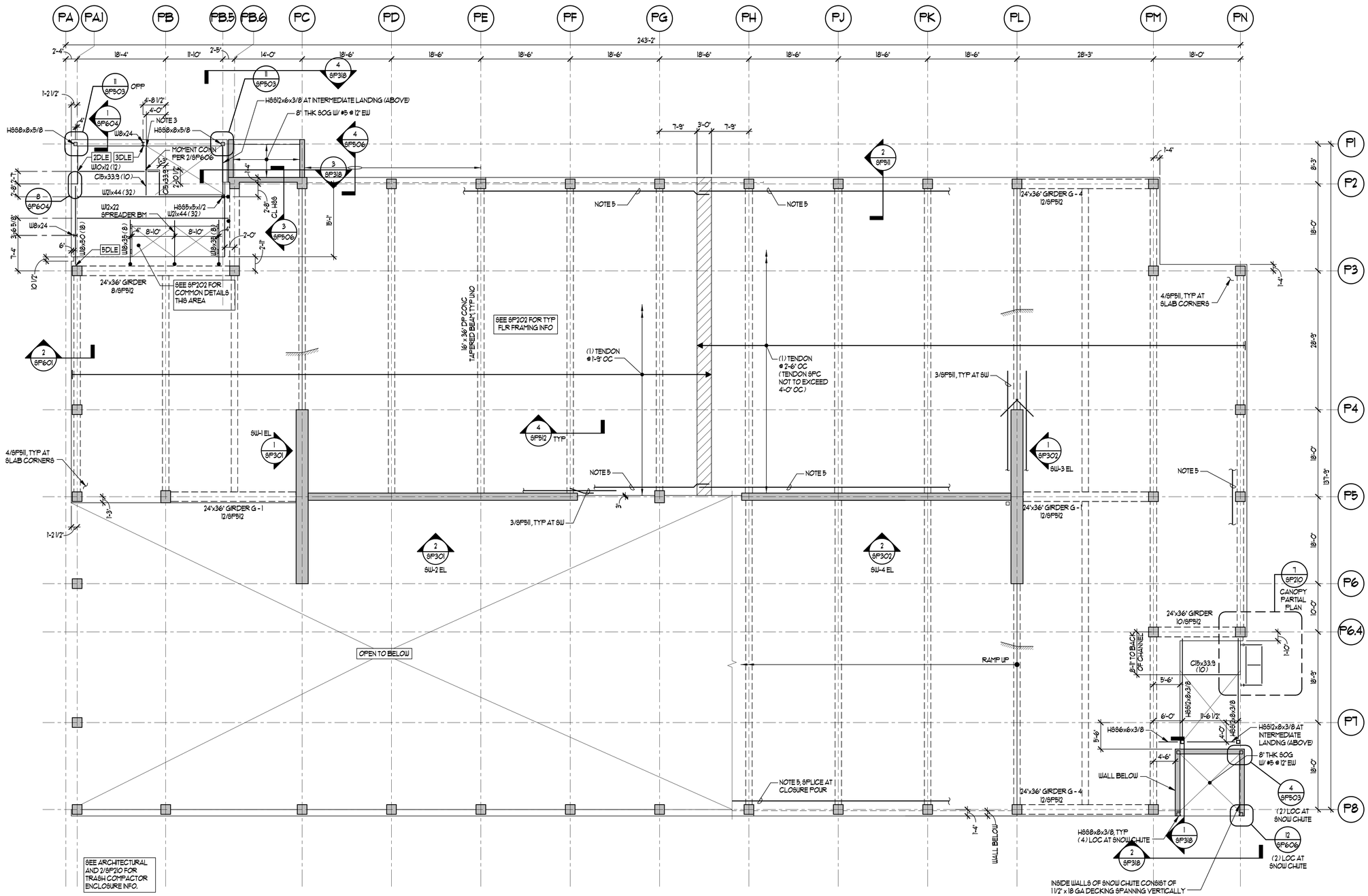

SHEET NOTES:

1. FOR FLOOR PLAN NOTES AND LEGEND SEE SP104.
2. FOR P-T BEAM AND P-T GIRDER FRAMING ELEVATIONS SEE SP303 - SP317, UNO.
3. SHEAR PLATE REPLACED W/ L6x6x3/8 FOR OFFSET EMBED PLATE

PARKING STRUCTURE PLAN - FRAMING PLAN LEVEL P1

3/32" = 1'-0"

RECORD DRAWINGS

RECORD DRAWING

THESE RECORD DRAWINGS HAVE BEEN PREPARED FROM CONTRACTOR FURNISHED INFORMATION. THERE IS NO GUARANTEE AS TO THE ACCURACY OR COMPLETENESS OF THE INFORMATION CONTAINED HEREIN. RMI WAS NOT RETAINED TO VERIFY THE FIELD CONDITIONS.

COURTNEY WILLOUGHBY
DATE: 12/24/18
REID MIDDLETON INC.

KUMIN
ARCHITECTURE INTERIORS PLANNING
1901 STORES BLVD. SUITE 200 ANCHORAGE, AK 99501
907.272.5363 FAX 907.272.5365

NEESER CONSTRUCTION, INC.

Reid Middleton
4300 B St., Suite 302 Anchorage, AK 99503
Phone: 907.562.3439 - www.reidmiddleton.com
Corporate License #AECC598

© Copyright Reid Middleton, Inc. 2017

Childrens Dental Clinic Building

4441 Diplomacy Drive, Anchorage AK 99508
Southcentral Foundation

No.	Description	Date

Drawn By: RLC
Checked By: SES
Date: 24 DEC 2018
Phase: RECORD DRAWINGS
Job No: 402016.015
SHEET TITLE: Parking Structure Plan - LEVEL P1 FRAMING PLAN
SHEET NO: SP201

C:\Users\glagnier\Documents\SCF CDC Garage_Structural RECORD DWGS_2018_glagnier.rvt
12/27/2018 3:46:41 PM

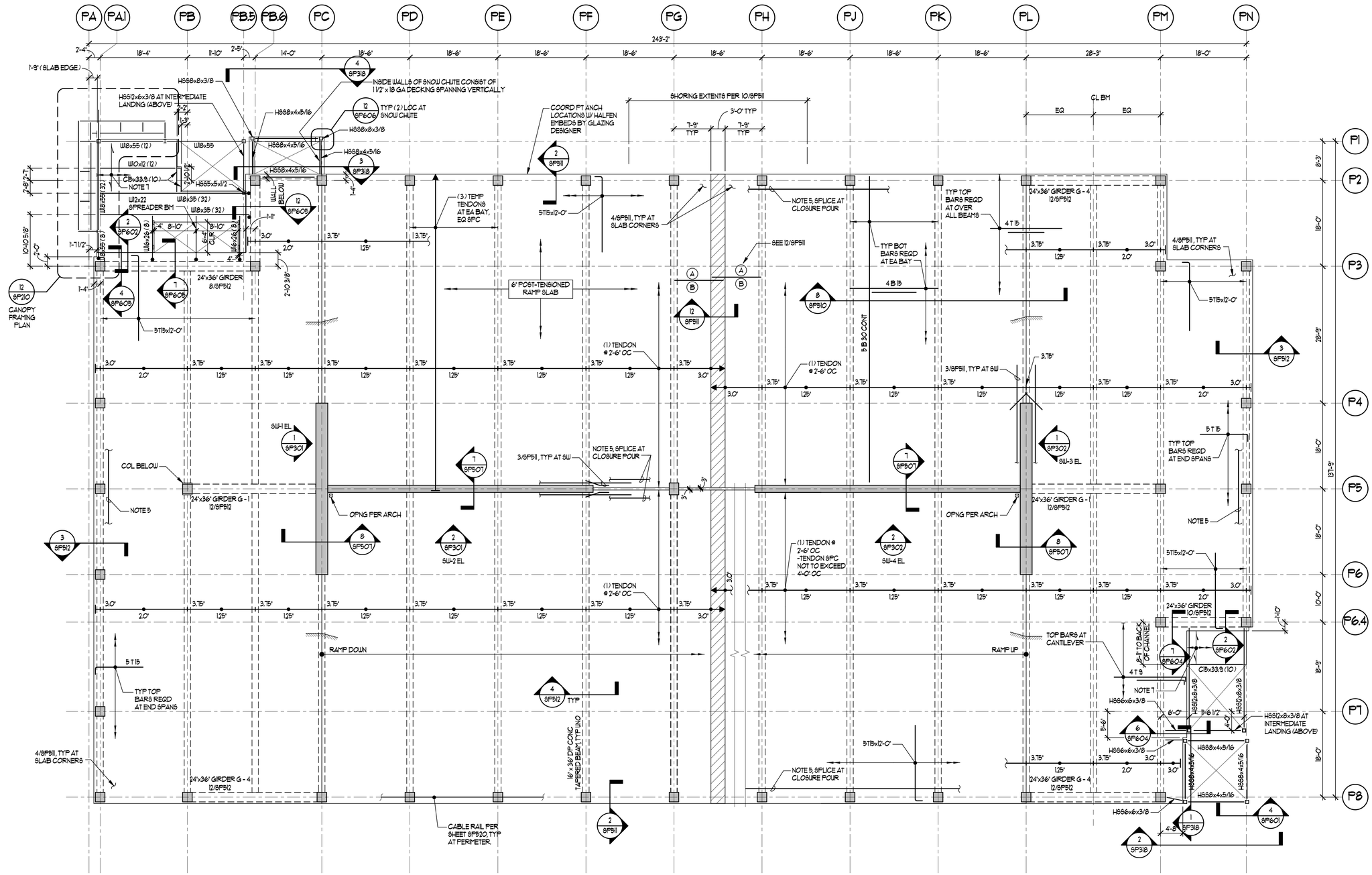

SHEET NOTES:

1. FOR FLOOR PLAN NOTES AND LEGEND SEE SP104.
2. FOR P-T BEAM AND P-T GIRDER FRAMING ELEVATIONS SEE SP303 - SP317, UNO.
3. SHEAR PLATE REPLACED W/ L6x6x3/8 FOR OFFSET EMBED PLATE

PARKING STRUCTURE PLAN - FRAMING PLAN LEVEL P2

3/32" = 1'-0"

RECORD DRAWINGS

RECORD DRAWING

THESE RECORD DRAWINGS HAVE BEEN PREPARED FROM CONTRACTOR FURNISHED INFORMATION. THERE IS NO GUARANTEE AS TO THE ACCURACY OR COMPLETENESS OF THE INFORMATION CONTAINED HEREIN. RMI WAS NOT RETAINED TO VERIFY THE FIELD CONDITIONS.

COURTNEY WILLOUGHBY
DATE: 12/24/18
REID MIDDLETON INC.

KUMIN
ARCHITECTURE INTERIORS PLANNING
907.272.5551 907.272.5561
1500 STEESE
ANCHORAGE, AK 99501

NEESER CONSTRUCTION, INC.
Reid Middleton
4300 B St., Suite 302 Anchorage, AK 99503
Phone: 907.562.3439 - www.reidmiddleton.com
Corporate License #AECC598

© Copyright Reid Middleton, Inc. 2017

Childrens Dental Clinic Building

4441 Diplomacy Drive, Anchorage AK 99508

Southcentral Foundation

No.	Description	Date

Drawn By: RLC
Checked By: SES
Date: 24 DEC 2018
Phase: RECORD DRAWINGS
Job No: 402016.015
SHEET TITLE: Parking Structure Plan - LEVEL P2 FRAMING PLAN

SHEET NO:

SP202

C:\Users\plaginski\Documents\SCF CDC Garage_Structural RECORD DWGS_2015_plaginski.rvt

12/21/2018 3:46:43 PM

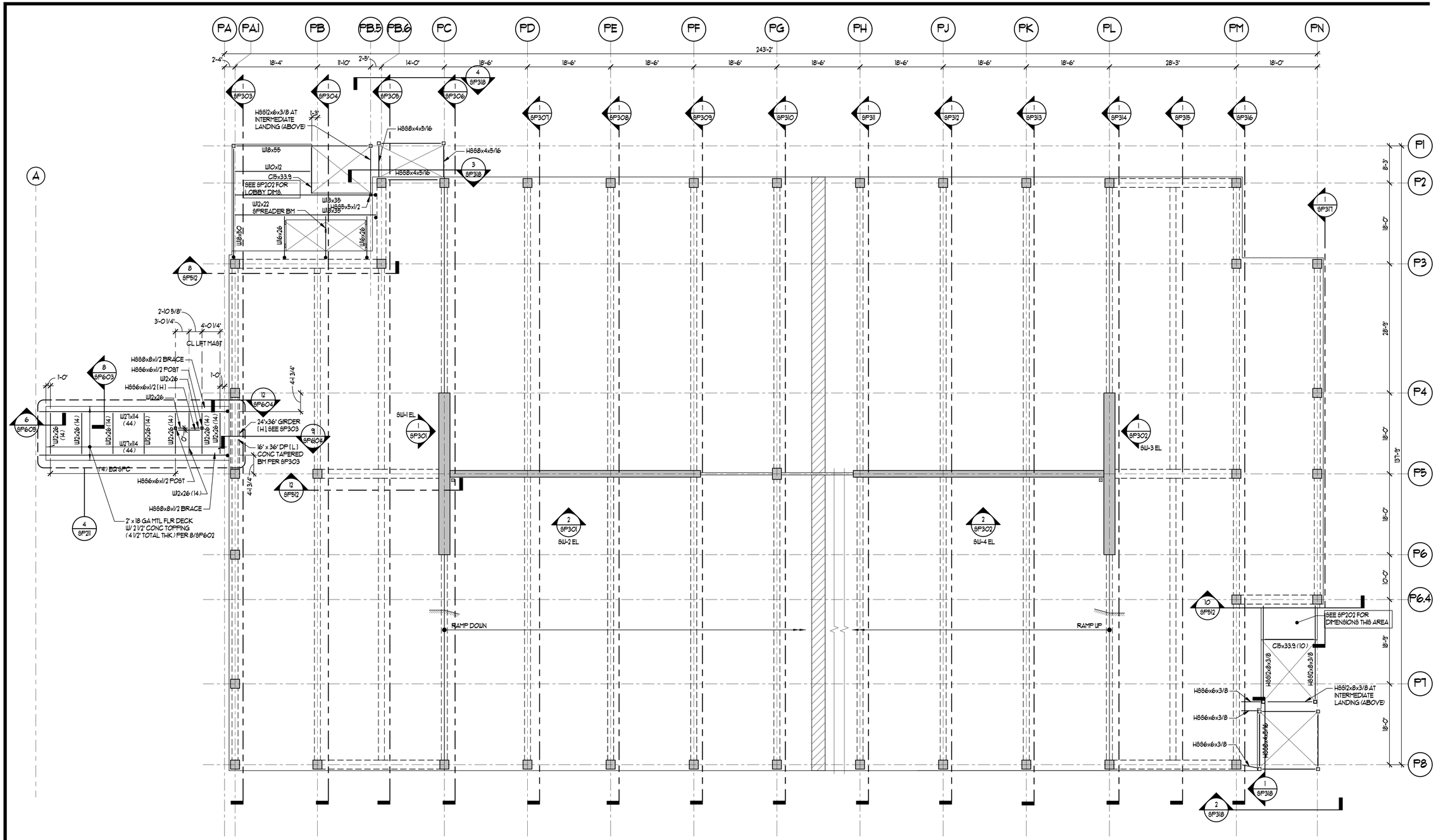

SHEET NOTES:

1. REFERENCE SP202 FOR FRAMING INFORMATION NOT NOTED.

PARKING STRUCTURE PLAN - FRAMING PLAN LEVEL P3

3/32" = 1'-0"

RECORD DRAWINGS

RECORD DRAWING

THESE RECORD DRAWINGS HAVE BEEN PREPARED FROM CONTRACTOR FURNISHED INFORMATION. THERE IS NO GUARANTEE AS TO THE ACCURACY OR COMPLETENESS OF THE INFORMATION CONTAINED HEREIN. RMI WAS NOT RETAINED TO VERIFY THE FIELD CONDITIONS.

COURTNEY WILLOUGHBY
DATE: 12/24/18
REID MIDDLETON INC.

KUMIN
ARCHITECTURE INTERIORS PLANNING
907.272.5333 907.272.5391
1031 W 4th AVE, SUITE 200 ANCHORAGE, AK 99501

NEESER CONSTRUCTION, INC.
Reid Middleton
4300 B St., Suite 302 Anchorage, AK 99503
Phone: 907.562.3439 - www.reidmiddleton.com
Corporate License #AECC598

© Copyright Reid Middleton, Inc. 2017

Childrens Dental Clinic Building

4441 Diplomacy Drive, Anchorage AK 99508

Southcentral Foundation

No.	Description	Date

Drawn By: RLC
Checked By: SES
Date: 24 DEC 2018
Phase: RECORD DRAWINGS
Job No: 402016.015
SHEET TITLE: Parking Structure Plan - LEVEL P3 FRAMING PLAN
SHEET NO: SP203

C:\Users\glenn\AecDocuments\SCF CDC Garage_Structural RECORD DWGS_2018_glenn.rvt
12/27/2018 3:46:44 PM

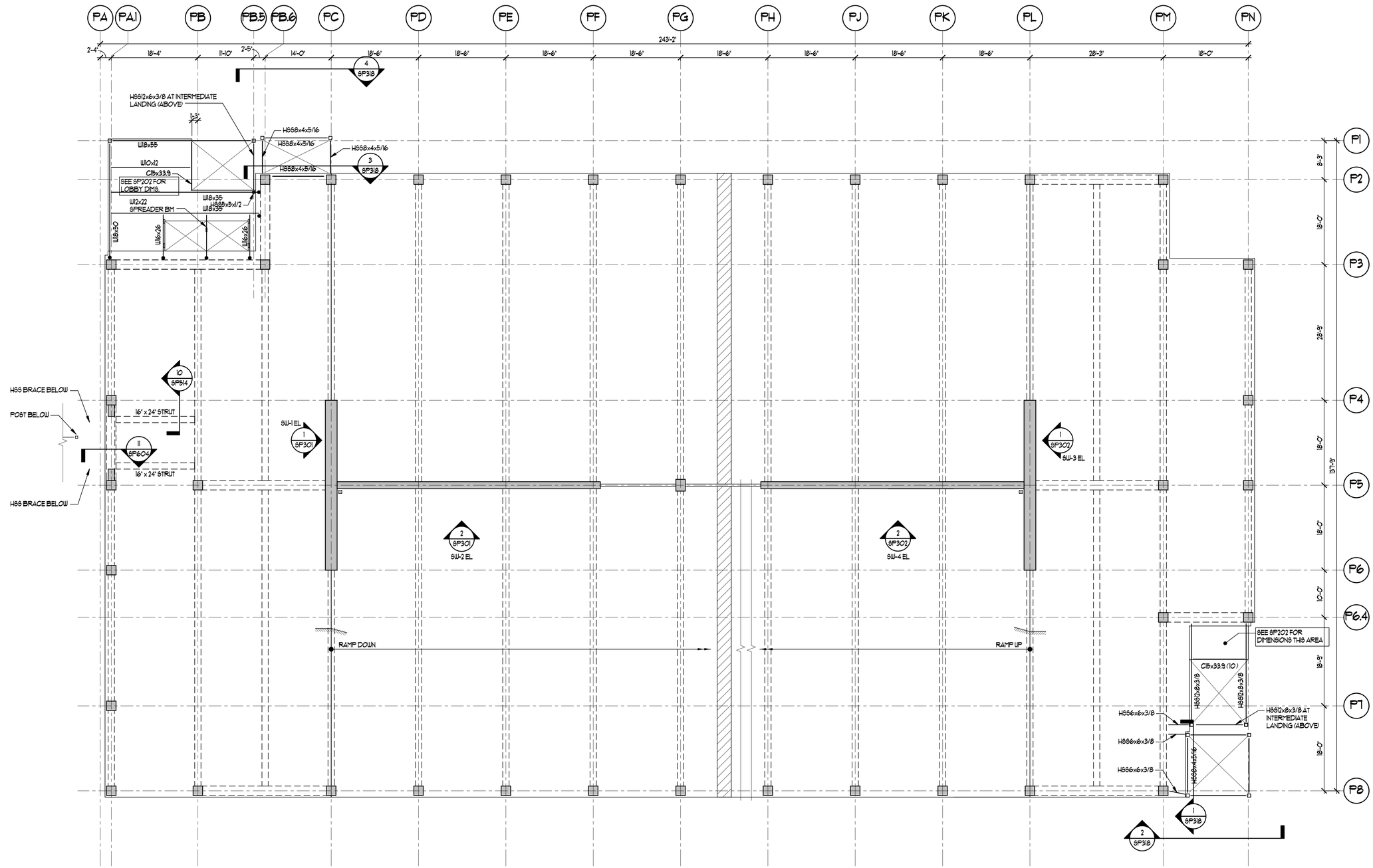

SHEET NOTES:

1. REFERENCE SP202 FOR FRAMING INFORMATION NOT NOTED.

PARKING STRUCTURE PLAN - FRAMING PLAN LEVEL P4

3/32" = 1'-0"

RECORD DRAWINGS

RECORD DRAWING

THESE RECORD DRAWINGS HAVE BEEN PREPARED FROM CONTRACTOR FURNISHED INFORMATION. THERE IS NO GUARANTEE AS TO THE ACCURACY OR COMPLETENESS OF THE INFORMATION CONTAINED HEREIN. RMI WAS NOT RETAINED TO VERIFY THE FIELD CONDITIONS.

COURTNEY WILLOUGHBY
DATE: 12/24/18
REID MIDDLETON INC.

KUMIN
ARCHITECTURE INTERIORS PLANNING
1901 STEELE STREET, SUITE 200 ANCHORAGE, AK 99503
907.272.5363 FAX 907.272.5391 KUMIN.COM

NEESER CONSTRUCTION, INC.
Reid Middleton
4300 B St., Suite 302 Anchorage, AK 99503
Phone: 907.562.3439 - www.reidmiddleton.com
Corporate License #AECC598

© Copyright Reid Middleton, Inc. 2017

Childrens Dental Clinic Building

4441 Diplomacy Drive, Anchorage AK 99508
Southcentral Foundation

No.	Description	Date

Drawn By: RLC
Checked By: SES
Date: 24 DEC 2018
Phase: RECORD DRAWINGS
Job No: 402016.015
SHEET TITLE: Parking Structure Plan - LEVEL P4 FRAMING PLAN
SHEET NO: SP204

C:\Users\glenn\OneDrive\Documents\SCF CDC Garage_Structural RECORD DWGS_2018_glenn.rvt
12/21/2018 3:46:45 PM

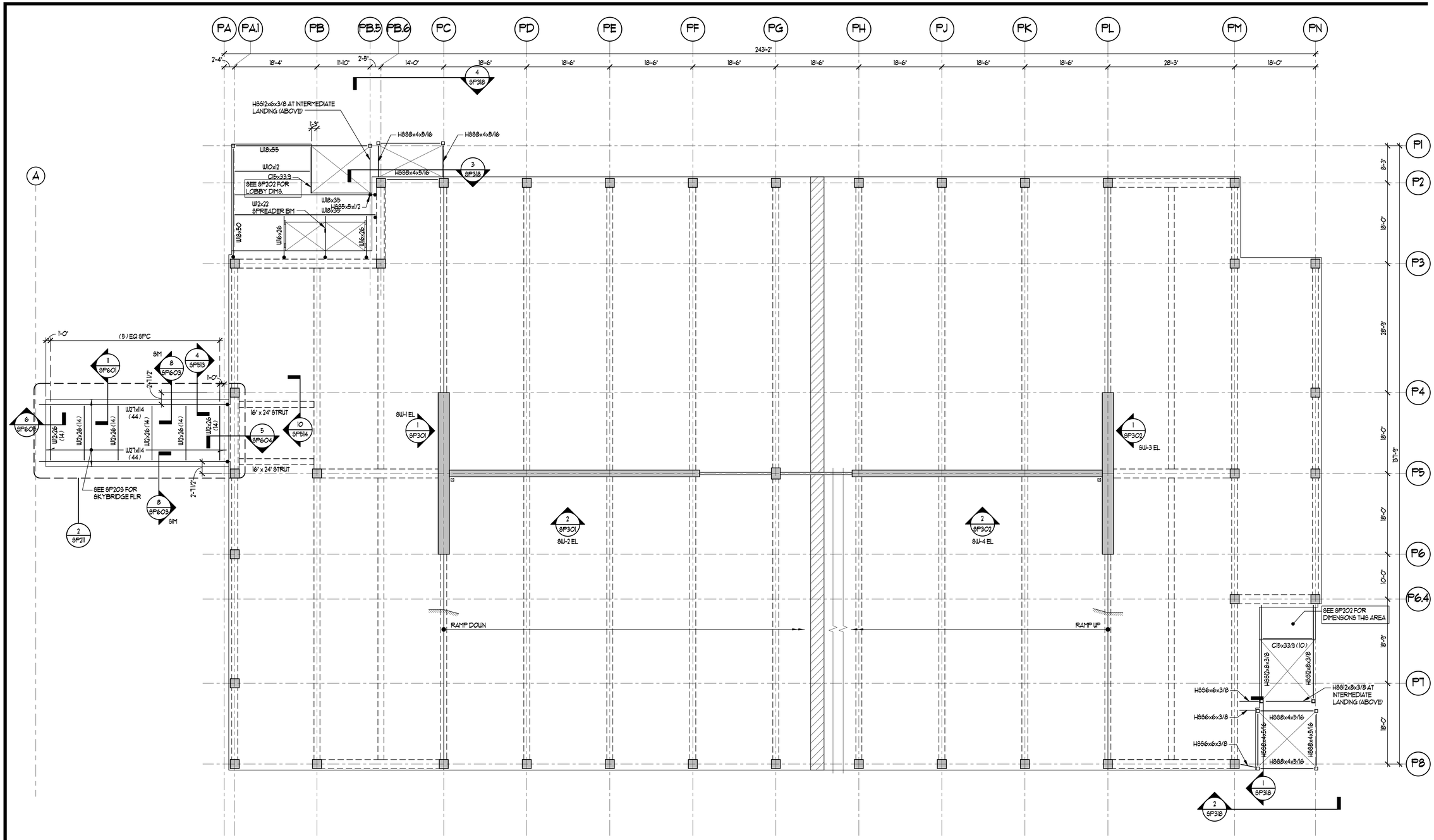

SHEET NOTES:

1. REFERENCE SP202 FOR FRAMING INFORMATION NOT NOTED.

PARKING STRUCTURE PLAN - FRAMING PLAN LEVEL P5

3/32" = 1'-0"

RECORD DRAWINGS

RECORD DRAWING

THESE RECORD DRAWINGS HAVE BEEN PREPARED FROM CONTRACTOR FURNISHED INFORMATION. THERE IS NO GUARANTEE AS TO THE ACCURACY OR COMPLETENESS OF THE INFORMATION CONTAINED HEREIN. RMI WAS NOT RETAINED TO VERIFY THE FIELD CONDITIONS.

COURTNEY WILLOUGHBY
DATE: 12/24/18
REID MIDDLETON INC.

KUMIN
ARCHITECTURE INTERIORS PLANNING
1900 SPENARD ROAD, SUITE 200 ANCHORAGE, ALASKA 99501
TEL: 907.258.2263 FAX: 907.258.2266

NEESER CONSTRUCTION, INC.
Reid Middleton
4300 B St., Suite 302 Anchorage, AK 99503
Phone: 907.562.3439 - www.reidmiddleton.com
Corporate License #AECC598

© Copyright Reid Middleton, Inc. 2017

Childrens Dental Clinic Building

4441 Diplomacy Drive, Anchorage AK 99508
Southcentral Foundation

No.	Description	Date

Drawn By: RLC
Checked By: SES
Date: 24 DEC 2018
Phase: RECORD DRAWINGS
Job No: 402016.015
SHEET TITLE: Parking Structure Plan - LEVEL P5 FRAMING PLAN
SHEET NO: SP205

C:\Users\glagnier\Documents\SCF CDC Carriage_Structural RECORD DWGS_2018_glagnier.rvt
12/27/2018 3:46:46 PM

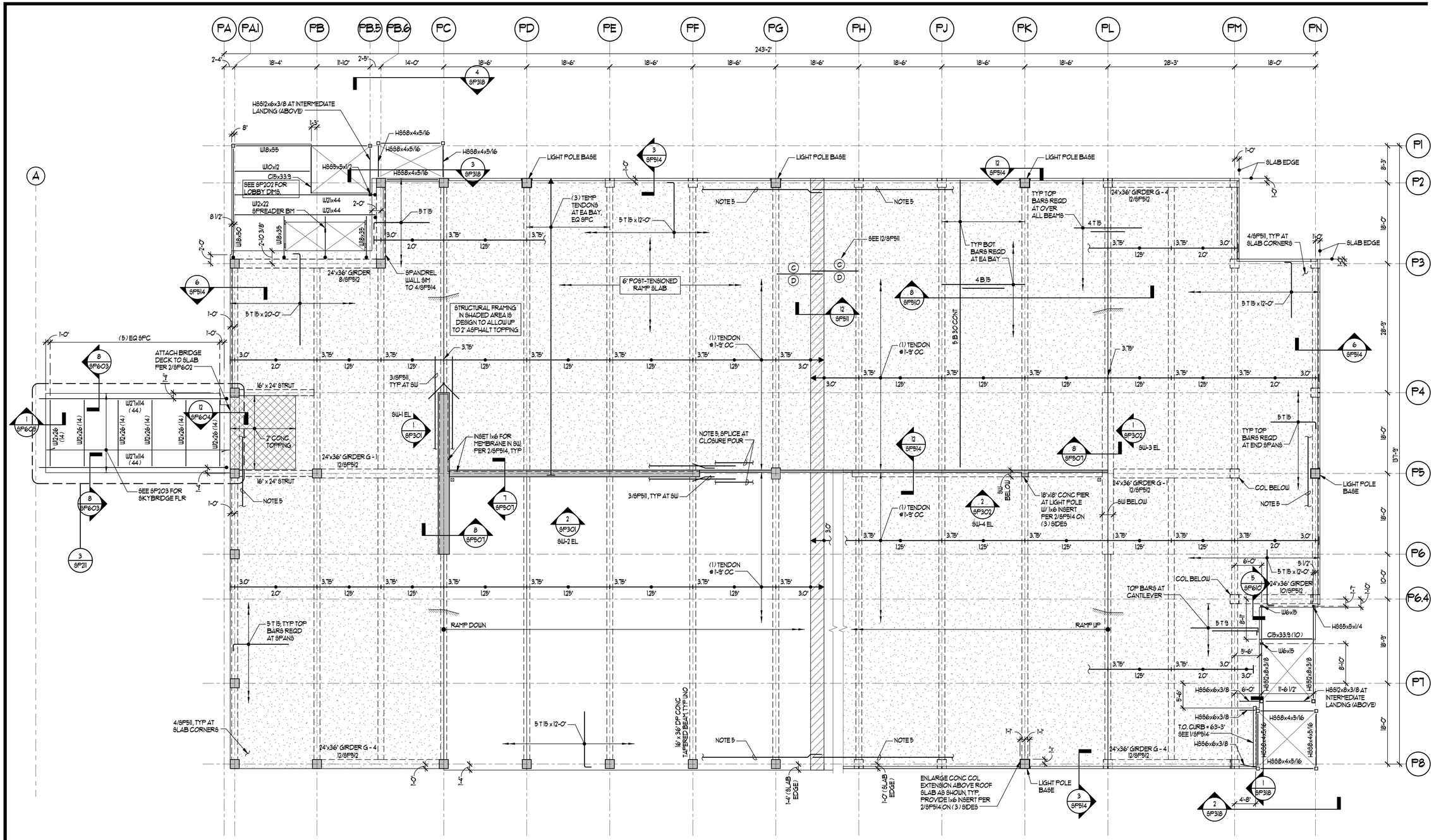

SHEET NOTES:

1. FOR FLOOR PLAN NOTES AND LEGEND SEE SP104.
2. FOR P-T BEAM AND P-T GIRDER FRAMING ELEVATIONS SEE SP303 - SP317, UNO.
3. SHEAR PLATE REPLACED W/ L6x6x3/8 FOR OFFSET EMBED PLATE

PARKING STRUCTURE PLAN - FRAMING PLAN LEVEL P6

3/32" = 1'-0"

RECORD DRAWINGS

RECORD DRAWING

THESE RECORD DRAWINGS HAVE BEEN PREPARED FROM CONTRACTOR FURNISHED INFORMATION. THERE IS NO GUARANTEE AS TO THE ACCURACY OR COMPLETENESS OF THE INFORMATION CONTAINED HEREIN. RMI WAS NOT RETAINED TO VERIFY THE FIELD CONDITIONS.

COURTNEY WILLOUGHBY
DATE: 12/24/18

REID MIDDLETON INC.

KUMIN
ARCHITECTURE INTERIORS PLANNING
1901 STEELE ST. SUITE 200 ANCHORAGE, AK 99503
907.272.5363 907.272.5391

NEESER CONSTRUCTION, INC.
Reid Middleton
4300 B St., Suite 302 Anchorage, AK 99503
Phone: 907.562.3439 - www.reidmiddleton.com
Corporate License #AECC598

© Copyright Reid Middleton, Inc. 2017

Childrens Dental Clinic Building

4441 Diplomacy Drive, Anchorage AK 99508

Southcentral Foundation

No.	Description	Date

Drawn By: RLC
Checked By: SES
Date: 24 DEC 2018
Phase: RECORD DRAWINGS
Job No: 402016.015
SHEET TITLE: Parking Structure Plan - LEVEL P6 FRAMING PLAN
SHEET NO: SP206

C:\Users\glangevin\Documents\SCF CDC Garage_Structural RECORD DWGS_2018_glangevin.rvt
12/27/2018 3:46:49 PM

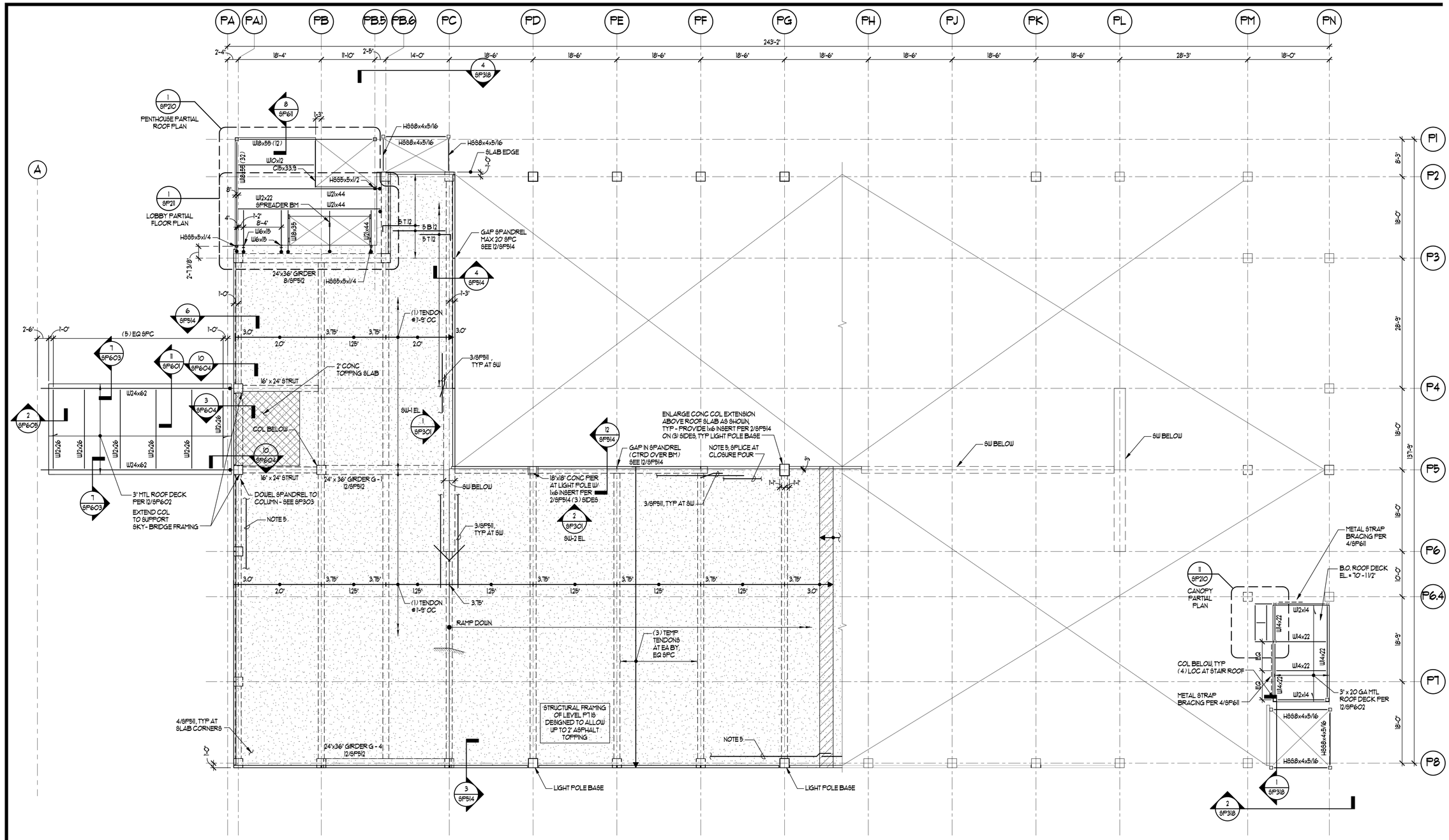

SHEET NOTES:

1. FOR FLOOR PLAN NOTES AND LEGEND SEE SP104.
2. FOR P-T BEAM AND P-T GIRDER FRAMING ELEVATIONS SEE SP303 - SP317, UNO.
3. SHEAR PLATE REPLACED W/ L6x6x3/8 FOR OFFSET EMBED PLATE

PARKING STRUCTURE PLAN - FRAMING PLAN LEVEL P7

3/32" = 1'-0"

RECORD DRAWINGS

RECORD DRAWING

THESE RECORD DRAWINGS HAVE BEEN PREPARED FROM CONTRACTOR FURNISHED INFORMATION. THERE IS NO GUARANTEE AS TO THE ACCURACY OR COMPLETENESS OF THE INFORMATION CONTAINED HEREIN. RMI WAS NOT RETAINED TO VERIFY THE FIELD CONDITIONS.

COURTNEY WILLOUGHBY
DATE: 12/24/18
REID MIDDLETON INC.

KUMIN
ARCHITECTURE INTERIORS PLANNING
1900 SPENARD RD. SUITE 200 ANCHORAGE, 99501
T 907.272.5363 F 907.272.5365

NEESER CONSTRUCTION, INC.
Reid Middleton
4300 B St., Suite 302 Anchorage, AK 99503
Phone: 907.562.3439 - www.reidmiddleton.com
Corporate License #AECC598

© Copyright Reid Middleton, Inc. 2017

Childrens Dental Clinic Building

4441 Diplomacy Drive, Anchorage AK 99508

Southcentral Foundation

No.	Description	Date

Drawn By: RLC
Checked By: SES
Date: 24 DEC 2018
Phase: RECORD DRAWINGS
Job No: 402016.015
SHEET TITLE: Parking Structure Plan - LEVEL P7 FRAMING PLAN
SHEET NO: SP207

C:\Users\plagnier\Documents\SCF CDC Garage_Structural RECORD DWGS_2018_plagnier.rvt
12/27/2018 3:46:50 PM

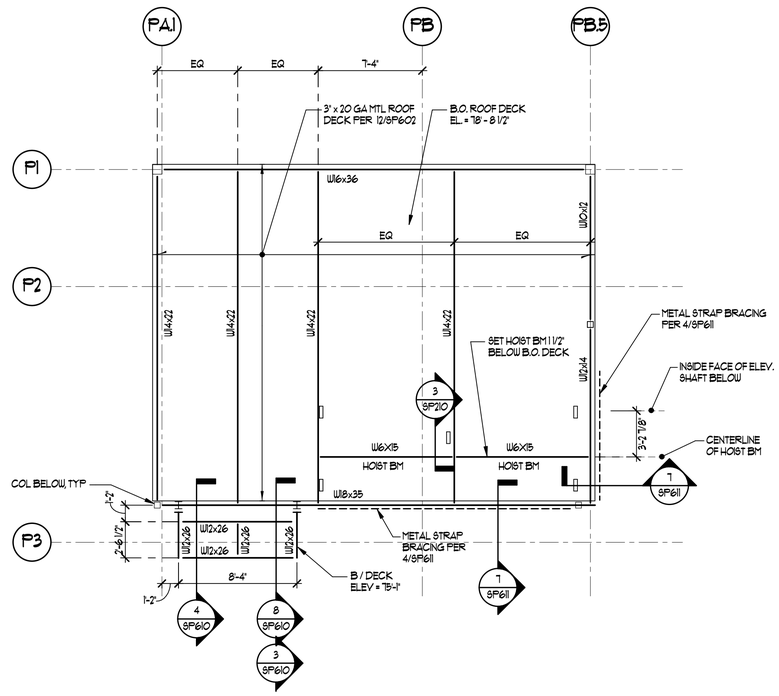

PENTHOUSE PARTIAL ROOF PLAN 1
3/16" = 1'-0"

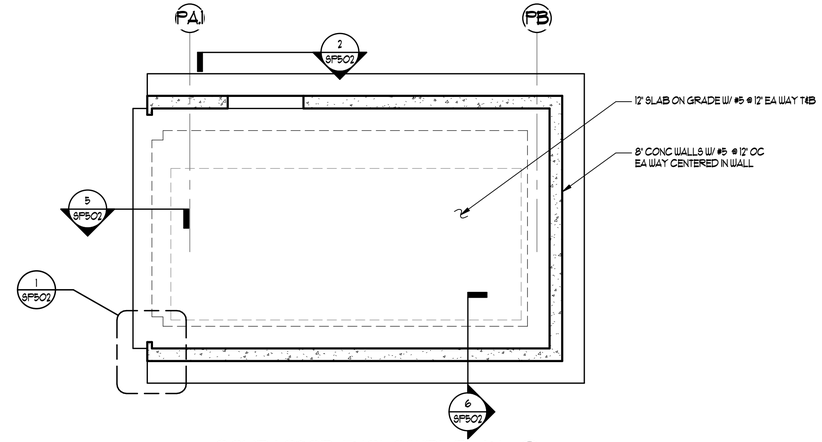

COMPACTOR ENCLOSURE PLAN 2
1/4" = 1'-0"

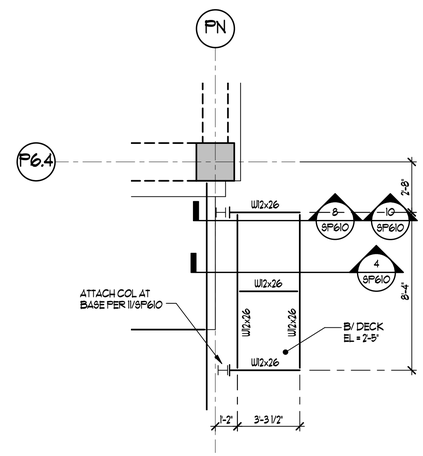

LEVEL P1 NORTHEAST CANOPY FRAMING 7
1/4" = 1'-0"

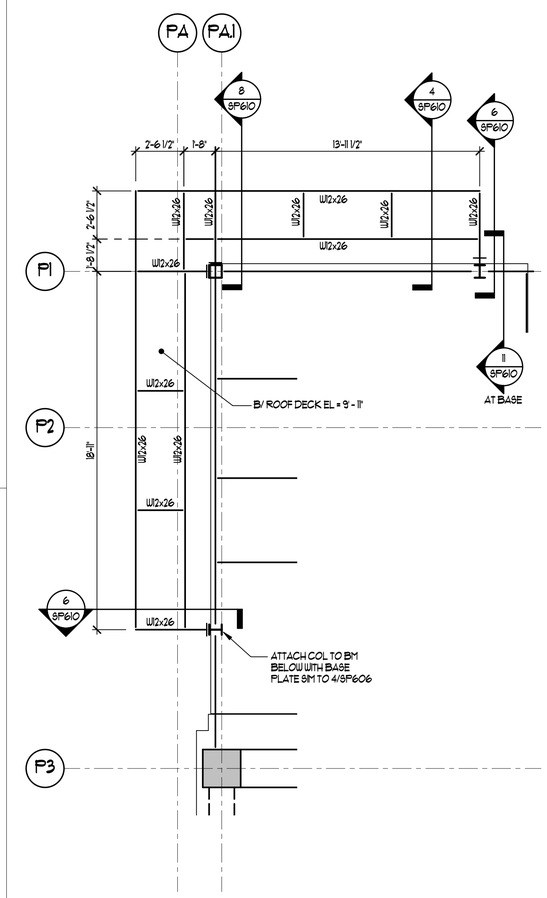

LEVEL P2 SOUTHWEST CANOPY FRAMING 12
1/4" = 1'-0"

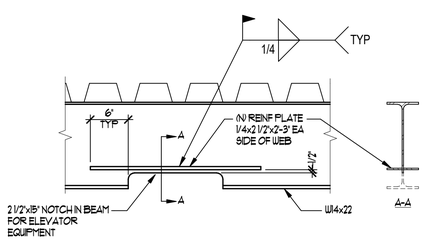

ROOF BEAM MODIFICATIONS 3
1" = 1'-0"

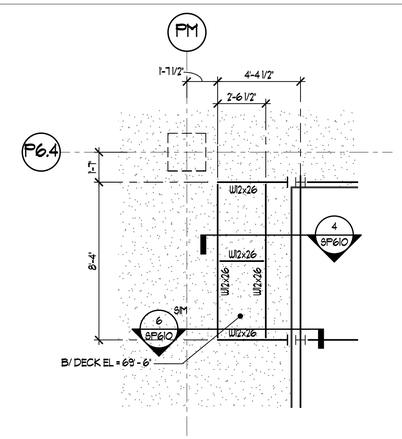

LEVEL P1 NORTHEAST CANOPY FRAMING 11
1/4" = 1'-0"

RECORD DRAWING

THESE RECORD DRAWINGS HAVE BEEN PREPARED FROM CONTRACTOR FURNISHED INFORMATION. THERE IS NO GUARANTEE AS TO THE ACCURACY OR COMPLETENESS OF THE INFORMATION CONTAINED HEREIN. RMI WAS NOT RETAINED TO VERIFY THE FIELD CONDITIONS.

COURTNEY WILLOUGHBY
DATE: 12/24/18
REID MIDDLETON INC.

KUMIN
ARCHITECTURE INTERIORS PLANNING
1901 STREET, STE 200 ANCHORAGE, AK 99501
907.272.5561 KUMIN.COM

NEESER CONSTRUCTION, INC.
Reid Middleton
4300 B St., Suite 302 Anchorage, AK 99503
Phone: 907.562.3439 - www.reidmiddleton.com
Corporate License #AECC598
© Copyright Reid Middleton, Inc. 2017

Childrens Dental Clinic Building

4441 Diplomacy Drive, Anchorage AK 99508
Southcentral Foundation

No.	Description	Date

Drawn By: RLC
Checked By: SES
Date: 24 DEC 2018
Phase: RECORD DRAWINGS
Job No: 402016.015
SHEET TITLE: PARTIAL FRAMING PLANS
SHEET NO: SP210

C:\Users\glasnek\Documents\SCF CDC Garage_Structural RECORD DWGS_2015_jaagstad.rvt
12/21/2018 3:48:51 PM

RECORD DRAWINGS

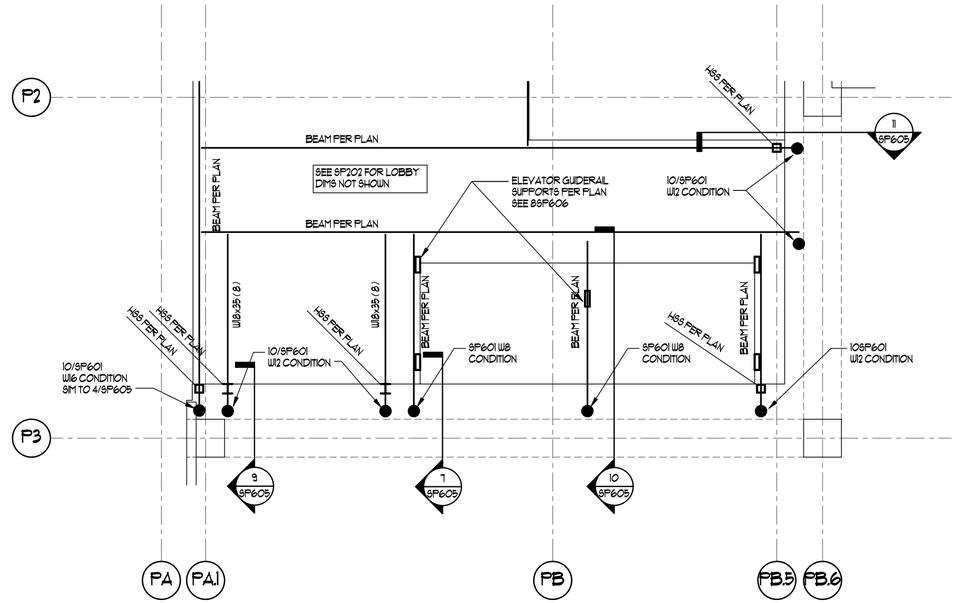

P7 SOUTH STAIR PARTIAL PLAN 1
1/4" = 1'-0"

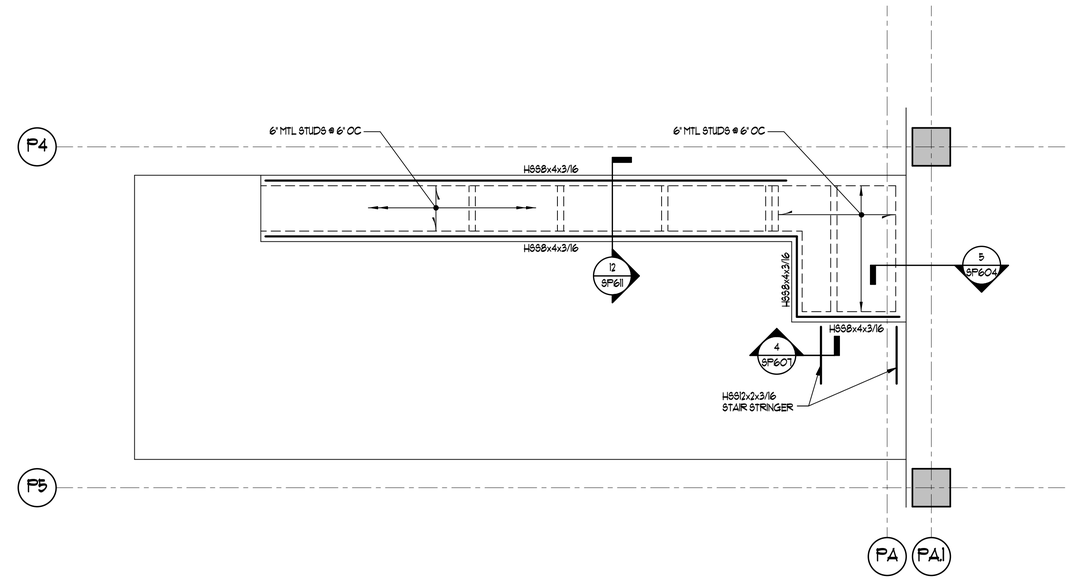

P5 SKYBRIDGE OVERFRAME 2
1/4" = 1'-0"

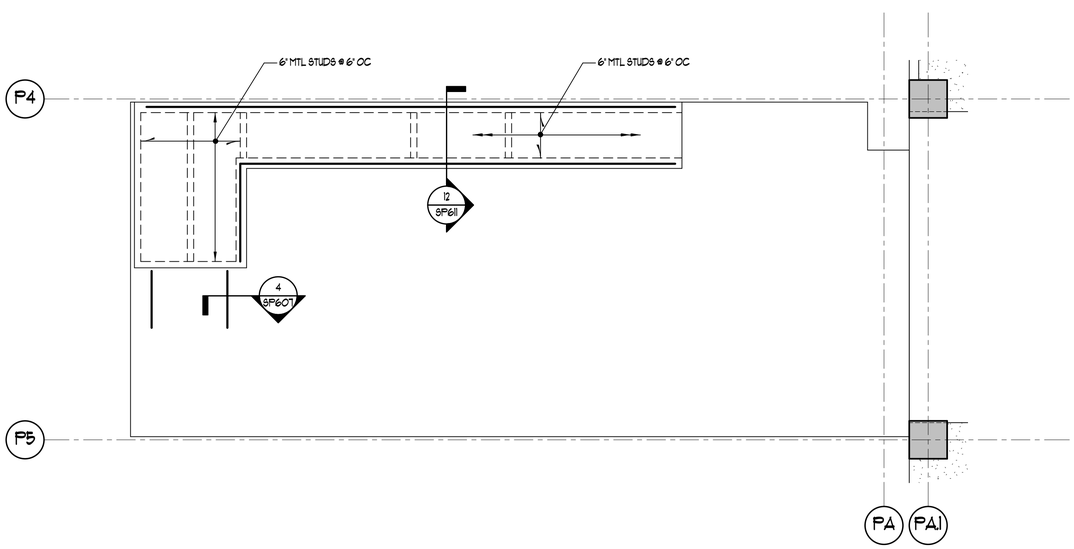

P6 SKYBRIDGE OVERFRAME 3
1/4" = 1'-0"

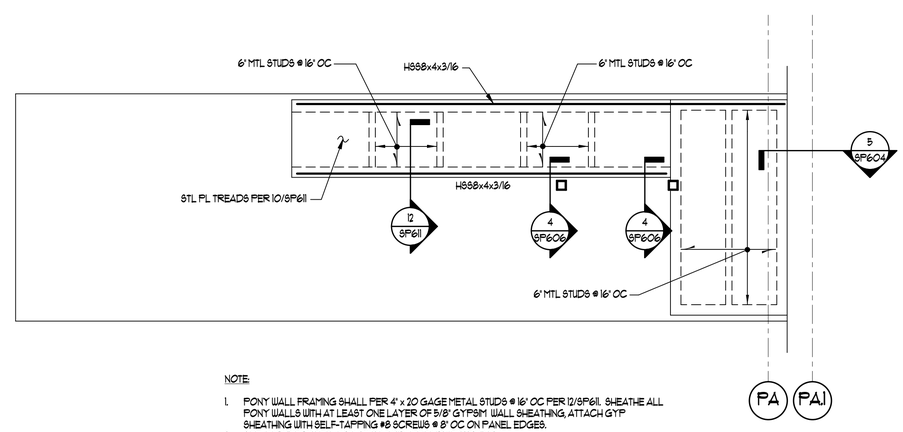

NOTE:

1. PONY WALL FRAMING SHALL PER 4" x 20 GAGE METAL STUDS @ 16" OC PER 12/SP611. SHEATHE ALL PONY WALLS WITH AT LEAST ONE LAYER OF 5/8" GYPSUM WALL SHEATHING, ATTACH GYP SHEATHING WITH SELF-TAPPING #8 SCREWS @ 8" OC ON PANEL EDGES.
2. SEE ARCHITECTURAL FOR STAIR AND RAMP DIMENSIONING.

P3-P4 SKYBRIDGE OVERFRAME 4
1/4" = 1'-0"

RECORD DRAWINGS

RECORD DRAWING

THESE RECORD DRAWINGS HAVE BEEN PREPARED FROM CONTRACTOR FURNISHED INFORMATION. THERE IS NO GUARANTEE AS TO THE ACCURACY OR COMPLETENESS OF THE INFORMATION CONTAINED HEREIN. RMI WAS NOT RETAINED TO VERIFY THE FIELD CONDITIONS.

COURTNEY WILLOUGHBY
DATE: 12/24/18
REID MIDDLETON INC.

KUMIN
ARCHITECTURE INTERIORS PLANNING
1818 STORES STREET, SUITE 200 ANCHORAGE, AK 99501
907.272.5363 907.272.5365

NEESER CONSTRUCTION, INC.
Reid Middleton
4300 B St., Suite 302 Anchorage, AK 99503
Phone: 907.562.3439 - www.reidmiddleton.com
Corporate License #AECC598
© Copyright Reid Middleton, Inc. 2017

Childrens Dental Clinic Building

4441 Diplomacy Drive, Anchorage AK 99508
Southcentral Foundation

No.	Description	Date

Drawn By: RLC
Checked By: SES
Date: 24 DEC 2018
Phase: RECORD DRAWINGS
Job No: 402016.015
SHEET TITLE: PARTIAL FRAMING PLANS
SHEET NO: SP211

C:\Users\plaghas\Documents\SCF CDC Garage_Structural RECORD DWGS_2019_plaghas.rvt
12/21/2018 3:44:51 PM

SHEAR WALL NOTES:

1. ALL SHEAR WALL THICKNESS AND REINFORCEMENT SHALL BE AS NOTED ON THE ELEVATIONS. PROVIDE MATCHING DOWELS TO FOOTING, UNO.

2. REBAR DETAILING: ALL SHEAR WALL HORIZONTAL REINFORCEMENT SHALL BE DEVELOPED AND SPLICED FOR FULL TENSION CAPACITY PER SCHEDULE OF 12/SP502 AS 'TOP BARS'. VERTICAL SHEAR WALL REINFORCEMENT SHALL BE DEVELOPED 125% OF TABLE I OF 12/SP502 AND SPLICED PER TABLE OF 4/SP501. EMBED FOOTING DOWELS 125% OF TABLE I OF 12/SP502 WHERE DEPTH AVAILABLE, HOOK 125% OF TABLE II OTHERWISE.

3. PROVIDE HOOKS AT ENDS OF ALL HORIZONTAL BARS AT WALL ENDS AND AT FACES OF OPENINGS. SEE 4/SP501. PROVIDE CORNER BARS WHERE REQUIRED.

4. REFER TO DETAIL FOR DOWELS REQUIRED AT INTERSECTIONS OF SLABS AND WALLS, SEE 7/SP501 AND 8/SP501.

5. SEE 7/SP501 FOR TYPICAL OPENING REINFORCEMENT NOT OTHERWISE NOTED ON ELEVATIONS. VERIFY OPENING DIMENSIONS WITH ARCHITECTURAL, MECHANICAL AND ELECTRICAL DRAWINGS. PRIOR TO DETAILING, CONTRACTOR TO VERIFY ALL DIMENSIONS AND LOCATIONS FOR PENETRATIONS ARE COORDINATED WITH MECHANICAL, ELECTRICAL, PLUMBING AND FIRE PROTECTION DRAWINGS.

6. SEE GENERAL STRUCTURAL NOTES FOR SPECIAL MATERIAL REQUIREMENTS OF ALL VERTICAL BARS.

LEGEND:

EXTENT OF BOUNDARY ELEMENT AND TIES PER 12/SP501

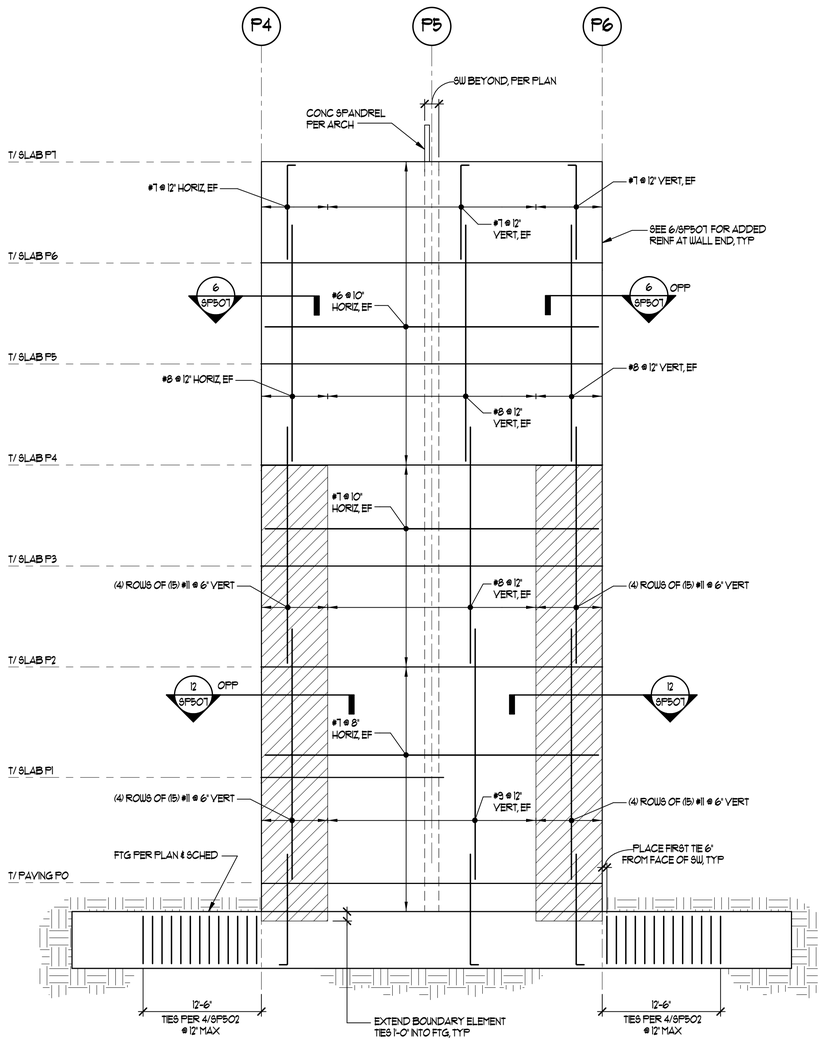

30" THICK

GRID PC - SW-1 ELEVATION 1
1/8" = 1'-0"

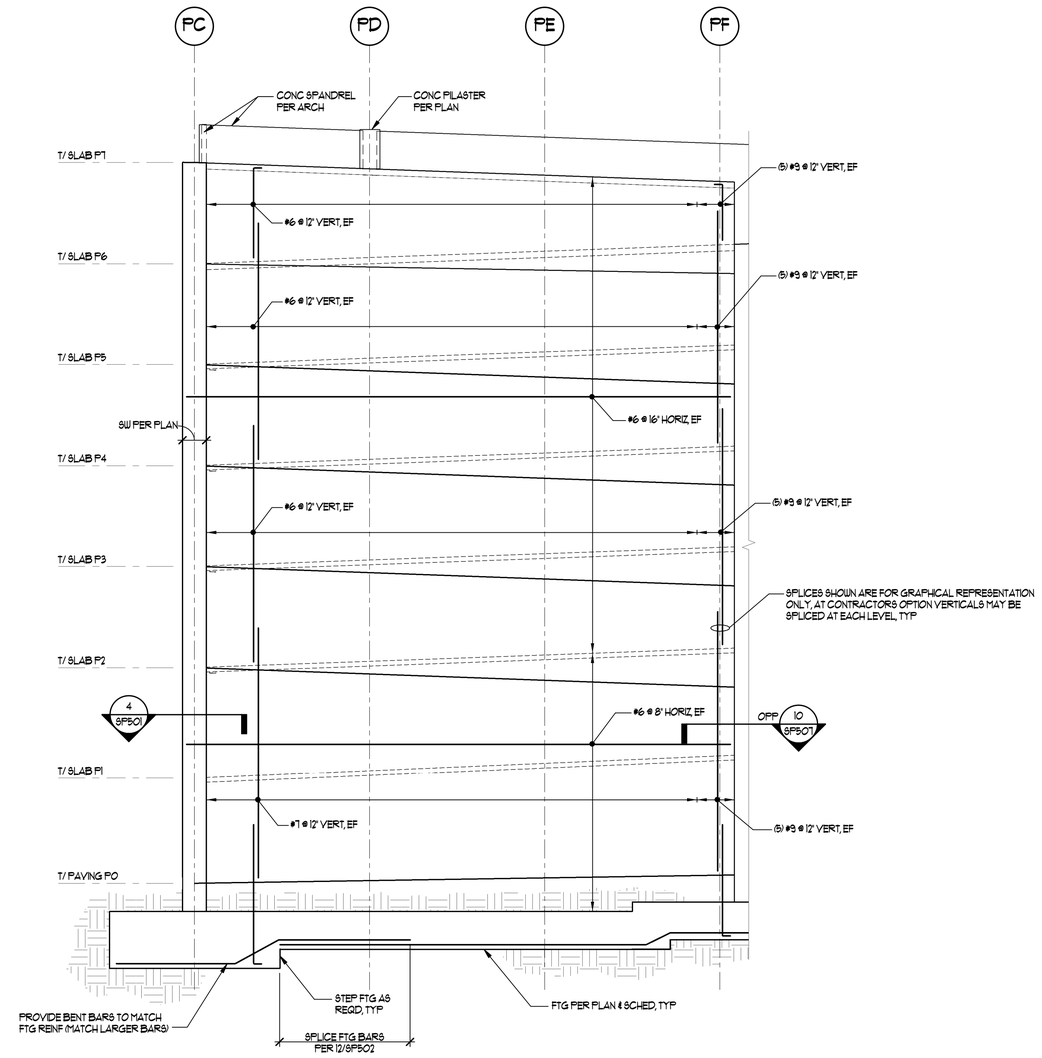

18" THICK

GRID P5 - SW-2 ELEVATION 2
1/8" = 1'-0"

RECORD DRAWINGS

RECORD DRAWING

THESE RECORD DRAWINGS HAVE BEEN PREPARED FROM CONTRACTOR FURNISHED INFORMATION. THERE IS NO GUARANTEE AS TO THE ACCURACY OR COMPLETENESS OF THE INFORMATION CONTAINED HEREIN. RMI WAS NOT RETAINED TO VERIFY THE FIELD CONDITIONS.

COURTNEY WILLOUGHBY
DATE: 12/24/18
REID MIDDLETON INC.

KUMIN
ARCHITECTURE INTERIORS PLANNING
9101 JEWEL LAKE RD, STE 200 ANCHORAGE, AK 99502
(907) 272-5561 (907) 562-5091

NEESER CONSTRUCTION, INC.

Reid Middleton
4300 B St., Suite 302 Anchorage, AK 99503
Phone: 907 562-3439 - www.reidmiddleton.com
Corporate License #AECC598

© Copyright Reid Middleton, Inc. 2017

Childrens Dental Clinic Building

4441 Diplomacy Drive, Anchorage AK 99508
Southcentral Foundation

No.	Description	Date

Drawn By: RLC
Checked By: SES
Date: 24 DEC 2018
Phase: RECORD DRAWINGS
Job No: 402016.015
SHEET TITLE: SHEAR WALL ELEVATIONS
SHEET NO: SP301

C:\Users\glagnier\Documents\SCT CDC Garage_Structural RECORD DWGS_2015_glagnier.rvt
12/27/2018 3:46:53 PM

SHEAR WALL NOTES:

1. SEE SP301 FOR NOTES AND LEGEND.

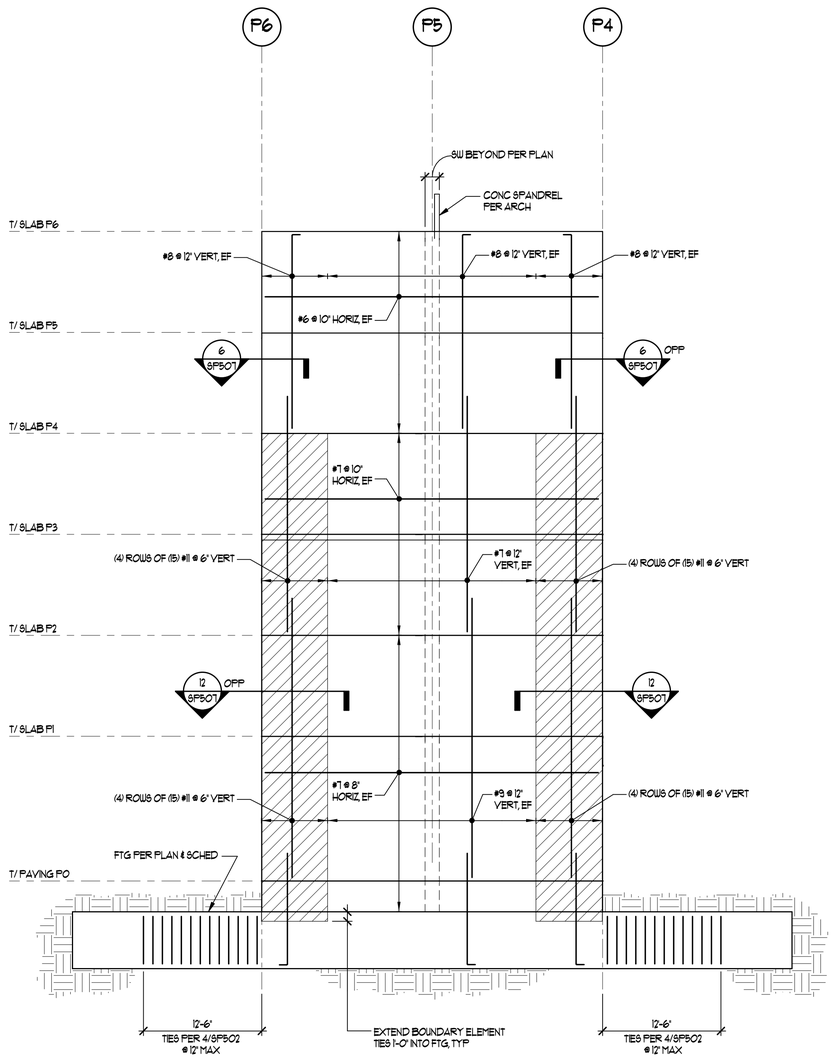

30" THICK

GRID PL - SW-3 ELEVATION 1
1/8" = 1'-0"

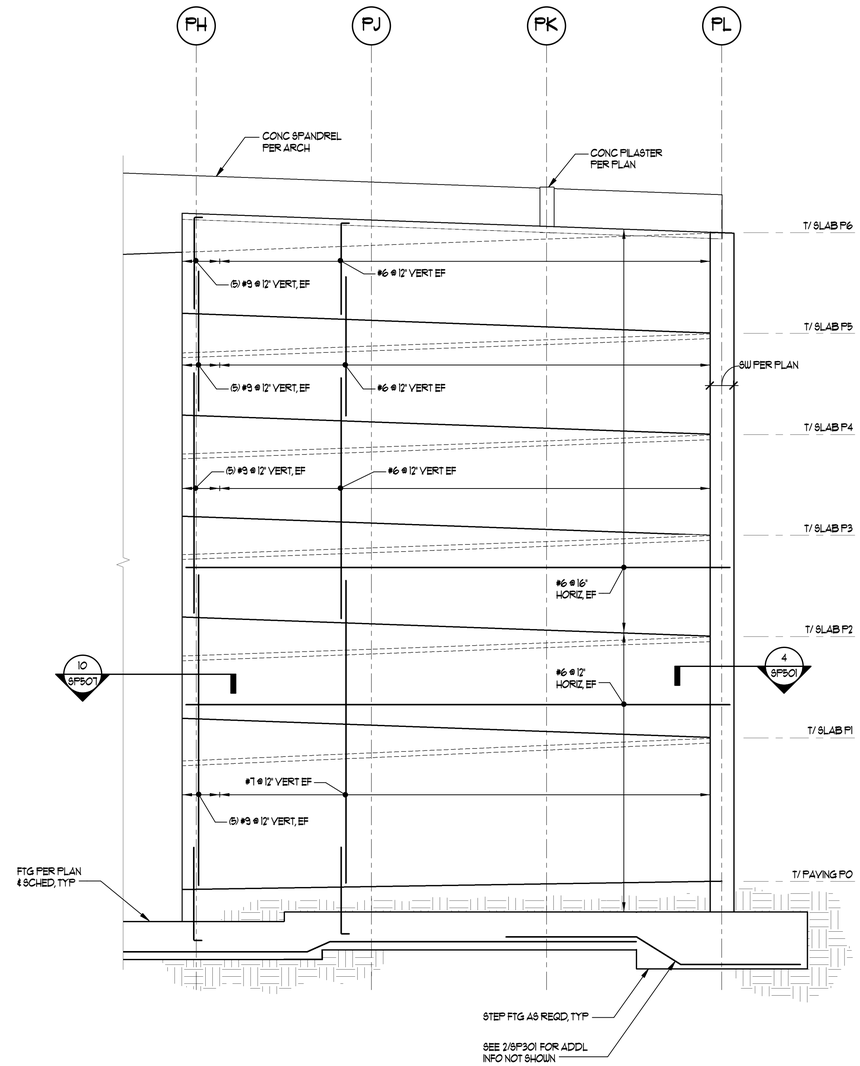

18" THICK

GRID P5 - SW-4 ELEVATION 2
1/8" = 1'-0"

RECORD DRAWINGS

RECORD DRAWING

THESE RECORD DRAWINGS HAVE BEEN PREPARED FROM CONTRACTOR FURNISHED INFORMATION. THERE IS NO GUARANTEE AS TO THE ACCURACY OR COMPLETENESS OF THE INFORMATION CONTAINED HEREIN. RMI WAS NOT RETAINED TO VERIFY THE FIELD CONDITIONS.

COURTNEY WILLOUGHBY
DATE: 12/24/18
REID MIDDLETON INC.

KUMIN
ARCHITECTURE INTERIORS PLANNING
888 E STREET, STE 200 ANCHORAGE, AK 99501
T 907.272.8833 KUMINALASKA.COM

NEESER CONSTRUCTION, INC.
Reid Middleton
4300 B St., Suite 302 Anchorage, AK 99503
Phone: 907 562-3439 - www.reidmiddleton.com
Corporate License #AECC598

© Copyright Reid Middleton, Inc. 2017

Childrens Dental Clinic Building

4441 Diplomacy Drive, Anchorage AK 99508
Southcentral Foundation

No.	Description	Date

Drawn By: RLC
Checked By: SES
Date: 24 DEC 2018
Phase: RECORD DRAWINGS
Job No: 402016.015
SHEET TITLE: SHEAR WALL ELEVATIONS
SHEET NO: SP302

C:\Users\gbagnski\Documents\SCF CDC Garage_Structural RECORD DWGS_2015_gbagnski.rvt
12/21/2018 3:46:55 PM

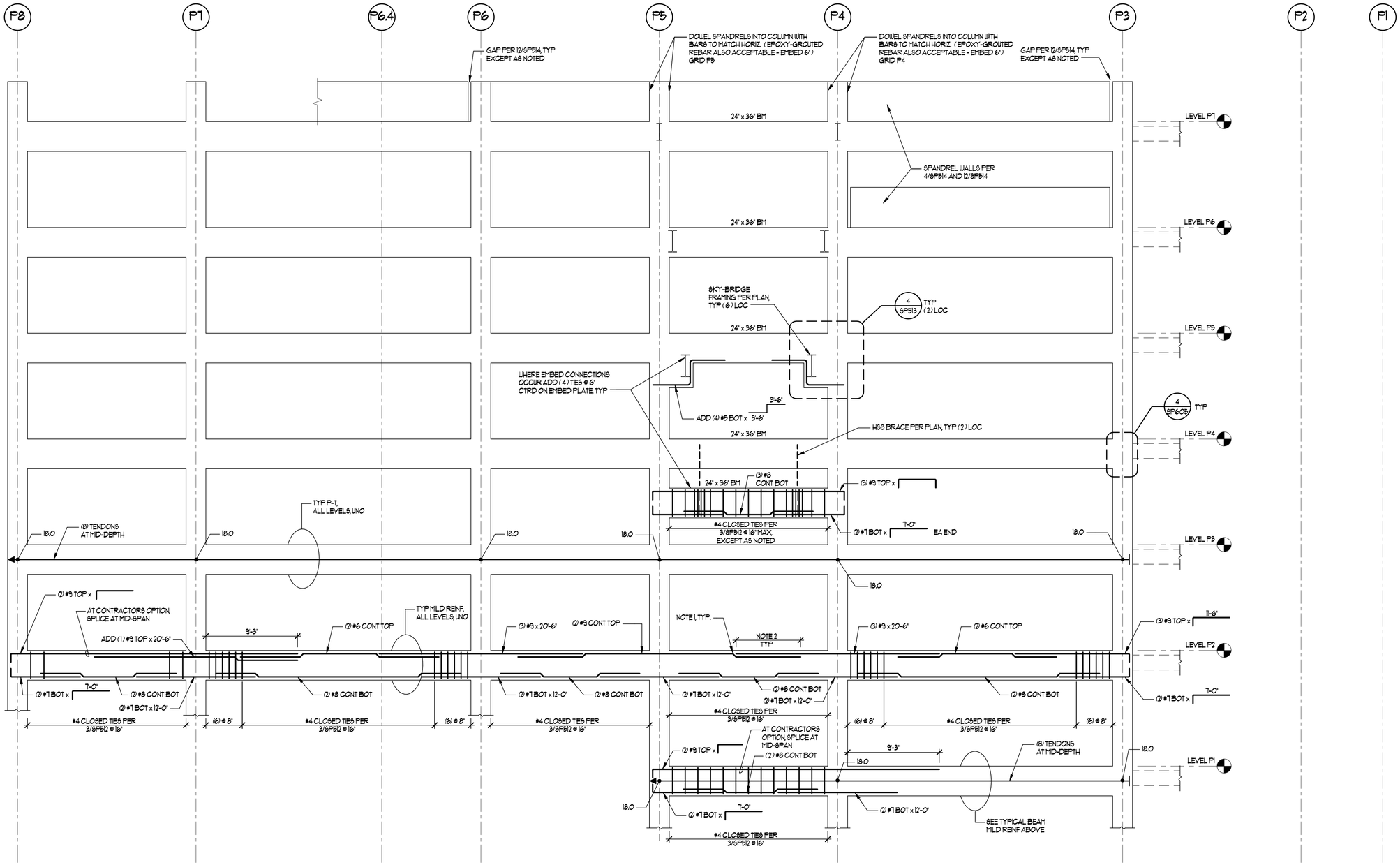

BEAM ELEVATION NOTES:

1. OFFSET BENDS SHOWN AT ENDS OF CONTINUOUS STRAIGHT BARS ARE SHOWN FOR CLARITY ONLY. CONTRACTOR MAY PROVIDE STRAIGHT BARS WITHOUT BENDS.
2. SPLICE REINF. PER SCHEDULE OF DETAIL 12/SP502, TYP. UNO.
3. SEE SHEETS SP512 AND SP513 FOR TYPICAL BEAM DETAILS.
4. CORE DRILLING OR ROTO-HAMMERING OF PT SLABS OR BEAMS IS NOT PERMITTED WITHOUT ENGINEER APPROVAL. SEE TYPICAL POST-TENSIONING NOTES.

FRAMING ELEVATION 1
3/16" = 1'-0"

RECORD DRAWINGS

RECORD DRAWING
THESE RECORD DRAWINGS HAVE BEEN PREPARED FROM CONTRACTOR FURNISHED INFORMATION. THERE IS NO GUARANTEE AS TO THE ACCURACY OR COMPLETENESS OF THE INFORMATION CONTAINED HEREIN. RMI WAS NOT RETAINED TO VERIFY THE FIELD CONDITIONS.
COURTNEY WILLOUGHBY
DATE: 12/24/18
REID MIDDLETON INC.

KUMIN
ARCHITECTURE INTERIORS PLANNING
1901 STEELE STREET, STE 200 ANCHORAGE, AK 99503
907.272.5363 KUMIN.COM

NEESER CONSTRUCTION, INC.
Reid Middleton
4300 B St., Suite 302 Anchorage, AK 99503
Phone: 907.562.3439 - www.reidmiddleton.com
Corporate License #AECC598
© Copyright Reid Middleton, Inc. 2017

Childrens Dental Clinic Building

4441 Diplomacy Drive, Anchorage AK 99508
Southcentral Foundation

No.	Description	Date

Drawn By: RLC
Checked By: SES
Date: 24 DEC 2018
Phase: RECORD DRAWINGS
Job No: 402016.015
SHEET TITLE: BEAM ELEVATION GRID PA

SHEET NO:
SP303

C:\Users\rlaughlin\Documents\SCF CDC Design_Structural RECORD DWGS_2015_plangrate.rvt
12/27/2018 3:45:56 PM

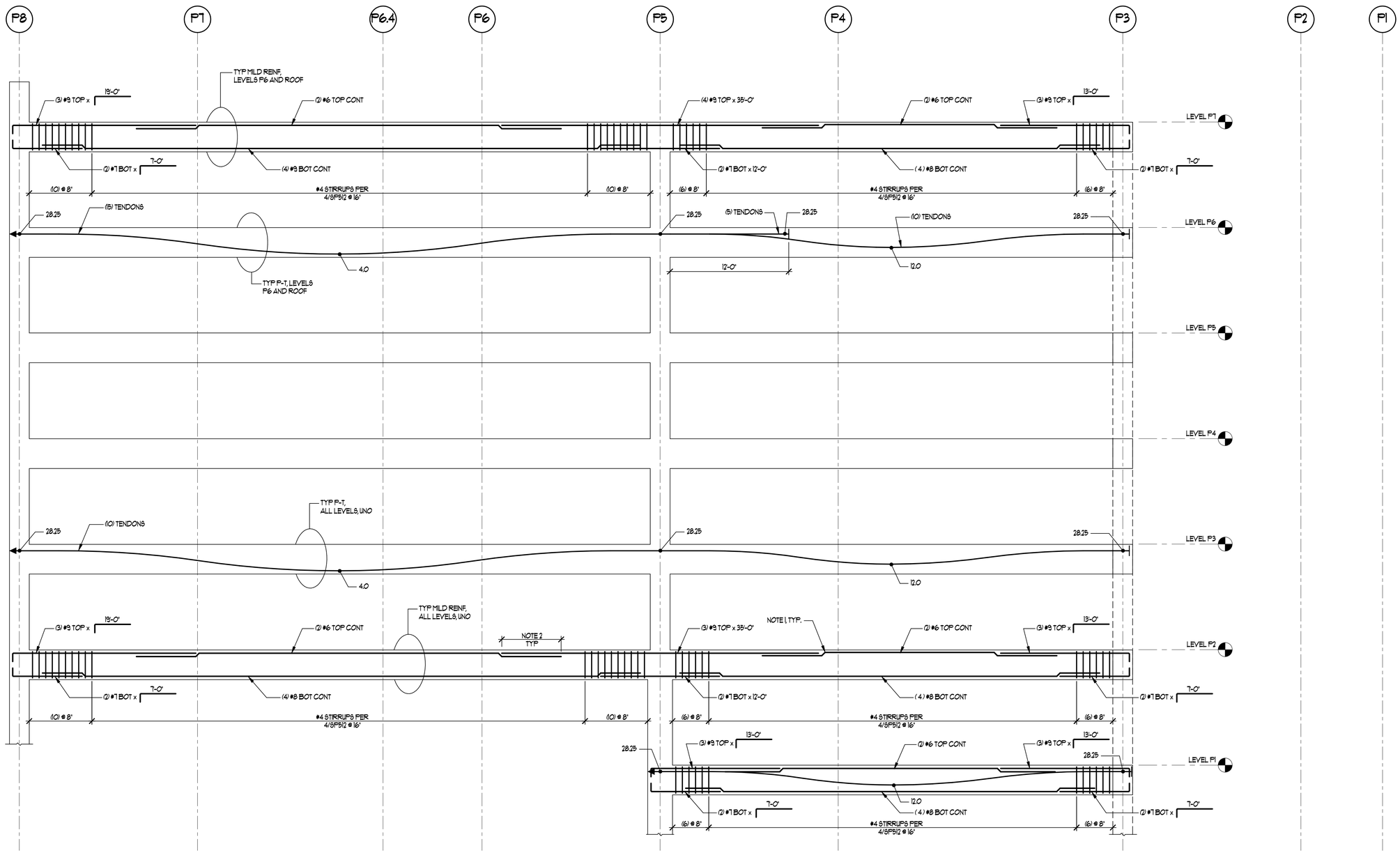

BEAM ELEVATION NOTES:

1. OFFSET BENDS SHOWN AT ENDS OF CONTINUOUS STRAIGHT BARS ARE SHOWN FOR CLARITY ONLY. CONTRACTOR MAY PROVIDE STRAIGHT BARS WITHOUT BENDS.
2. SPLICE REINF. PER SCHEDULE OF DETAIL12/SP502, TYP. UNO.
3. SEE SHEETS SP512 AND SP513 FOR TYPICAL BEAM DETAILS.
4. CORE DRILLING OR ROTO-HAMMERING OF PT SLABS OR BEAMS IS NOT PERMITTED WITHOUT ENGINEER APPROVAL. SEE TYPICAL POST-TENSIONING NOTES.

FRAMING ELEVATION 1
3/16" = 1'-0"

RECORD DRAWINGS

RECORD DRAWING

THESE RECORD DRAWINGS HAVE BEEN PREPARED FROM CONTRACTOR FURNISHED INFORMATION. THERE IS NO GUARANTEE AS TO THE ACCURACY OR COMPLETENESS OF THE INFORMATION CONTAINED HEREIN. RMI WAS NOT RETAINED TO VERIFY THE FIELD CONDITIONS.

COURTNEY WILLOUGHBY
DATE: 12/24/18
REID MIDDLETON INC.

KUMIN
ARCHITECTURE INTERIORS PLANNING
1901 STARSET ST. SUITE 200 ANCHORAGE, AK 99501
907.272.5363 KUMIN.COM

NEESER CONSTRUCTION, INC.

Reid Middleton
4300 B St., Suite 302 Anchorage, AK 99503
Phone: 907.562.3439 - www.reidmiddleton.com
Corporate License #AECC598
© Copyright Reid Middleton, Inc. 2017

Childrens Dental Clinic Building

4441 Diplomacy Drive, Anchorage AK 99508
Southcentral Foundation

No.	Description	Date

Drawn By: RLC
Checked By: SES
Date: 24 DEC 2018
Phase: RECORD DRAWINGS
Job No: 402016.015
SHEET TITLE: BEAM ELEVATION GRID PB

SHEET NO: SP304

C:\Users\plaugman\Documents\SCP CDC Garage_Structural RECORD DWGS_2015_plaugman.rvt
12/21/2018 3:44:57 PM

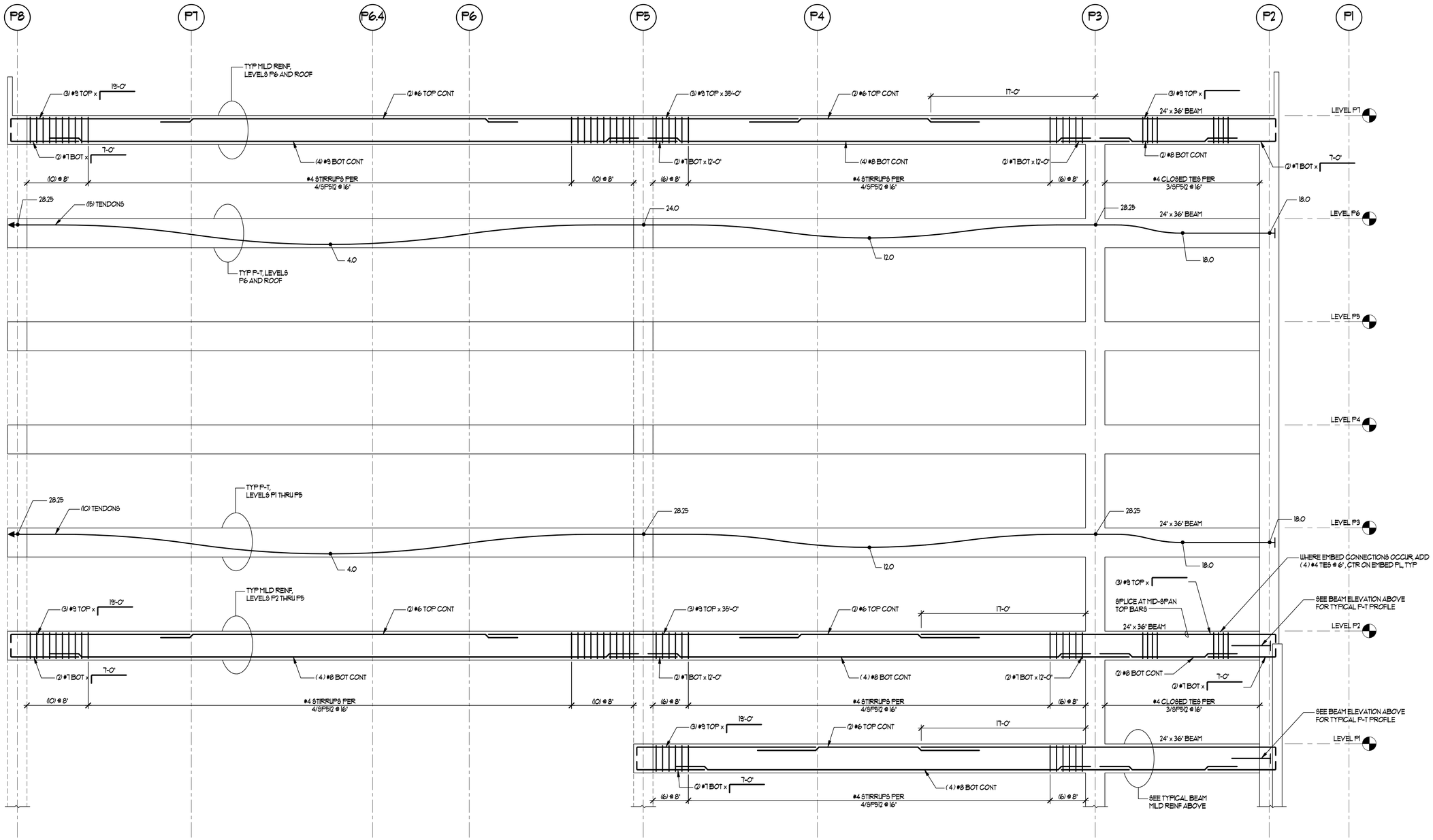

FRAMING ELEVATION 1

3/16" = 1'-0"

BEAM ELEVATION NOTES:

1. OFFSET BENDS SHOWN AT ENDS OF CONTINUOUS STRAIGHT BARS ARE SHOWN FOR CLARITY ONLY. CONTRACTOR MAY PROVIDE STRAIGHT BARS WITHOUT BENDS.
2. SPLICE REINF. PER SCHEDULE OF DETAIL12/SP502, TYP, UNO.
3. SEE SHEETS SP512 AND SP513 FOR TYPICAL BEAM DETAILS.
4. CORE DRILLING OR ROTO-HAMMERING OF PT SLABS OR BEAMS IS NOT PERMITTED WITHOUT ENGINEER APPROVAL. SEE TYPICAL POST-TENSIONING NOTES.

RECORD DRAWING

THESE RECORD DRAWINGS HAVE BEEN PREPARED FROM CONTRACTOR FURNISHED INFORMATION. THERE IS NO GUARANTEE AS TO THE ACCURACY OR COMPLETENESS OF THE INFORMATION CONTAINED HEREIN. RMI WAS NOT RETAINED TO VERIFY THE FIELD CONDITIONS.

COURTNEY WILLOUGHBY
DATE: 12/24/18
REID MIDDLETON INC.

KUMIN
ARCHITECTURE INTERIORS PLANNING
1901 STEELE STREET, STE.200 ANCHORAGE, AK
907.272.5383 KUMINAK.COM

NEESER CONSTRUCTION, INC.
Reid Middleton
4300 B St., Suite 302 Anchorage, AK 99503
Phone: 907.562.3439 - www.reidmiddleton.com
Corporate License #AECC598
© Copyright Reid Middleton, Inc. 2017

Childrens Dental Clinic Building

4441 Diplomacy Drive, Anchorage AK 99508

Southcentral Foundation

No.	Description	Date

Drawn By: RLC
Checked By: SES
Date: 24 DEC 2018
Phase: RECORD DRAWINGS
Job No: 402016.015
SHEET TITLE: BEAM ELEVATION GRID PB.5
SHEET NO: SP305

C:\Users\rlaughman\Documents\SCF CDC Garage_Structural RECORD DWGS_2015_plaughman.rvt
12/27/2018 3:46:58 PM

RECORD DRAWINGS

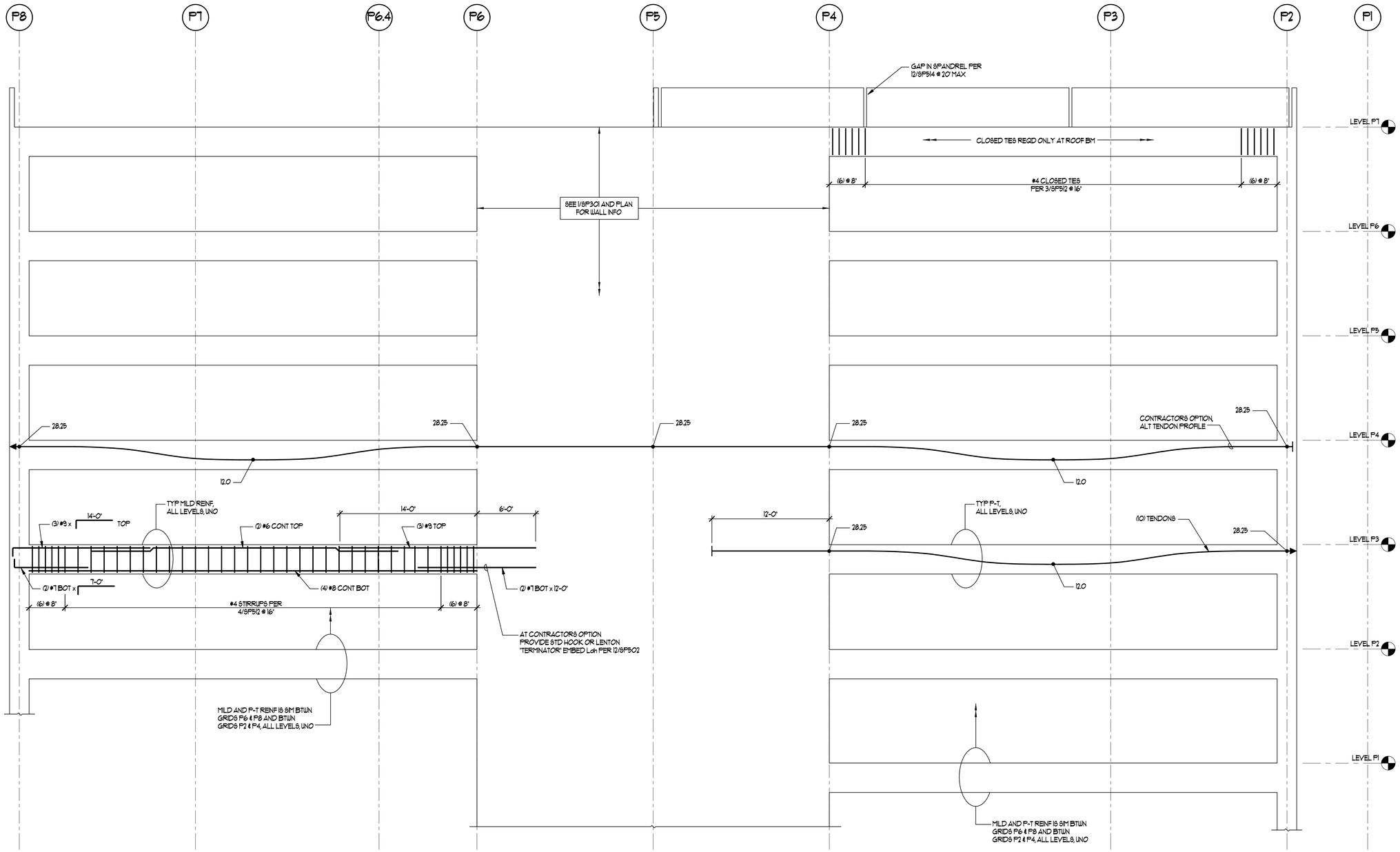

BEAM ELEVATION NOTES:

1. OFFSET BENDS SHOWN AT ENDS OF CONTINUOUS STRAIGHT BARS ARE SHOWN FOR CLARITY ONLY. CONTRACTOR MAY PROVIDE STRAIGHT BARS WITHOUT BENDS.
2. SPLICE REINF. PER SCHEDULE OF DETAIL12/SF502, TYP. UNO.
3. SEE SHEETS SF512 AND SF513 FOR TYPICAL BEAM DETAILS.
4. CORE DRILLING OR ROTO-HAMMERING OF PT SLABS OR BEAMS IS NOT PERMITTED WITHOUT ENGINEER APPROVAL. SEE TYPICAL POST-TENSIONING NOTES.

FRAMING ELEVATION 1

NTS

RECORD DRAWINGS

RECORD DRAWING

THESE RECORD DRAWINGS HAVE BEEN PREPARED FROM CONTRACTOR FURNISHED INFORMATION. THERE IS NO GUARANTEE AS TO THE ACCURACY OR COMPLETENESS OF THE INFORMATION CONTAINED HEREIN. RMI WAS NOT RETAINED TO VERIFY THE FIELD CONDITIONS.

COURTNEY WILLOUGHBY
DATE: 12/24/18
REID MIDDLETON INC.

KUMIN
ARCHITECTURE INTERIORS PLANNING
1901 STREET, STE.200 ANCHORAGE, AK 99501
907.272.5561 KUMIN.COM

NEESER CONSTRUCTION, INC.
Reid Middleton
4300 B St., Suite 302 Anchorage, AK 99503
Phone: 907.562.3439 - www.reidmiddleton.com
Corporate License #AECC598
© Copyright Reid Middleton, Inc. 2017

Childrens Dental Clinic Building

4441 Diplomacy Drive, Anchorage AK 99508
Southcentral Foundation

No.	Description	Date

Drawn By: RLC
Checked By: SES
Date: 24 DEC 2018
Phase: RECORD DRAWINGS
Job No: 402016.015
SHEET TITLE: BEAM ELEVATION GRID PC

SHEET NO: SP306

C:\Users\jsagnes\Documents\SCF CDC Garage_Structural RECORD DWGS_2019_jsagnes.rvt
12/21/2018 3:44:59 PM

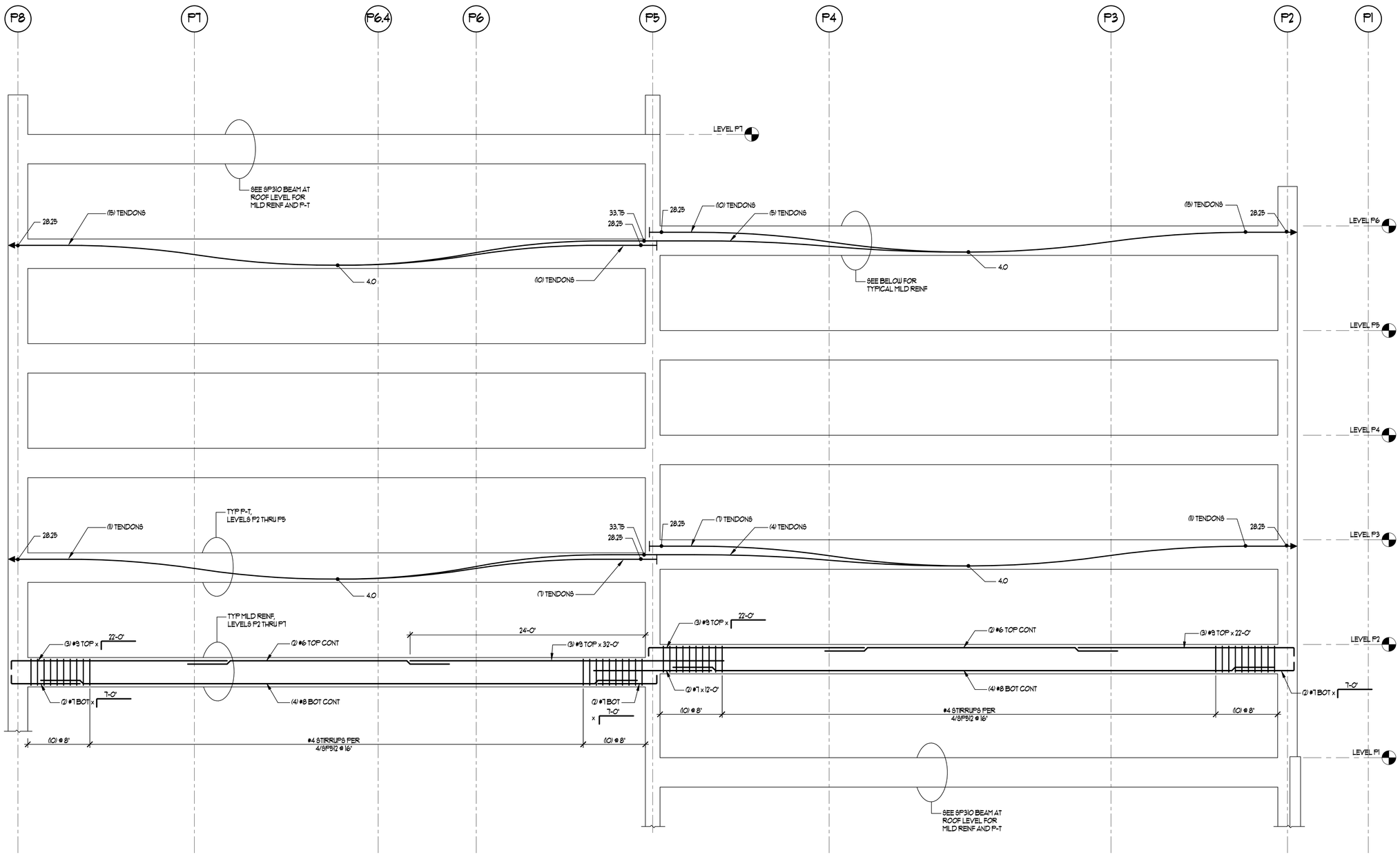

BEAM ELEVATION NOTES:

1. OFFSET BENDS SHOWN AT ENDS OF CONTINUOUS STRAIGHT BARS ARE SHOWN FOR CLARITY ONLY. CONTRACTOR MAY PROVIDE STRAIGHT BARS WITHOUT BENDS.
2. SPLICE REINF. PER SCHEDULE OF DETAIL12/SP502, TYP. UNO.
3. SEE SHEETS SP512 AND SP513 FOR TYPICAL BEAM DETAILS.
4. CORE DRILLING OR ROTO-HAMMERING OF PT SLABS OR BEAMS IS NOT PERMITTED WITHOUT ENGINEER APPROVAL. SEE TYPICAL POST-TENSIONING NOTES.

FRAMING ELEVATION 1
3/16" = 1'-0"

RECORD DRAWING
THESE RECORD DRAWINGS HAVE BEEN PREPARED FROM CONTRACTOR FURNISHED INFORMATION. THERE IS NO GUARANTEE AS TO THE ACCURACY OR COMPLETENESS OF THE INFORMATION CONTAINED HEREIN. RMI WAS NOT RETAINED TO VERIFY THE FIELD CONDITIONS.
COURTNEY WILLOUGHBY
DATE: 12/24/18
REID MIDDLETON INC.

KUMIN
ARCHITECTURE INTERIORS PLANNING
8181 E STREET, STE 200 ANCHORAGE, AK 99501
T 907.272.8833 KUMINALASKA.COM

NEESER CONSTRUCTION, INC.
Reid Middleton
4300 B St., Suite 302, Anchorage, AK 99503
Phone: 907.562.3439 - www.reidmiddleton.com
Corporate License #AECC598

© Copyright Reid Middleton, Inc. 2017

Childrens Dental Clinic Building
4441 Diplomacy Drive, Anchorage AK 99508
Southcentral Foundation

No.	Description	Date

Drawn By: RLC
Checked By: SES
Date: 24 DEC 2018
Phase: RECORD DRAWINGS
Job No: 402016.015
SHEET TITLE: BEAM ELEVATION GRID PD
SHEET NO: SP307

C:\Users\gbagnski\Documents\SCF CDC Garage_Structural RECORD DWGS_2015_gbagnski.rvt
12/21/2018 3:47:00 PM

RECORD DRAWINGS

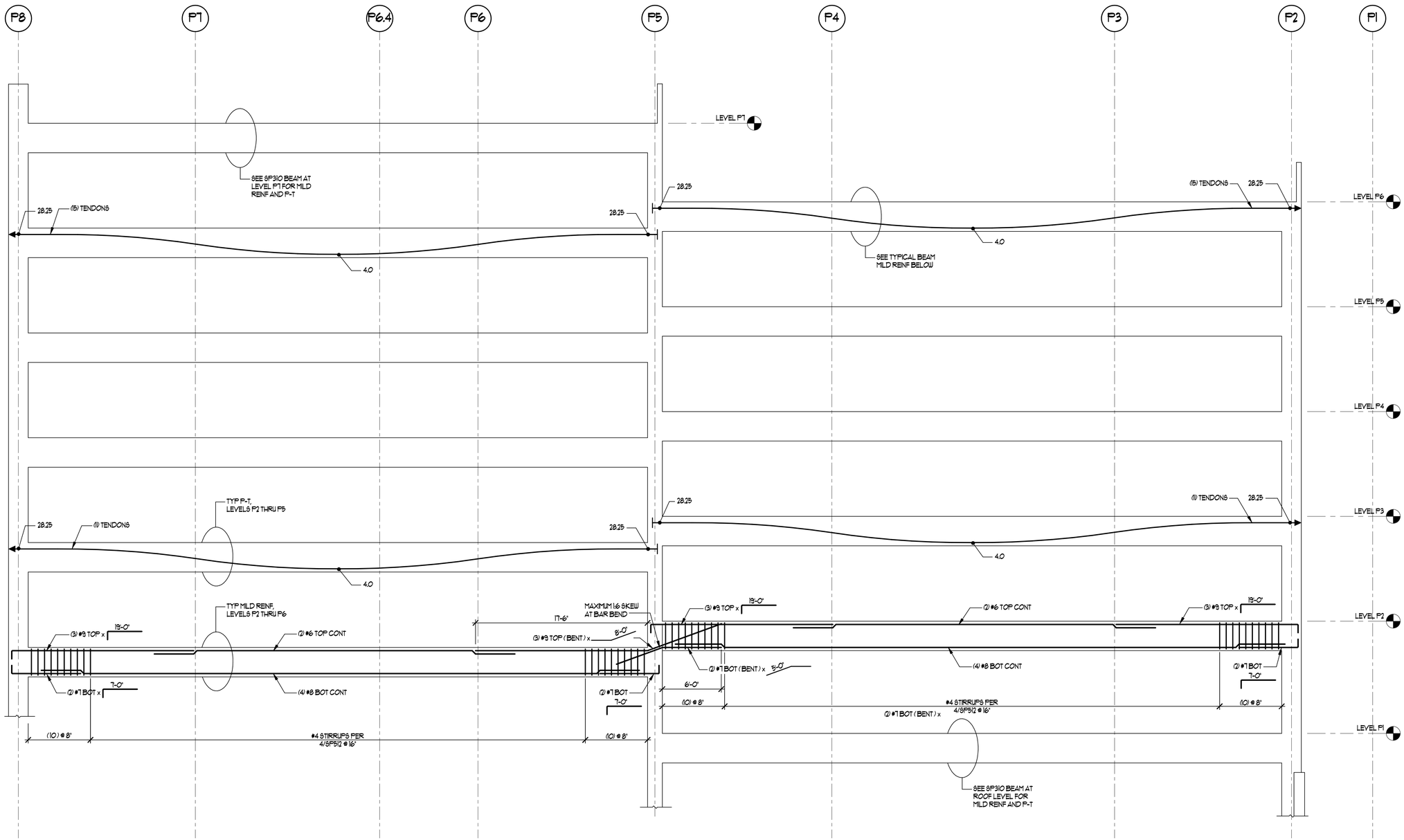

BEAM ELEVATION NOTES:

1. OFFSET BENDS SHOWN AT ENDS OF CONTINUOUS STRAIGHT BARS ARE SHOWN FOR CLARITY ONLY. CONTRACTOR MAY PROVIDE STRAIGHT BARS WITHOUT BENDS.
2. SPLICE REINF. PER SCHEDULE OF DETAIL12/SP502, TYP. UNO.
3. SEE SHEETS SP512 AND SP513 FOR TYPICAL BEAM DETAILS.
4. CORE DRILLING OR ROTO-HAMMERING OF PT SLABS OR BEAMS IS NOT PERMITTED WITHOUT ENGINEER APPROVAL. SEE TYPICAL POST-TENSIONING NOTES.

FRAMING ELEVATION 1
3/16" = 1'-0"

RECORD DRAWINGS

RECORD DRAWING

THESE RECORD DRAWINGS HAVE BEEN PREPARED FROM CONTRACTOR FURNISHED INFORMATION. THERE IS NO GUARANTEE AS TO THE ACCURACY OR COMPLETENESS OF THE INFORMATION CONTAINED HEREIN. RMI WAS NOT RETAINED TO VERIFY THE FIELD CONDITIONS.

COURTNEY WILLOUGHBY
DATE: 12/24/18
REID MIDDLETON INC.

KUMIN
ARCHITECTURE INTERIORS PLANNING
1901 ROSE STREET, SUITE 200 ANCHORAGE, ALASKA 99503
907.272.5383 KUMINAK.COM

NEESER CONSTRUCTION, INC.
Reid Middleton
4300 B St., Suite 302 Anchorage, AK 99503
Phone: 907.562.3439 - www.reidmiddleton.com
Corporate License #AECC598
© Copyright Reid Middleton, Inc. 2017

Childrens Dental Clinic Building

4441 Diplomacy Drive, Anchorage AK 99508
Southcentral Foundation

No.	Description	Date

Drawn By: RLC
Checked By: SES
Date: 24 DEC 2018
Phase: RECORD DRAWINGS
Job No: 402016.015
SHEET TITLE: BEAM ELEVATION GRID PE
SHEET NO: SP308

C:\Users\plangner\Documents\SCF CDC Carriage_Structural RECORD DWGS_2015_plangner.rvt
12/21/2018 3:47:00 PM

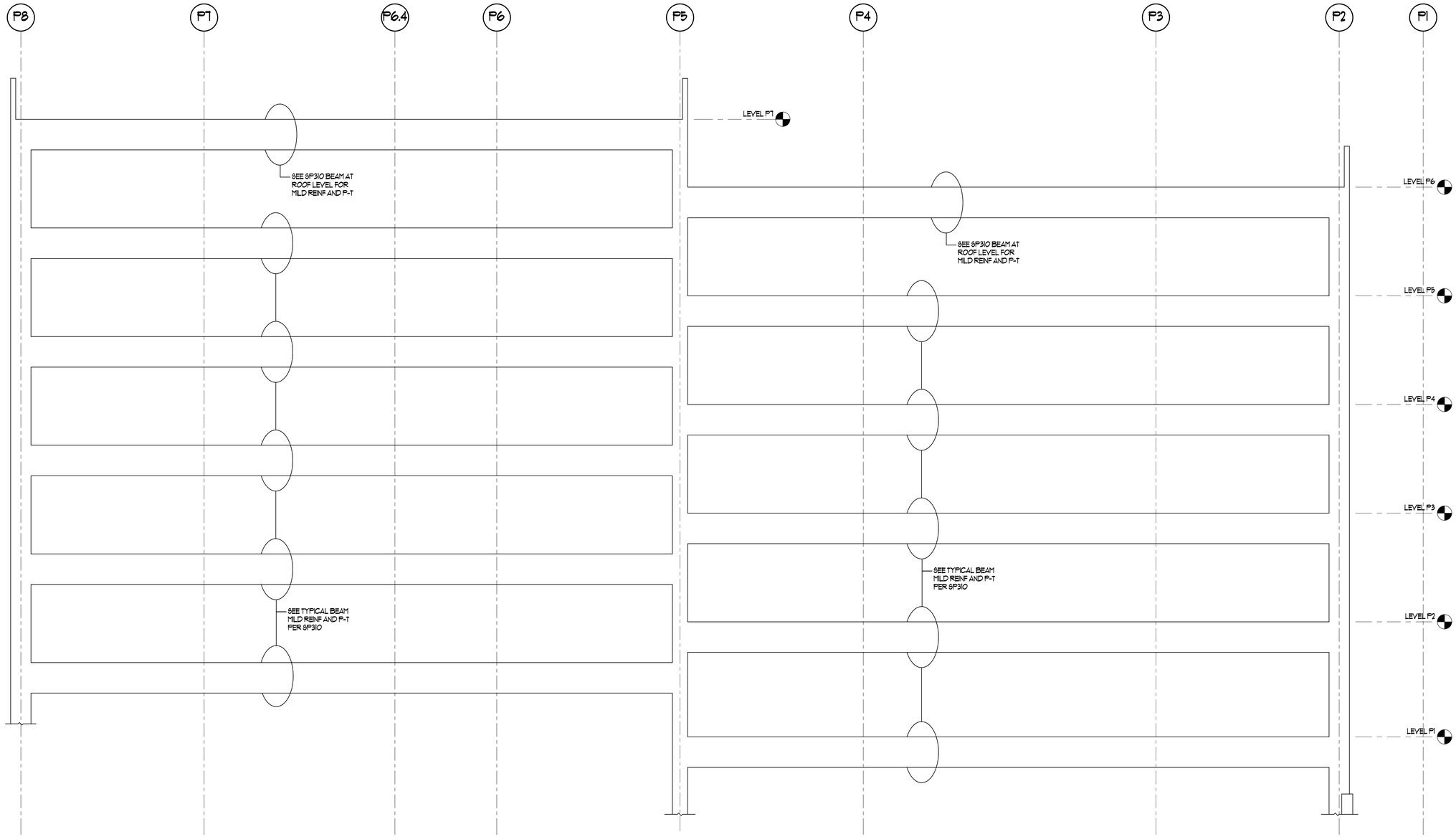

BEAM ELEVATION NOTES:

1. OFFSET BENDS SHOWN AT ENDS OF CONTINUOUS STRAIGHT BARS ARE SHOWN FOR CLARITY ONLY. CONTRACTOR MAY PROVIDE STRAIGHT BARS WITHOUT BENDS.
2. SPLICE REINF. PER SCHEDULE OF DETAIL12/SP502, TYP. UNO.
3. SEE SHEETS SP512 AND SP513 FOR TYPICAL BEAM DETAILS.
4. CORE DRILLING OR ROTO-HAMMERING OF PT SLABS OR BEAMS IS NOT PERMITTED WITHOUT ENGINEER APPROVAL. SEE TYPICAL POST-TENSIONING NOTES.

FRAMING ELEVATION 1
3/16" = 1'-0"

RECORD DRAWINGS

RECORD DRAWING

THESE RECORD DRAWINGS HAVE BEEN PREPARED FROM CONTRACTOR FURNISHED INFORMATION. THERE IS NO GUARANTEE AS TO THE ACCURACY OR COMPLETENESS OF THE INFORMATION CONTAINED HEREIN. RMI WAS NOT RETAINED TO VERIFY THE FIELD CONDITIONS.

COURTNEY WILLOUGHBY
DATE: 12/24/18
REID MIDDLETON INC.

KUMIN
ARCHITECTURE INTERIORS PLANNING
1901 STEELE STREET, STE.200 ANCHORAGE, AK 99503
907.272.5363 KUMIN.COM

NEESER CONSTRUCTION, INC.
Reid Middleton
4300 B St., Suite 302 Anchorage, AK 99503
Phone: 907.562.3439 - www.reidmiddleton.com
Corporate License #AECC598
© Copyright Reid Middleton, Inc. 2017

Childrens Dental Clinic Building

4441 Diplomacy Drive, Anchorage AK 99508
Southcentral Foundation

No.	Description	Date

Drawn By: RLC
Checked By: SES
Date: 24 DEC 2018
Phase: RECORD DRAWINGS
Job No: 402016.015
SHEET TITLE: BEAM ELEVATION GRID PF

SHEET NO:
SP309

C:\Users\glagnier\Documents\SCF CDC Garage_Structural RECORD DWGS_2015_glagnier.rvt
12/27/2018 3:47:01 PM

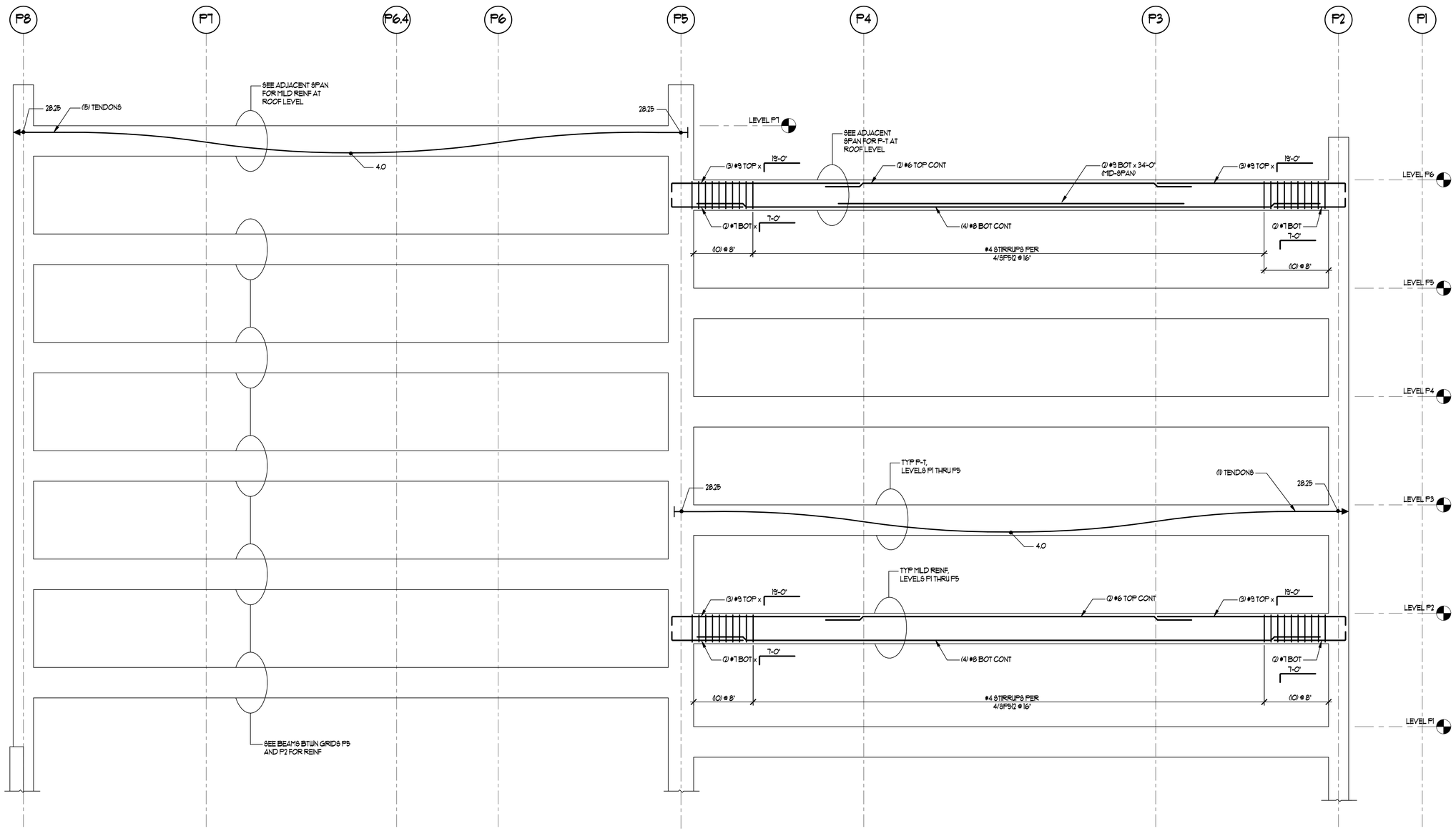

BEAM ELEVATION NOTES:

1. OFFSET BENDS SHOWN AT ENDS OF CONTINUOUS STRAIGHT BARS ARE SHOWN FOR CLARITY ONLY. CONTRACTOR MAY PROVIDE STRAIGHT BARS WITHOUT BENDS.
2. SPLICE REINF. PER SCHEDULE OF DETAIL 12/SPS02, TYP. UNO.
3. SEE SHEETS SPS12 AND SPS13 FOR TYPICAL BEAM DETAILS.
4. CORE DRILLING OR ROTO-HAMMERING OF PT SLABS OR BEAMS IS NOT PERMITTED WITHOUT ENGINEER APPROVAL. SEE TYPICAL POST-TENSIONING NOTES.

FRAMING ELEVATION 1
3/16" = 1'-0"

RECORD DRAWINGS

RECORD DRAWING

THESE RECORD DRAWINGS HAVE BEEN PREPARED FROM CONTRACTOR FURNISHED INFORMATION. THERE IS NO GUARANTEE AS TO THE ACCURACY OR COMPLETENESS OF THE INFORMATION CONTAINED HEREIN. RMI WAS NOT RETAINED TO VERIFY THE FIELD CONDITIONS.

COURTNEY WILLOUGHBY
DATE: 12/24/18
REID MIDDLETON INC.

KUMIN
ARCHITECTURE INTERIORS PLANNING
1901 STREET, STE.200 ANCHORAGE, AK 99501
907.272.5363 KUMIN.COM

NEESER CONSTRUCTION, INC.
Reid Middleton
4300 B St., Suite 302 Anchorage, AK 99503
Phone: 907.562.3439 - www.reidmiddleton.com
Corporate License #AECC598
© Copyright Reid Middleton, Inc. 2017

Childrens Dental Clinic Building

4441 Diplomacy Drive, Anchorage AK 99508
Southcentral Foundation

No.	Description	Date

Drawn By: RLC
Checked By: SES
Date: 24 DEC 2018
Phase: RECORD DRAWINGS
Job No: 402016.015
SHEET TITLE: BEAM ELEVATION GRID PG

SHEET NO:
SP310

C:\Users\plagman\Documents\SCF CDC Garage_Structural RECORD DWGS_2015_plagman.rvt
12/21/2018 3:47:02 PM

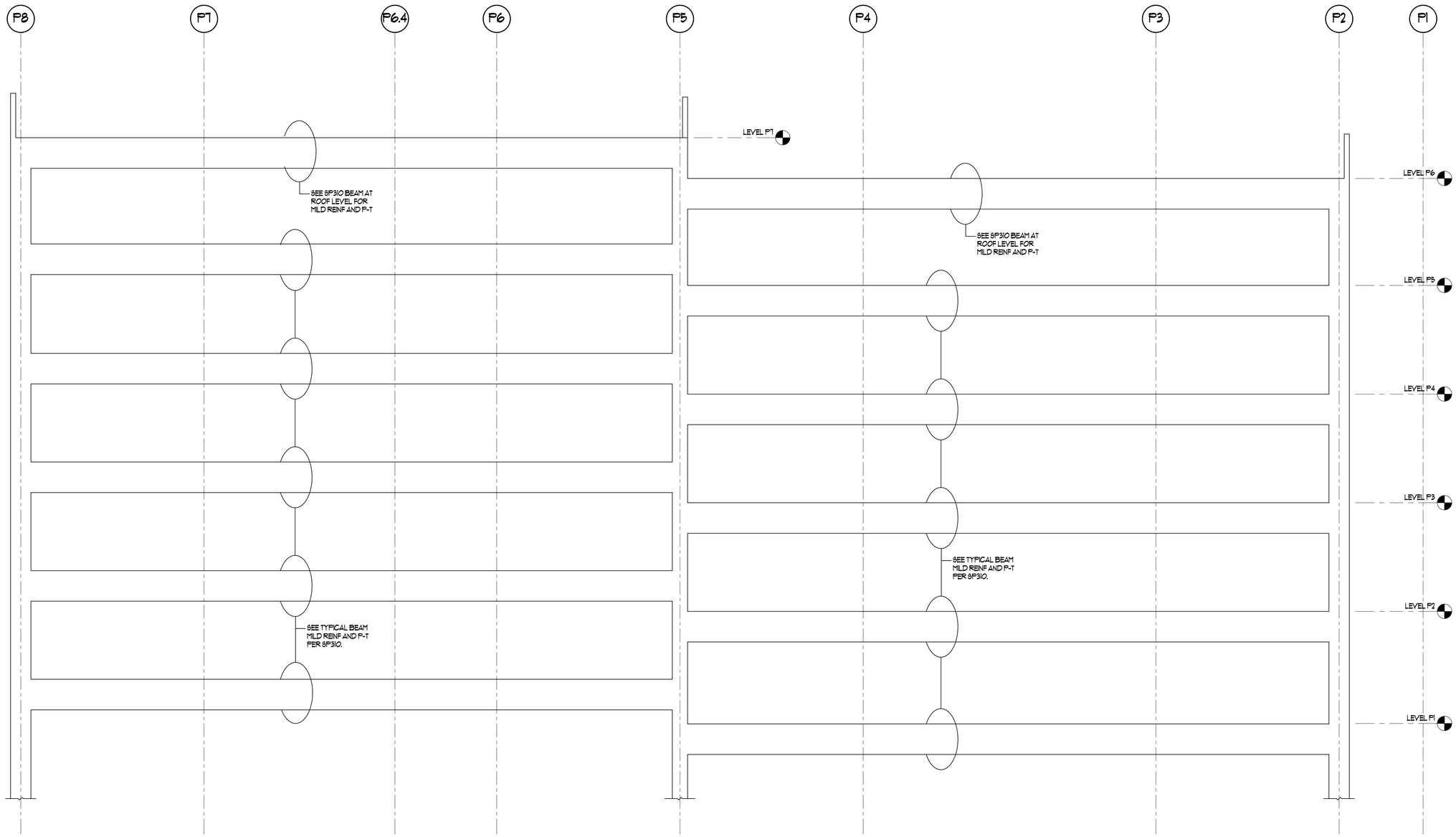

BEAM ELEVATION NOTES:

1. OFFSET BENDS SHOWN AT ENDS OF CONTINUOUS STRAIGHT BARS ARE SHOWN FOR CLARITY ONLY. CONTRACTOR MAY PROVIDE STRAIGHT BARS WITHOUT BENDS.
2. SPLICE REINF. PER SCHEDULE OF DETAIL2/SP502, TYP. UNO.
3. SEE SHEETS SP512 AND SP513 FOR TYPICAL BEAM DETAILS.
4. CORE DRILLING OR ROTO-HAMMERING OF PT SLABS OR BEAMS IS NOT PERMITTED WITHOUT ENGINEER APPROVAL. SEE TYPICAL POST-TENSIONING NOTES.

FRAMING ELEVATION 1
3/16" = 1'-0"

RECORD DRAWINGS

RECORD DRAWING

THESE RECORD DRAWINGS HAVE BEEN PREPARED FROM CONTRACTOR FURNISHED INFORMATION. THERE IS NO GUARANTEE AS TO THE ACCURACY OR COMPLETENESS OF THE INFORMATION CONTAINED HEREIN. RMI WAS NOT RETAINED TO VERIFY THE FIELD CONDITIONS.

COURTNEY WILLOUGHBY
DATE: 12/24/18
REID MIDDLETON INC.

KUMIN
ARCHITECTURE INTERIORS PLANNING
1901 STREET, STE.200 ANCHORAGE, AK 99501
907.272.5363 KUMIN.COM

NEESER CONSTRUCTION, INC.
Reid Middleton
4300 B St., Suite 302 Anchorage, AK 99503
Phone: 907 562-3439 - www.reidmiddleton.com
Corporate License #AECC598
© Copyright Reid Middleton, Inc. 2017

Childrens Dental Clinic Building

4441 Diplomacy Drive, Anchorage AK 99508
Southcentral Foundation

No.	Description	Date

Drawn By: RLC
Checked By: SES
Date: 24 DEC 2018
Phase: RECORD DRAWINGS
Job No: 402016.015
SHEET TITLE: BEAM ELEVATION GRID PH
SHEET NO: SP311

C:\Users\glaugner\Documents\SCF CDC Garage_Structural RECORD DWGS_2015_glaugner.rvt
12/21/2018 3:47:02 PM

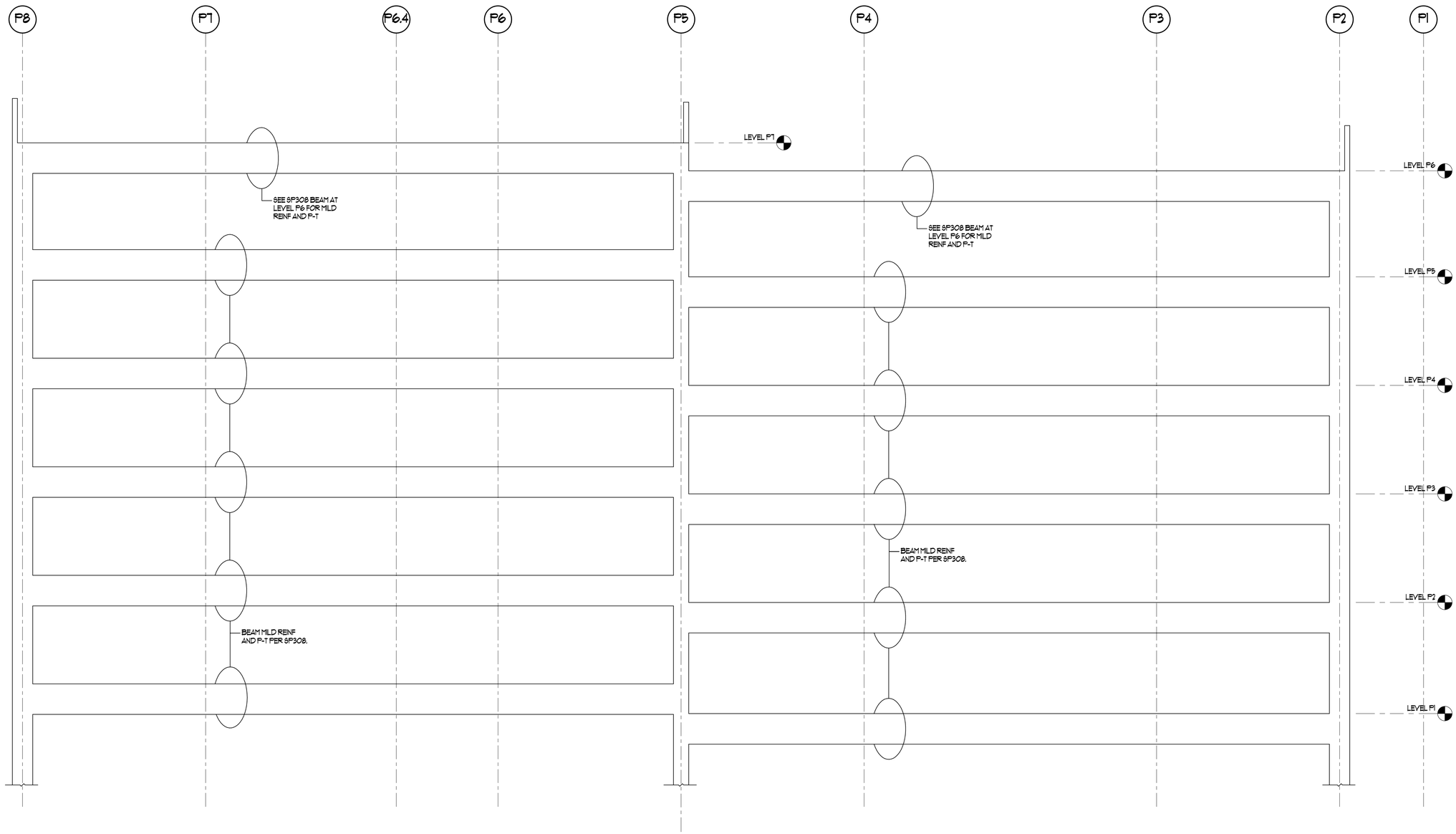

BEAM ELEVATION NOTES:

1. OFFSET BENDS SHOWN AT ENDS OF CONTINUOUS STRAIGHT BARS ARE SHOWN FOR CLARITY ONLY. CONTRACTOR MAY PROVIDE STRAIGHT BARS WITHOUT BENDS.
2. SPLICE REINF. PER SCHEDULE OF DETAIL12/SPS02, TYP. UNO.
3. SEE SHEETS SPS12 AND SPS13 FOR TYPICAL BEAM DETAILS.
4. CORE DRILLING OR ROTO-HAMMERING OF PT SLABS OR BEAMS IS NOT PERMITTED WITHOUT ENGINEER APPROVAL. SEE TYPICAL POST-TENSIONING NOTES.

FRAMING ELEVATION 1
3/16" = 1'-0"

RECORD DRAWINGS

RECORD DRAWING

THESE RECORD DRAWINGS HAVE BEEN PREPARED FROM CONTRACTOR FURNISHED INFORMATION. THERE IS NO GUARANTEE AS TO THE ACCURACY OR COMPLETENESS OF THE INFORMATION CONTAINED HEREIN. RMI WAS NOT RETAINED TO VERIFY THE FIELD CONDITIONS.

COURTNEY WILLOUGHBY
DATE: 12/24/18
REID MIDDLETON INC.

KUMIN
ARCHITECTURE INTERIORS PLANNING
1901 STREET, STE.200 ANCHORAGE, AK 99501
907.272.5383 KUMIN@GCI.COM

NEESER CONSTRUCTION, INC.

Reid Middleton
4300 B St., Suite 302 Anchorage, AK 99503
Phone: 907 562-3439 - www.reidmiddleton.com
Corporate License #AECC598
© Copyright Reid Middleton, Inc. 2017

Childrens Dental Clinic Building

4441 Diplomacy Drive, Anchorage AK 99508
Southcentral Foundation

No.	Description	Date

Drawn By: RLC
Checked By: SES
Date: 24 DEC 2018
Phase: RECORD DRAWINGS
Job No: 402016.015
SHEET TITLE: BEAM ELEVATION GRID PJ
SHEET NO: SP312

C:\Users\jsingerman\Documents\SCF CDC Garage_Structural RECORD DWGS_2015_jsingerman.rvt
12/27/2018 3:47:03 PM

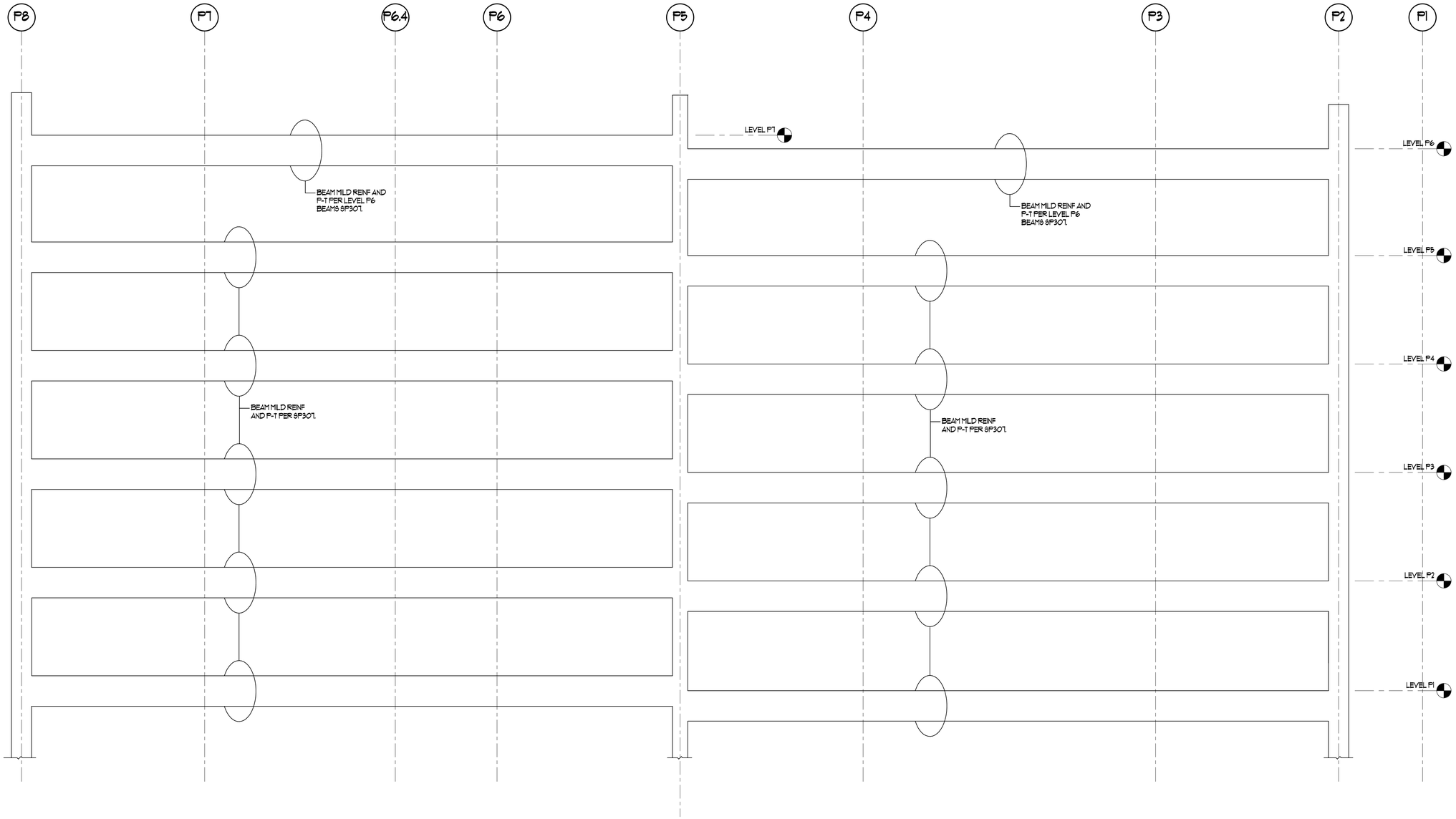

BEAM ELEVATION NOTES:

1. OFFSET BENDS SHOWN AT ENDS OF CONTINUOUS STRAIGHT BARS ARE SHOWN FOR CLARITY ONLY. CONTRACTOR MAY PROVIDE STRAIGHT BARS WITHOUT BENDS.
2. SPLICE REINF. PER SCHEDULE OF DETAIL2/SP502, TYP. UNO.
3. SEE SHEETS SP512 AND SP513 FOR TYPICAL BEAM DETAILS.
4. CORE DRILLING OR ROTO-HAMMERING OF PT SLABS OR BEAMS IS NOT PERMITTED WITHOUT ENGINEER APPROVAL. SEE TYPICAL POST-TENSIONING NOTES.

FRAMING ELEVATION 1
3/16" = 1'-0"

RECORD DRAWINGS

RECORD DRAWING

THESE RECORD DRAWINGS HAVE BEEN PREPARED FROM CONTRACTOR FURNISHED INFORMATION. THERE IS NO GUARANTEE AS TO THE ACCURACY OR COMPLETENESS OF THE INFORMATION CONTAINED HEREIN. RMI WAS NOT RETAINED TO VERIFY THE FIELD CONDITIONS.

COURTNEY WILLOUGHBY
DATE: 12/24/18
REID MIDDLETON INC.

KUMIN
ARCHITECTURE INTERIORS PLANNING
1818 STATE ST. SUITE 200 ANCHORAGE, AK 99501
907.272.5363 KUMIN.COM

NEESER CONSTRUCTION, INC.
Reid Middleton
4300 B St., Suite 302 Anchorage, AK 99503
Phone: 907.562.3439 - www.reidmiddleton.com
Corporate License #AECC598
© Copyright Reid Middleton, Inc. 2017

Childrens Dental Clinic Building

4441 Diplomacy Drive, Anchorage AK 99508
Southcentral Foundation

No.	Description	Date

Drawn By: RLC
Checked By: SES
Date: 24 DEC 2018
Phase: RECORD DRAWINGS
Job No: 402016.015
SHEET TITLE: BEAM ELEVATION GRID PK

SHEET NO: SP313

C:\Users\jpagnes\Documents\SCF CDC Garage_Structural\ RECORD DWGS_2019_jpagnes.rvt
12/21/2018 3:47:03 PM

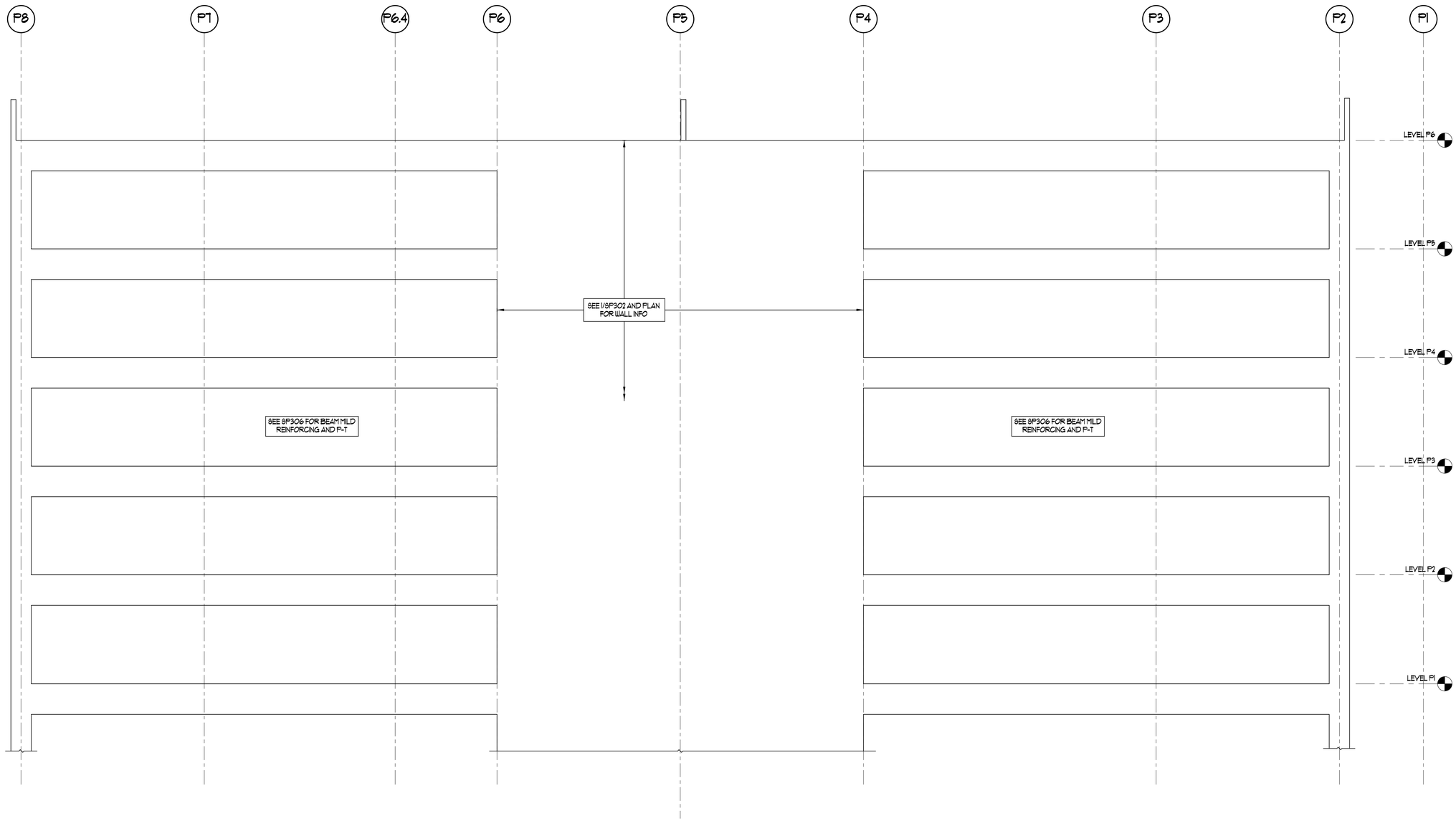

BEAM ELEVATION NOTES:

1. OFFSET BENDS SHOWN AT ENDS OF CONTINUOUS STRAIGHT BARS ARE SHOWN FOR CLARITY ONLY. CONTRACTOR MAY PROVIDE STRAIGHT BARS WITHOUT BENDS.
2. SPLICE REINF. PER SCHEDULE OF DETAIL2/SP502, TYP. UNO.
3. SEE SHEETS SP512 AND SP513 FOR TYPICAL BEAM DETAILS.
4. CORE DRILLING OR ROTO-HAMMERING OF PT SLABS OR BEAMS IS NOT PERMITTED WITHOUT ENGINEER APPROVAL. SEE TYPICAL POST-TENSIONING NOTES.

FRAMING ELEVATION 1
3/16" = 1'-0"

RECORD DRAWINGS

RECORD DRAWING

THESE RECORD DRAWINGS HAVE BEEN PREPARED FROM CONTRACTOR FURNISHED INFORMATION. THERE IS NO GUARANTEE AS TO THE ACCURACY OR COMPLETENESS OF THE INFORMATION CONTAINED HEREIN. RMI WAS NOT RETAINED TO VERIFY THE FIELD CONDITIONS.

COURTNEY WILLOUGHBY
DATE: 12/24/18
REID MIDDLETON INC.

KUMIN
ARCHITECTURE INTERIORS PLANNING
9101 JEWEL LAKE RD, STE 200 ANCHORAGE, AK 99502
907.561.5073 907.561.5075
KUMIN@GCI.NET

NEESER CONSTRUCTION, INC.
Reid Middleton
4300 B St., Suite 302 Anchorage, AK 99503
Phone: 907 562-3439 - www.reidmiddleton.com
Corporate License #AECC598
© Copyright Reid Middleton, Inc. 2017

Childrens Dental Clinic Building

4441 Diplomacy Drive, Anchorage AK 99508
Southcentral Foundation

No.	Description	Date

Drawn By: RLC
Checked By: SES
Date: 24 DEC 2018
Phase: RECORD DRAWINGS
Job No: 402016.015
SHEET TITLE: BEAM ELEVATION GRID PL
SHEET NO: SP314

C:\Users\plaginski\Documents\SCF CDC Garage_Structural RECORD DWGS_2019_plaginski.rvt
12/21/2018 3:47:04 PM

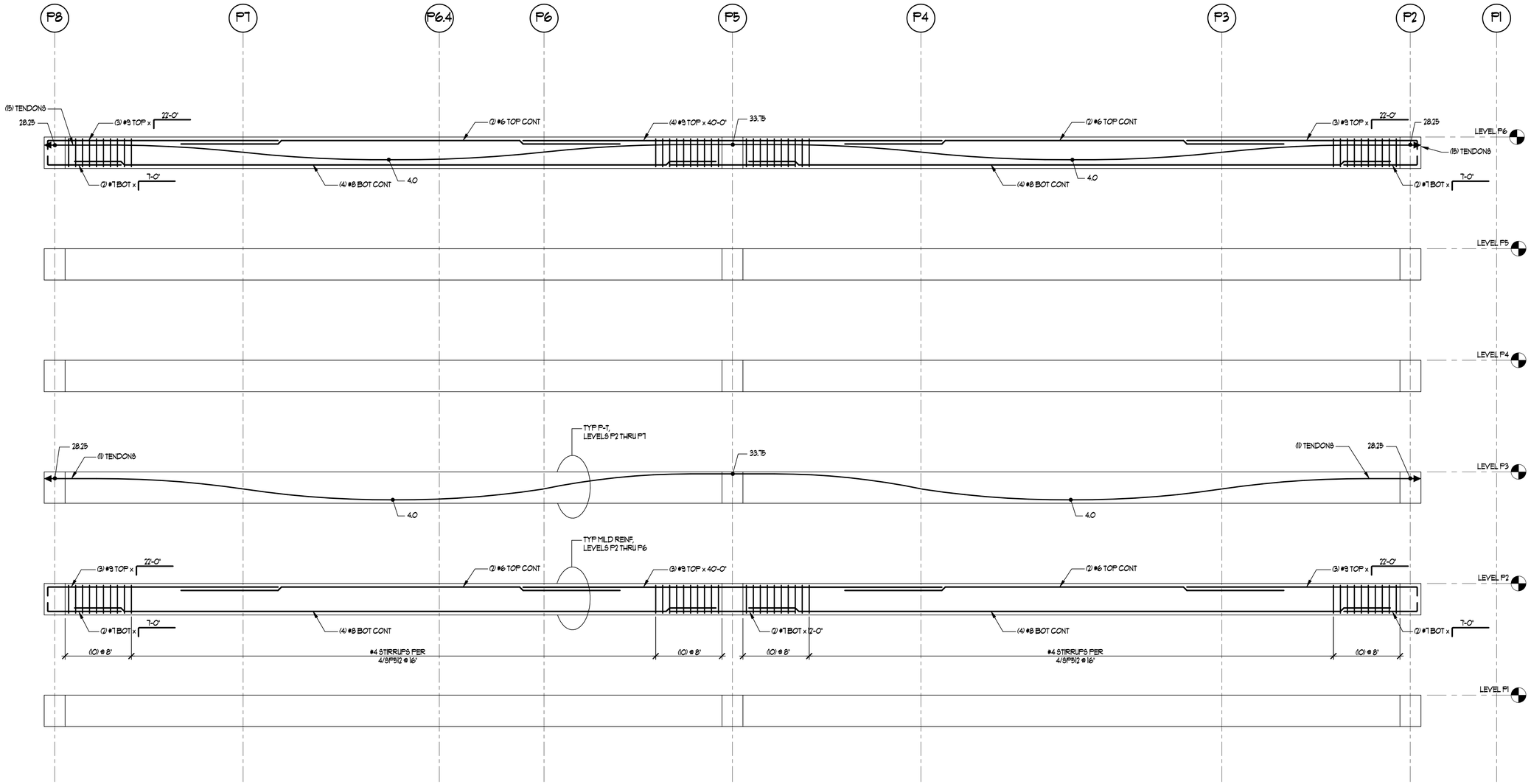

BEAM ELEVATION NOTES:

1. OFFSET BENDS SHOWN AT ENDS OF CONTINUOUS STRAIGHT BARS ARE SHOWN FOR CLARITY ONLY. CONTRACTOR MAY PROVIDE STRAIGHT BARS WITHOUT BENDS.
2. SPLICE REINF. PER SCHEDULE OF DETAIL 2/SP5.0.2, TYP. UNO.
3. SEE SHEETS SP5.2 AND SP5.3 FOR TYPICAL BEAM DETAILS.
4. CORE DRILLING OR ROTO-HAMMERING OF PT SLABS OR BEAMS IS NOT PERMITTED WITHOUT ENGINEER APPROVAL. SEE TYPICAL POST-TENSIONING NOTES.

FRAMING ELEVATION 1
3/16" = 1'-0"

RECORD DRAWINGS

RECORD DRAWING

THESE RECORD DRAWINGS HAVE BEEN PREPARED FROM CONTRACTOR FURNISHED INFORMATION. THERE IS NO GUARANTEE AS TO THE ACCURACY OR COMPLETENESS OF THE INFORMATION CONTAINED HEREIN. RMI WAS NOT RETAINED TO VERIFY THE FIELD CONDITIONS.

COURTNEY WILLOUGHBY
DATE: 12/24/18
REID MIDDLETON INC.

KUMIN
ARCHITECTURE INTERIORS PLANNING
1901 STREET, STE.200 ANCHORAGE, AK 99501
907.272.5363 KUMIN.COM

NEESER CONSTRUCTION, INC.
Reid Middleton
4300 B St., Suite 302 Anchorage, AK 99503
Phone: 907.562.3439 - www.reidmiddleton.com
Corporate License #AECC598
© Copyright Reid Middleton, Inc. 2017

Childrens Dental Clinic Building

4441 Diplomacy Drive, Anchorage AK 99508
Southcentral Foundation

No.	Description	Date

Drawn By: RLC
Checked By: SES
Date: 24 DEC 2018
Phase: RECORD DRAWINGS
Job No: 402016.015
SHEET TITLE: BEAM ELEVATION GRID PL.5

SHEET NO:
SP315

C:\Users\jpagnese\Documents\SCF CDC Garage_Structural RECORD DWGS_2015_jpagnese.rvt
12/27/2018 3:47:05 PM

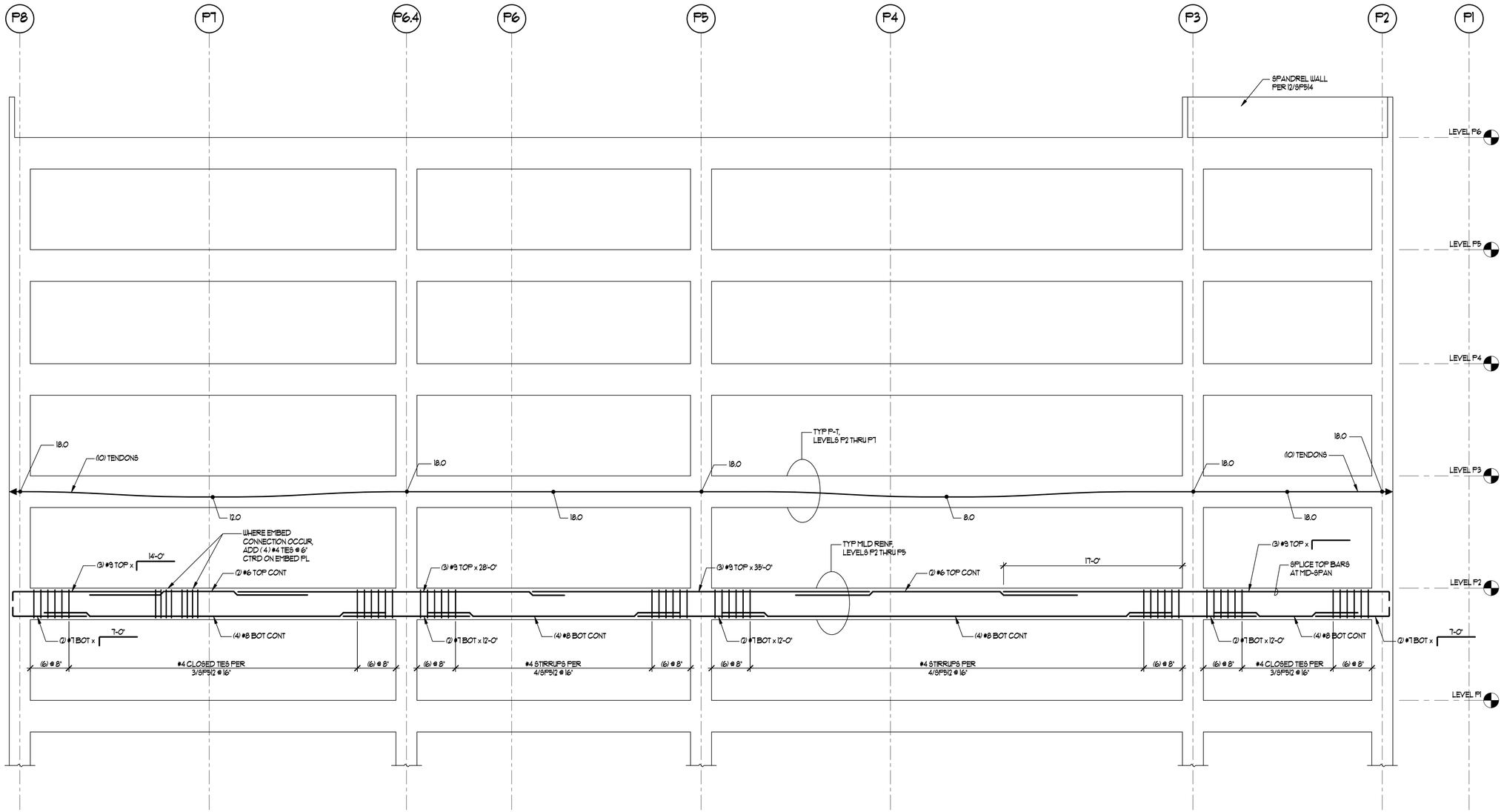

BEAM ELEVATION NOTES:

1. OFFSET BENDS SHOWN AT ENDS OF CONTINUOUS STRAIGHT BARS ARE SHOWN FOR CLARITY ONLY. CONTRACTOR MAY PROVIDE STRAIGHT BARS WITHOUT BENDS.
2. SPLICE REINF. PER SCHEDULE OF DETAIL12/SP502, TYP. UNO.
3. SEE SHEETS SP512 AND SP513 FOR TYPICAL BEAM DETAILS.
4. CORE DRILLING OR ROTO-HAMMERING OF PT SLABS OR BEAMS IS NOT PERMITTED WITHOUT ENGINEER APPROVAL. SEE TYPICAL POST-TENSIONING NOTES.

FRAMING ELEVATION 1
3/16" = 1'-0"

RECORD DRAWINGS

RECORD DRAWING
THESE RECORD DRAWINGS HAVE BEEN PREPARED FROM CONTRACTOR FURNISHED INFORMATION. THERE IS NO GUARANTEE AS TO THE ACCURACY OR COMPLETENESS OF THE INFORMATION CONTAINED HEREIN. RMI WAS NOT RETAINED TO VERIFY THE FIELD CONDITIONS.
COURTNEY WILLOUGHBY
DATE: 12/24/18
REID MIDDLETON INC.

KUMIN
ARCHITECTURE INTERIORS PLANNING
9101 JEWEL LAKE RD, STE 200 ANCHORAGE, AK 99502
907.561.5073 907.561.5074
NEESER CONSTRUCTION, INC.
Reid Middleton
4300 B St., Suite 302 Anchorage, AK 99503
Phone: 907 562-3439 - www.reidmiddleton.com
Corporate License #AECC598
© Copyright Reid Middleton, Inc. 2017

Childrens Dental Clinic Building

4441 Diplomacy Drive, Anchorage AK 99508
Southcentral Foundation

No.	Description	Date

Drawn By: RLC
Checked By: SES
Date: 24 DEC 2018
Phase: RECORD DRAWINGS
Job No: 402016.015
SHEET TITLE: BEAM ELEVATION GRID PM
SHEET NO: SP316

C:\Users\rlaughrey\AppData\Local\Temp\AcPublish_6264\402016.015_SP316.dwg
12/27/2018 3:47:05 PM

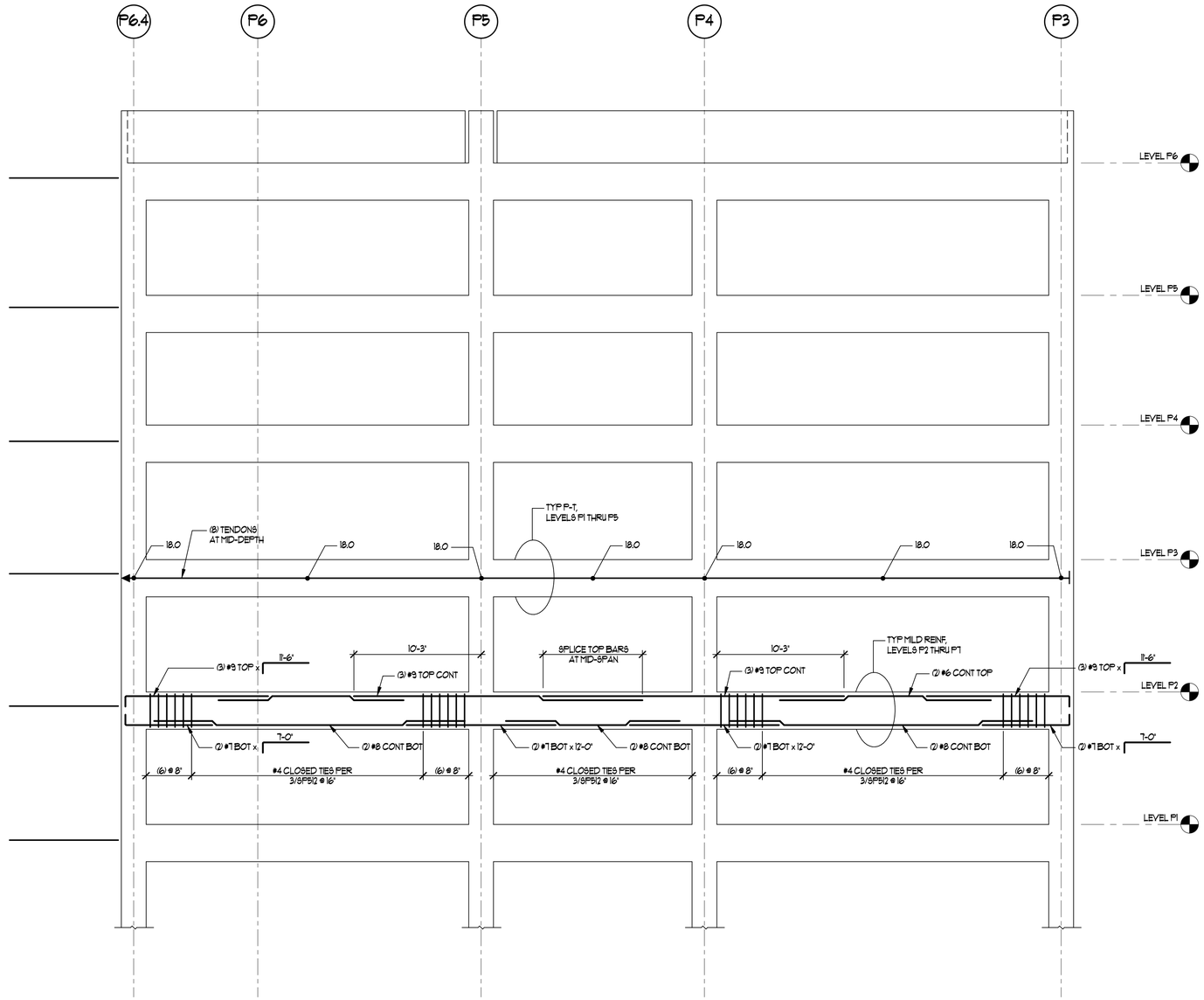

BEAM ELEVATION NOTES:

1. OFFSET BENDS SHOWN AT ENDS OF CONTINUOUS STRAIGHT BARS ARE SHOWN FOR CLARITY ONLY. CONTRACTOR MAY PROVIDE STRAIGHT BARS WITHOUT BENDS.
2. SPLICE REINF. PER SCHEDULE OF DETAIL12/SP502, TYP. UNO.
3. SEE SHEETS SP512 AND SP513 FOR TYPICAL BEAM DETAILS.
4. CORE DRILLING OR ROTO-HAMMERING OF PT SLABS OR BEAMS IS NOT PERMITTED WITHOUT ENGINEER APPROVAL. SEE TYPICAL POST-TENSIONING NOTES.

FRAMING ELEVATION 1

3/16" = 1'-0"

RECORD DRAWINGS

RECORD DRAWING

THESE RECORD DRAWINGS HAVE BEEN PREPARED FROM CONTRACTOR FURNISHED INFORMATION. THERE IS NO GUARANTEE AS TO THE ACCURACY OR COMPLETENESS OF THE INFORMATION CONTAINED HEREIN. RMI WAS NOT RETAINED TO VERIFY THE FIELD CONDITIONS.

COURTNEY WILLOUGHBY
DATE: 12/24/18
REID MIDDLETON INC.

KUMIN
ARCHITECTURE INTERIORS PLANNING
9101 JEWEL LAKE RD, STE 200 ANCHORAGE, AK 99502
907.561.5073 907.562.3439

NEESER CONSTRUCTION, INC.
Reid Middleton
4300 B St., Suite 302 Anchorage, AK 99503
Phone: 907.562.3439 - www.reidmiddleton.com
Corporate License #AECC598
© Copyright Reid Middleton, Inc. 2017

Childrens Dental Clinic Building

4441 Diplomacy Drive, Anchorage AK 99508
Southcentral Foundation

No.	Description	Date

Drawn By: RLC
Checked By: SES
Date: 24 DEC 2018
Phase: RECORD DRAWINGS
Job No: 402016.015
SHEET TITLE: BEAM ELEVATION GRID PN
SHEET NO: SP317

C:\Users\plaginski\Documents\SCF CDC Garage_Structural RECORD DWGS_2015_plaginski.rvt
12/21/2018 3:47:06 PM

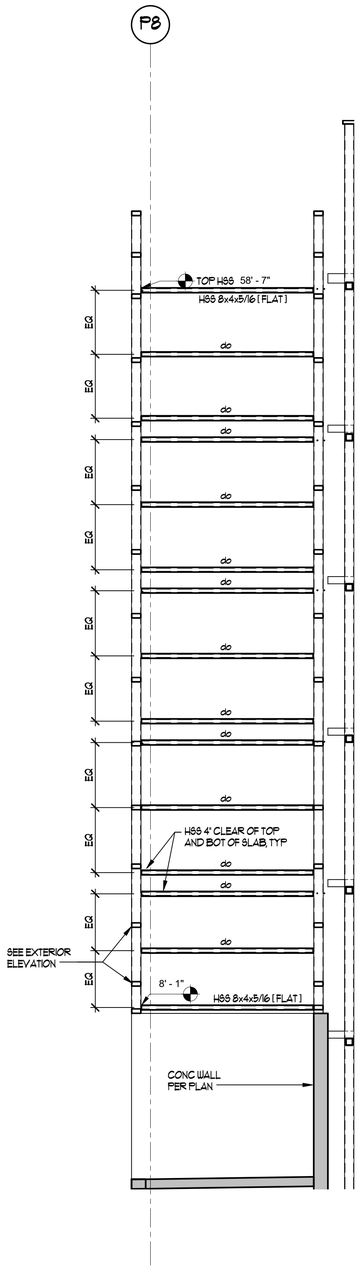

NORTH CHUTE - GARAGE SIDE ELEVATION 1
NTS

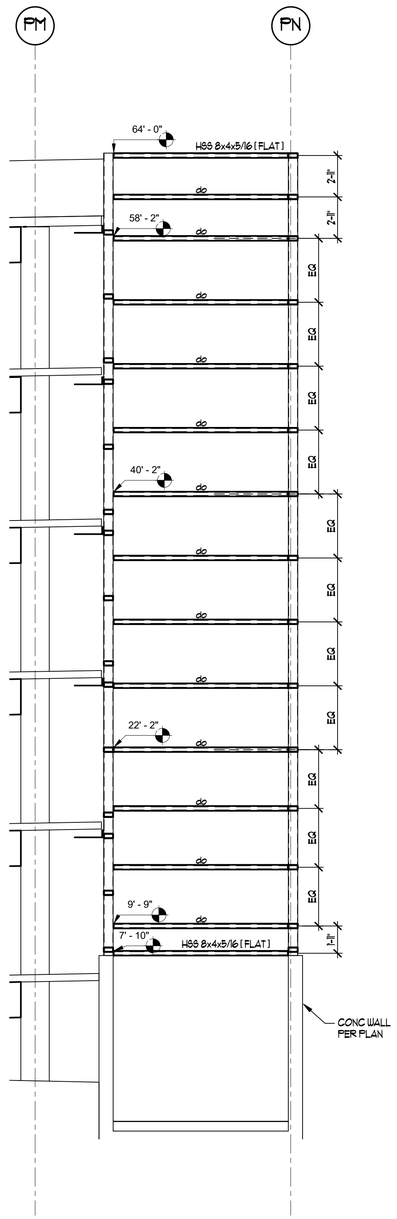

NORTH CHUTE - EXTERIOR ELEVATION 2
NTS

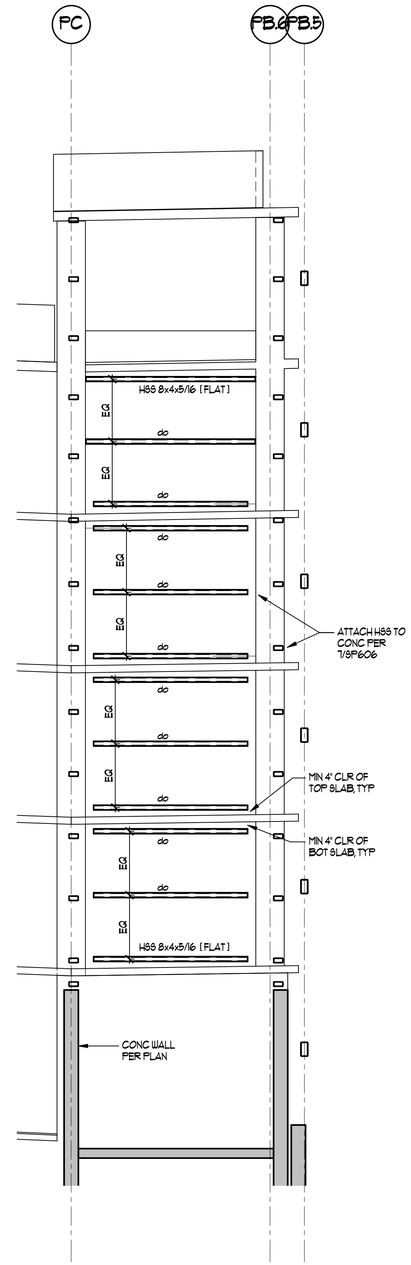

SOUTH CHUTE - GARAGE SIDE ELEVATION @ GRID P2 3
NTS

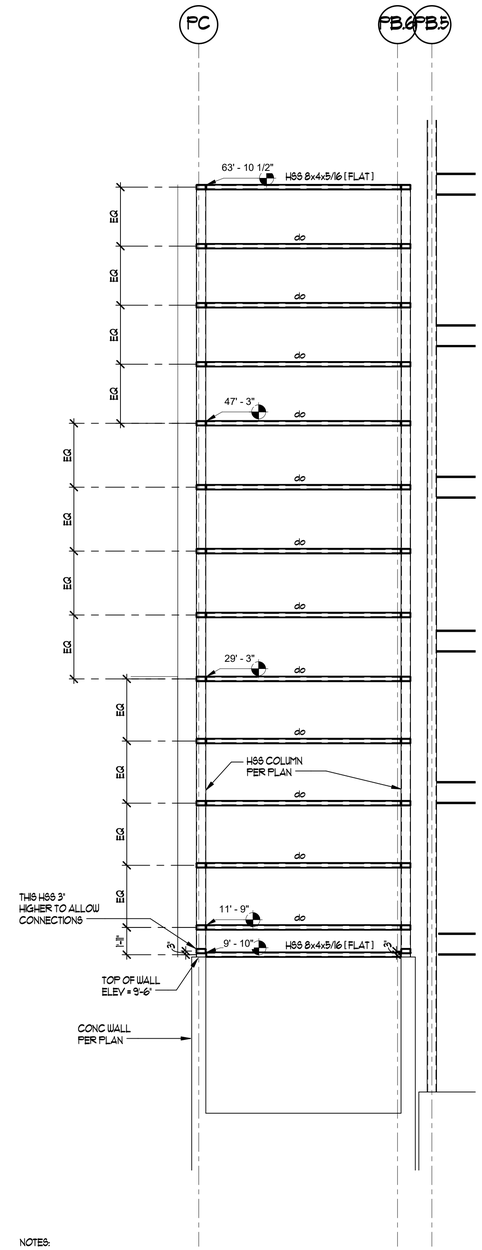

NOTES:

SEE 4/SP601 FOR TYPICAL HSS-TO-HSS CONNECTIONS UNO.

SEE 3/SP606 FOR TYPICAL HSS-TO-CONC CONNECTIONS UNO.

EXTERIOR ELEVATIONS 2/SP318 AND 4/SP318 APPLY TO (3) SIDES OF THE CHUTE.

SOUTH CHUTE - EXTERIOR ELEVATION @ GRID P1 4
NTS

RECORD DRAWINGS

RECORD DRAWING

THESE RECORD DRAWINGS HAVE BEEN PREPARED FROM CONTRACTOR FURNISHED INFORMATION. THERE IS NO GUARANTEE AS TO THE ACCURACY OR COMPLETENESS OF THE INFORMATION CONTAINED HEREIN. RMI WAS NOT RETAINED TO VERIFY THE FIELD CONDITIONS.

COURTNEY WILLOUGHBY
DATE: 12/24/18
REID MIDDLETON INC.

KUMIN
ARCHITECTURE INTERIORS PLANNING
1818 STATES ST, SUITE 200 ANCHORAGE, AK 99501
907.272.5363 KUMINAK.COM

NEESER CONSTRUCTION, INC.
Reid Middleton
4300 B St., Suite 302 Anchorage, AK 99503
Phone: 907.562.3439 - www.reidmiddleton.com
Corporate License #AECC598
© Copyright Reid Middleton, Inc. 2017

Childrens Dental Clinic Building

4441 Diplomacy Drive, Anchorage AK 99508
Southcentral Foundation

No.	Description	Date

Drawn By: RLC
Checked By: SES
Date: 24 DEC 2018
Phase: RECORD DRAWINGS
Job No: 402016.015
SHEET TITLE: SNOW CHUTE ELEVATIONS
SHEET NO: SP318

C:\Users\glagnaw\Documents\SCF CDC Garage_Structural RECORD DWGS_2015_glagnaw.rvt
12/21/2018 3:47:07 PM

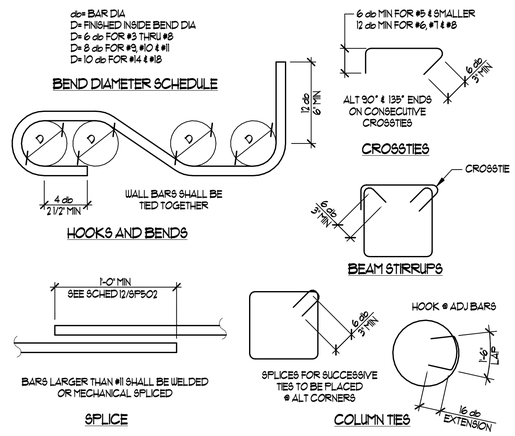

TYPICAL REINFORCING BAR BEND AND LAP DETAILS 2

NTS

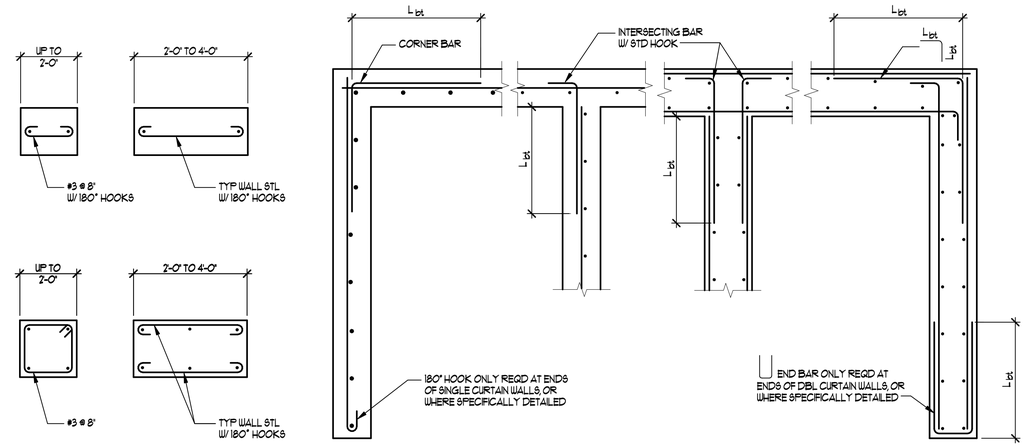

TYPICAL CONCRETE WALL PLAN DETAILS 4

NTS

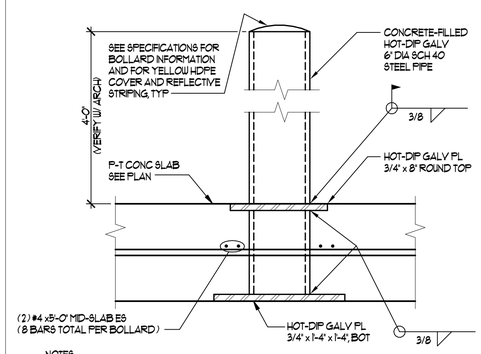

NOTES:

1. SEE ARCHITECT FOR GALVANIZING OR OTHER FINISHES AS REQUIRED.
2. EMBEDDED PORTION OF ASSEMBLY MUST BE INSTALLED PRIOR TO CASTING CONCRETE SLAB.

TYPICAL BOLLARD DETAIL AT ELEVATED DECK 6

NTS

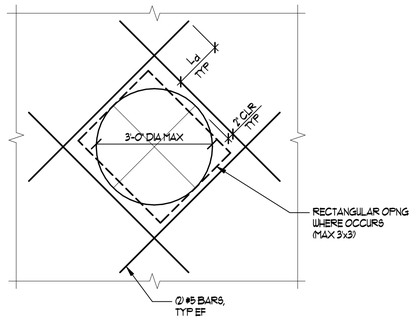

NOTES:

1. HORIZONTAL AND VERTICAL WALL REINFORCING NOT SHOWN FOR CLARITY.
2. TERMINATE INTERRUPTED HORIZONTAL AND VERTICAL REINFORCEMENT WITH A STANDARD HOOK.
3. REFER TO CIVIL AND MECHANICAL DRAWINGS FOR LOCATIONS OF PIPE PENETRATIONS.

REINFORCING AT PIPE PENETRATION IN WALL 7

NTS

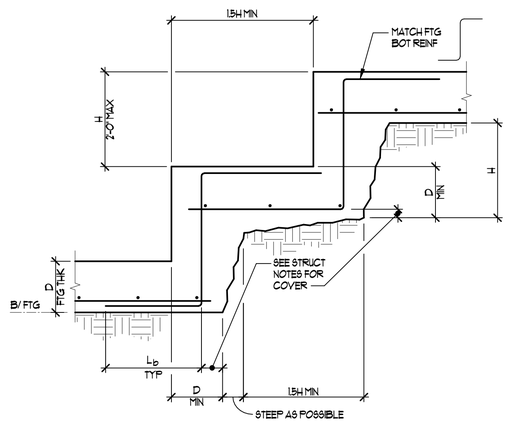

TYPICAL STEPPED FOOTING DETAIL 8

NTS

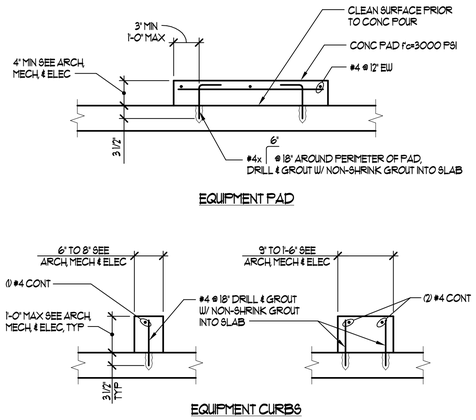

TYPICAL CURB AND PAD ON CONCRETE SLAB DETAILS 9

NTS

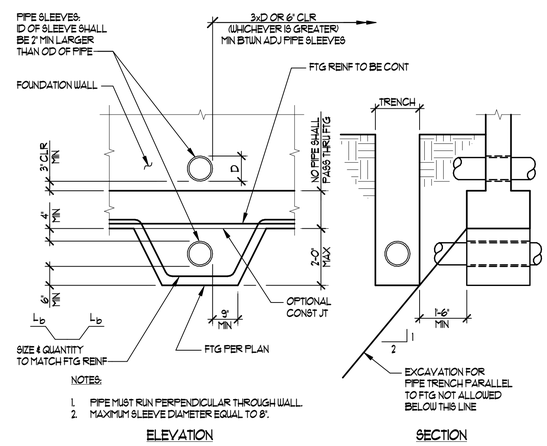

NOTES:

1. PIPE MUST RUN PERPENDICULAR THROUGH WALL.
2. MAXIMUM SLEEVE DIAMETER EQUAL TO 8".

ELEVATION

SECTION

TYPICAL PIPE ENCASEMENT AT FOOTING 10

NTS

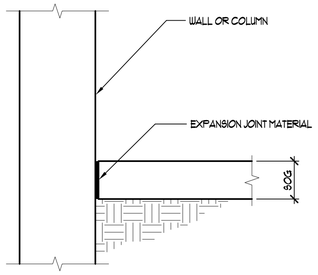

TYPICAL ISOLATION JOINT 11

NTS

STATE OF ALASKA 49TH Keith F. Mobley CE - 5066 30 Aug 2016 REGISTERED PROFESSIONAL ENGINEER

* NORTHERN GEOTECHNICAL ENGINEERING, INC HAS DESIGNED AND IS RESPONSIBLE FOR THE FOOTING SIZES FOR BEARING ON NATIVE SOILS AT THE BASEMENT LEVEL

NORTHERN GEOTECHNICAL ENGINEERING TERRA FIRMA TESTING

FOOTING SCHEDULE						
MARK	WIDTH	LENGTH	DEPTH	TOP REINFORCING	BOTTOM REINFORCING	REMARKS
FA	18'-0"	PER PLAN	6'-0"	(24) #10 LONGIT #6 @ 9" TRANS	(56) #10 LONGIT #3 @ 9" TRANS	PLACE BOTTOM BARS IN BUNDLES OF (2) - SEE SHEAR WALL ELEVATIONS FOR ADDITIONAL REINF PER DETAIL 4/SP502
FB	12'-0"	PER PLAN	4'-0"	(16) #6* LONGIT #6 @ 9" TRANS	(44) #3 LONGIT #3 @ 12" TRANS	
FC	7'-4"	PER PLAN	3'-0"	(12) #3 LONGIT #6 @ 12" TRANS	(12) #3 LONGIT #7 @ 9" TRANS	SEE OFFICE BLDG DRAWINGS FOR ADDITIONAL INFO
F4	4'-0"	4'-0"	2'-0"	-	(7) #5 EW	-
F5	5'-0"	5'-0"	2'-0"	-	(9) #5 EW	-
F6	6'-0"	6'-0"	2'-0"	-	(9) #6 EW	-
F6A	6'-0"	8'-4"	2'-0"	(7) #5 LONGIT (10) #5 TRANS	(7) #5 LONGIT (9) #5 TRANS	SPLICE RETAINING WALL FOOTING REINFORCING INTO EACH SIDE OF FOOTING
F6B	6'-0"	6'-9"	2'-0"	(7) #5 LONGIT (10) #5 TRANS	(7) #5 LONGIT (7) #5 TRANS	SEE F6A REMARKS
F7	7'-0"	7'-0"	2'-3"	-	(11) #6 EW	-
F10.5	10'-6"	10'-6"	2'-9"	-	(16) #7 EW	SEE PLAN FOR FTG DIMS AT SIM
F12	12'-0"	12'-0"	3'-0"	-	(16) #8 EW	-
F15.5	15'-6"	12'-0"	3'-3"	-	(16) #8 LONGIT (20) #8 TRANS	-

FOOTING SCHEDULE 12

NTS

RECORD DRAWINGS

RECORD DRAWING

THESE RECORD DRAWINGS HAVE BEEN PREPARED FROM CONTRACTOR FURNISHED INFORMATION. THERE IS NO GUARANTEE AS TO THE ACCURACY OR COMPLETENESS OF THE INFORMATION CONTAINED HEREIN. RMI WAS NOT RETAINED TO VERIFY THE FIELD CONDITIONS.

COURTNEY WILLOUGHBY
DATE: 12/24/18
REID MIDDLETON INC.

KUMIN
ARCHITECTURE INTERIORS PLANNING
1901 STREET, STE 200 ANCHORAGE, AK 99501
907.272.5363 KUMIN.COM

NEESER CONSTRUCTION, INC.
Reid Middleton
4300 B St., Suite 302 Anchorage, AK 99503
Phone: 907.562.3439 - www.reidmiddleton.com
Corporate License #AECC598

© Copyright Reid Middleton, Inc. 2017

Childrens Dental Clinic Building

4441 Diplomacy Drive, Anchorage AK 99508

Southcentral Foundation

No.	Description	Date

Drawn By: RLC
Checked By: SES
Date: 24 DEC 2018
Phase: RECORD DRAWINGS
Job No: 402016.015
SHEET TITLE: TYPICAL CONCRETE DETAILS

SHEET NO: SP501

C:\Users\glaginski\Documents\SCF CDC Garage_Structural RECORD DWGS_2018_glaginski.rvt

12/21/2018 3:47:10 PM

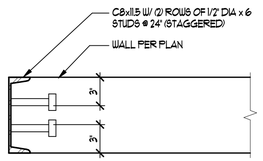

EMBED CHANNEL FOR GATE ATTACHMENT 1

1 1/2" = 1'-0"

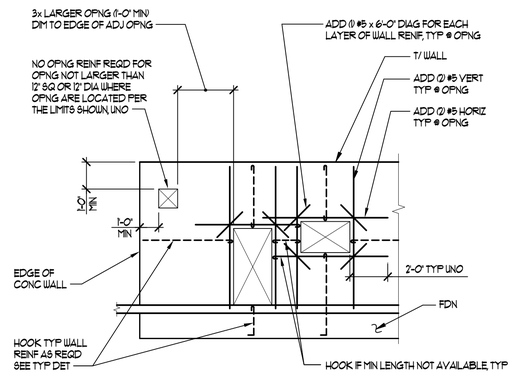

NOTE:

1. TYPICAL WALL REINFORCING NOT SHOWN FOR CLARITY, EXCEPT AS NOTED.

TYPICAL CONCRETE WALL REINFORCING 2

(FOR BASEMENT WALLS AND SITE WALLS ONLY) NTS

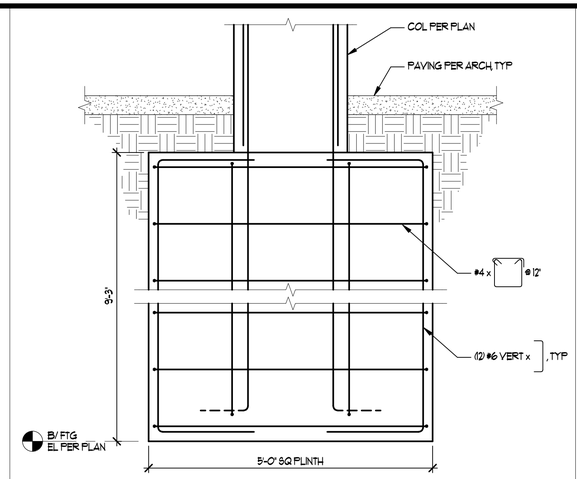

SECTION AT SQUARE PLINTH 3

3/4" = 1'-0"

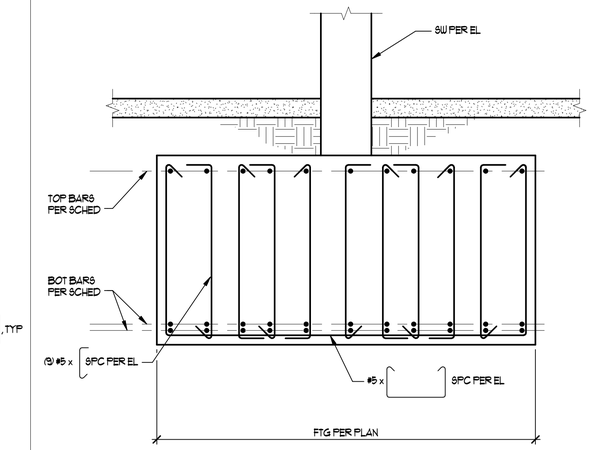

SHEAR WALL FOOTING TIES 4

1/2" = 1'-0"

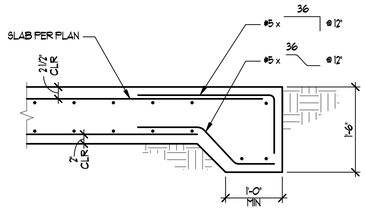

TRASH COMPACTOR SLAB EDGE 5

3/4" = 1'-0"

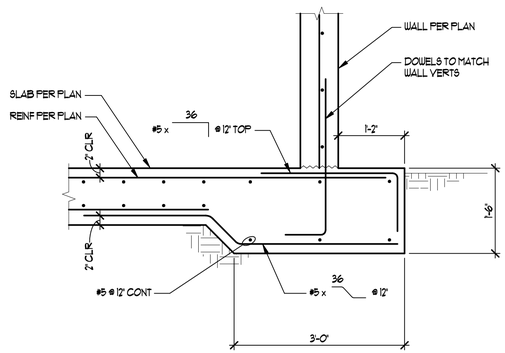

TRASH COMPACTOR FOUNDATION 6

3/4" = 1'-0"

1 MINIMUM STRAIGHT DEVELOPMENT LENGTH (L_d) +

f'c = 4000 to 5000 PSI

BAR SIZE	TOP BARS	OTHER BARS
#3	19"	15"
#4	25"	19"
#5	31"	24"
#6	37"	29"
#7	54"	42"
#8	62"	48"
#9	70"	54"
#10	79"	61"
#11	87"	67"

+ 'TOP BARS' ARE HORIZONTAL BARS WITH MORE THAN 12" DEPTH OF CONCRETE CAST BELOW THEM.

IF CLEAR CONCRETE COVER IS LESS THAN 1x THE DIAMETER OF THE BAR OR THE CENTER-TO-CENTER SPACING IS LESS THAN (3) BAR DIAMETERS, THEN VALUES SHALL BE INCREASED BY 50%.

1 MINIMUM LAP SPLICE LENGTHS (L_p) + (CLASS B)

f'c = 4000 to 5000 PSI

BAR SIZE	TOP BARS	OTHER BARS
#3	25"	19"
#4	33"	25"
#5	40"	31"
#6	48"	37"
#7	71"	54"
#8	81"	62"
#9	91"	70"
#10	103"	79"
#11	114"	87"

+ 'TOP BARS' ARE HORIZONTAL BARS WITH MORE THAN 12" DEPTH OF CONCRETE CAST BELOW THEM.

IF CLEAR CONCRETE COVER IS LESS THAN 1x THE DIAMETER OF THE BAR OR THE CENTER-TO-CENTER SPACING IS LESS THAN (3) BAR DIAMETERS, THEN VALUES SHALL BE INCREASED BY 50%.

II MINIMUM EMBEDMENT LENGTHS (L_{dh}) FOR STANDARD END HOOKS

A. FOR GENERAL USES:

BAR SIZE	f'c = 4000 to 5000 PSI
#3	6"
#4	7"
#5	9"
#6	10"
#7	12"
#8	14"
#9	15"
#10	17"
#11	19"

1. SIDE COVER MUST BE EQUAL TO OR GREATER THAN 2 1/2".
2. END COVER FOR 90 DEGREE HOOKS MUST BE EQUAL TO OR GREATER THAN 2".

REINFORCING BARS DEVELOPMENT AND SPLICE LENGTH TABLES 12

NTS

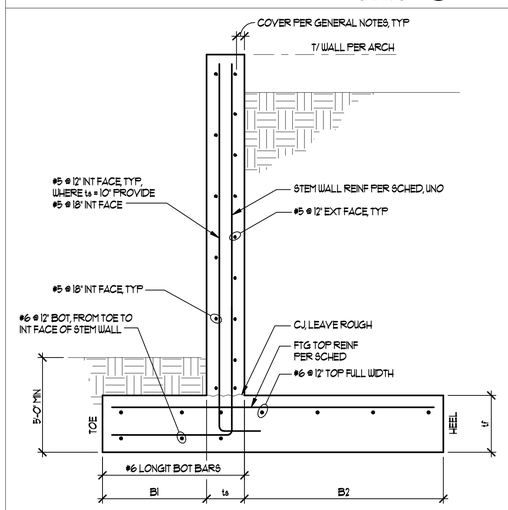

MAXIMUM HORIZ DESIGN PRESSURE:	42 PCF
MINIMUM ALLOWABLE BEARING:	VARIES PER GENERAL NOTES
COEFFICIENT OF FRICTION:	0.40 (INCLUDING FACTOR OF SAFETY)
PASSIVE RESISTANCE:	380 PCF
UNIT WEIGHT OF SOIL:	130 PCF
f'_c:	4500 PSI
F_y:	60,000 PSI

SCHEDULE

WALL TYPE	t_s	MINIMUM B1	MINIMUM B2	t_f	STEM REINF VERT	FTG REINF TOP
T1	10"	2'-7"	2'-7"	1'-6"	#8 @ 15"	#6 @ 15"
T2	13"	3'-1"	3'-1"	1'-6"	#8 @ 12"	#6 @ 12"
T3	13"	3'-8 1/2"	3'-8 1/2"	1'-6"	#8 @ 8"	#6 @ 12"
T4	13"	4'-2 1/2"	4'-2 1/2"	1'-6"	#8 @ 5"	#6 @ 10"
T5	16"	4'-5 1/2"	4'-5 1/2"	1'-7"	#8 @ 5"	#6 @ 10"
T6	16"	4'-10"	4'-10"	1'-9"	#8 @ 4"	#6 @ 8"
T7	12"	MAT FDN 8" MIN EXT BEYOND FACE OF WALL		1'-0" MINIMUM	N/A	#5 @ 12" EW T&B

TYPICAL CONCRETE CANTILEVER WALL 11

NTS

RECORD DRAWING

THESE RECORD DRAWINGS HAVE BEEN PREPARED FROM CONTRACTOR FURNISHED INFORMATION. THERE IS NO GUARANTEE AS TO THE ACCURACY OR COMPLETENESS OF THE INFORMATION CONTAINED HEREIN. RMI WAS NOT RETAINED TO VERIFY THE FIELD CONDITIONS.

COURTNEY WILLOUGHBY
DATE: 12/24/18
REID MIDDLETON INC.

KUMIN
ARCHITECTURE INTERIORS PLANNING
9101 JEWEL LAKE RD, STE 200 ANCHORAGE, AK 99502
(907) 272-5363 (907) 349-3567

NEESER CONSTRUCTION, INC.
Reid Middleton
4300 B St., Suite 302 Anchorage, AK 99503
Phone: 907.562.3439 - www.reidmiddleton.com
Corporate License #AECC598

© Copyright Reid Middleton, Inc. 2017

Childrens Dental Clinic Building

4441 Diplomacy Drive, Anchorage AK 99508

Southcentral Foundation

No.	Description	Date

Drawn By: RLC
Checked By: SES
Date: 24 DEC 2018
Phase: RECORD DRAWINGS
Job No: 402016.015
SHEET TITLE: TYPICAL CONCRETE DETAILS
SHEET NO: SP502

C:\Users\glagnas\Documents\SCF CDC Garage_Structural RECORD DWGS_2019_glagnas.rvt
12/21/2018 3:47:13 PM

RECORD DRAWINGS

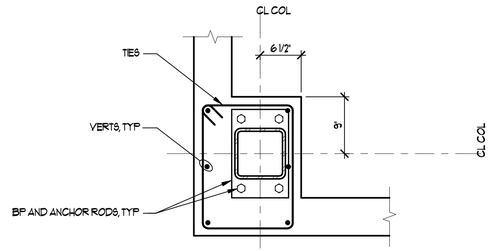

6A SECTION

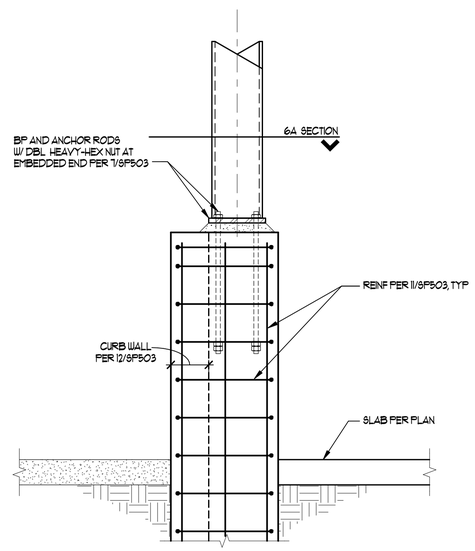

WALL PIER AT NORTHEAST STAIR 6
1" = 1'-0"

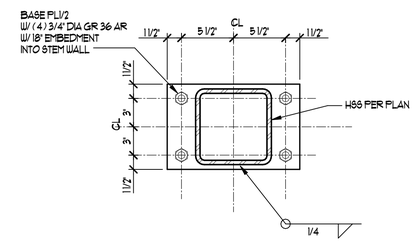

HSS BASE PLATE 7
11/2" = 1'-0"

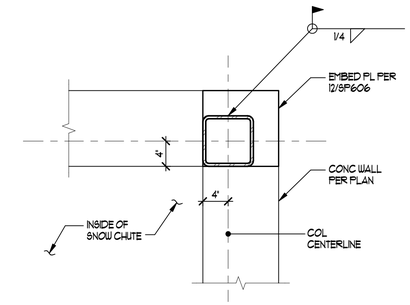

BASE PLATE TO CONCRETE WALL CONNECTION 4
1" = 1'-0"

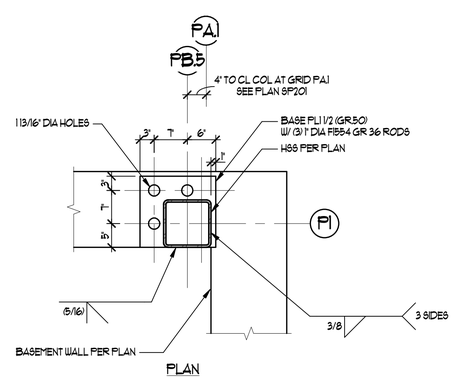

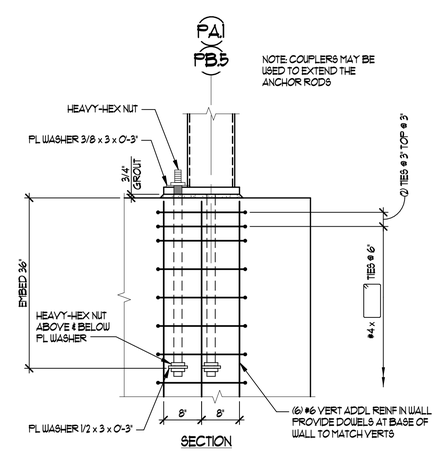

WALL MOUNTED COLUMN REINFORCING 11
3/4" = 1'-0"

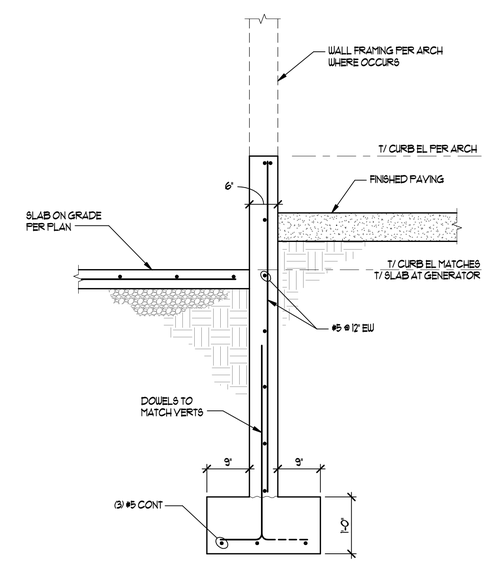

TYPICAL INTERIOR CURB WALL 12
3/4" = 1'-0"

RECORD DRAWINGS

RECORD DRAWING

THESE RECORD DRAWINGS HAVE BEEN PREPARED FROM CONTRACTOR FURNISHED INFORMATION. THERE IS NO GUARANTEE AS TO THE ACCURACY OR COMPLETENESS OF THE INFORMATION CONTAINED HEREIN. RMI WAS NOT RETAINED TO VERIFY THE FIELD CONDITIONS.

COURTNEY WILLOUGHBY
DATE: 12/24/18
REID MIDDLETON INC.

KUMIN
ARCHITECTURE INTERIORS PLANNING
1901 STEELE ST. #200 ANCHORAGE, AK 99503
907.272.5561 KUMIN.COM

NEESER CONSTRUCTION, INC.

Reid Middleton
4300 B St., Suite 302 Anchorage, AK 99503
Phone: 907.562.3439 - www.reidmiddleton.com
Corporate License #AECC598

© Copyright Reid Middleton, Inc. 2017

Childrens Dental Clinic Building

4441 Diplomacy Drive, Anchorage AK 99508

Southcentral Foundation

No.	Description	Date

Drawn By: RLC
Checked By: SES
Date: 24 DEC 2018
Phase: RECORD DRAWINGS
Job No: 402016.015
SHEET TITLE: CONCRETE SECTIONS AND DETAILS

SHEET NO:

SP503

C:\Users\jeagleson\Documents\SCF CDC Garage_Structural RECORD DWGS_2015_jeagleson.rvt

12/21/2018 3:47:14 PM

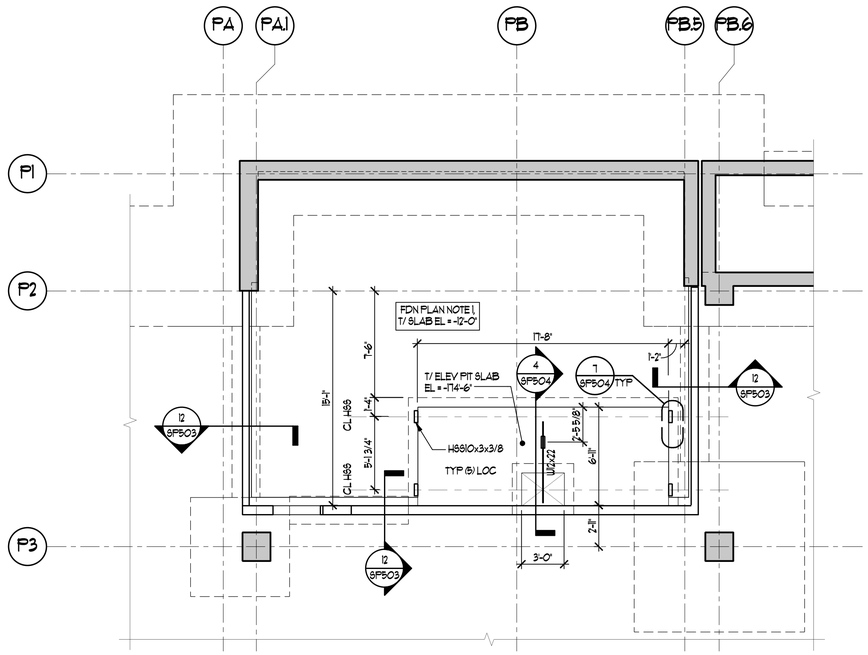

ELEVATOR PARTIAL PLAN 6
3/16" = 1'-0"

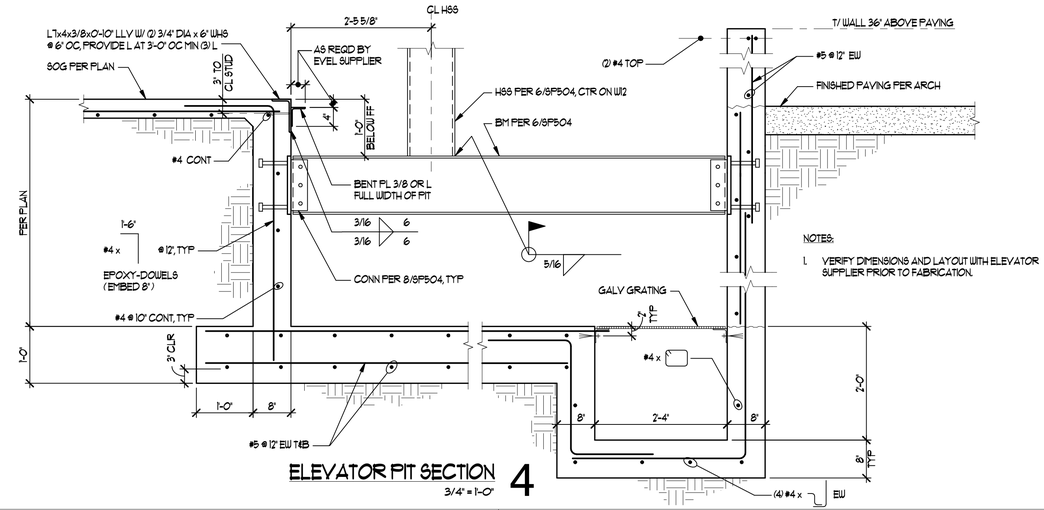

ELEVATOR PIT SECTION 4
3/4" = 1'-0"

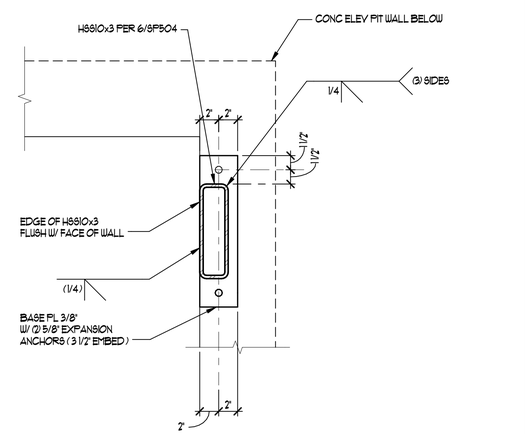

HSS CONNECTION AT ELEVATOR PIT WALL 7
1 1/2" = 1'-0"

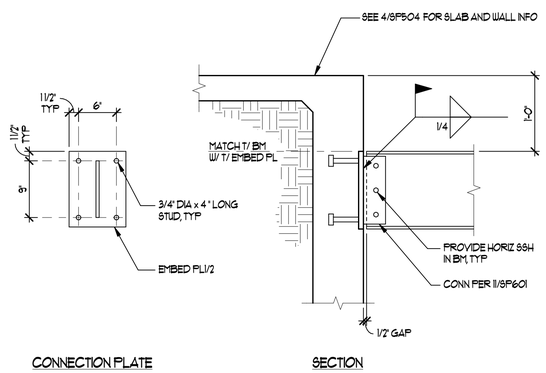

BEAM CONNECTION AT ELEVATOR PIT WALL 8
1" = 1'-0"

RECORD DRAWING

THESE RECORD DRAWINGS HAVE BEEN PREPARED FROM CONTRACTOR FURNISHED INFORMATION. THERE IS NO GUARANTEE AS TO THE ACCURACY OR COMPLETENESS OF THE INFORMATION CONTAINED HEREIN. RMI WAS NOT RETAINED TO VERIFY THE FIELD CONDITIONS.

COURTNEY WILLOUGHBY
DATE: 12/24/18
REID MIDDLETON INC.

KUMIN
ARCHITECTURE INTERIORS PLANNING
1900 E STREET, STE 200 ANCHORAGE, AK 99501
907.272.5363 907.272.5365

NEESER CONSTRUCTION, INC.
Reid Middleton
4300 B St., Suite 302 Anchorage, AK 99503
Phone: 907 562-3439 - www.reidmiddleton.com
Corporate License #AECC598

© Copyright Reid Middleton, Inc. 2017

Childrens Dental Clinic Building

4441 Diplomacy Drive, Anchorage AK 99508
Southcentral Foundation

No.	Description	Date

Drawn By: RLC
Checked By: SES
Date: 24 DEC 2018
Phase: RECORD DRAWINGS
Job No: 402016.015
SHEET TITLE: ELEVATOR PIT DETAILS
SHEET NO: SP504

C:\Users\jsagnes\Documents\SCF CDC Garage_Structural RECORD DWGS_2019_jsagnes.rvt
12/21/2018 3:47:16 PM

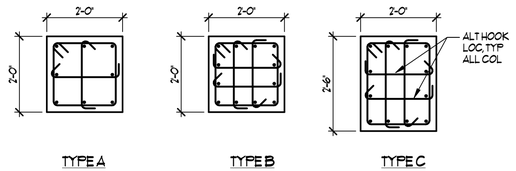

NOTES:

1. A TYPICAL CROSSTIE SHALL HAVE A 135° HOOK AT ONE END AND A 90° HOOK AT THE OTHER END.
2. CROSSTIES WITH 90° HOOKS SHALL HAVE THE CONSECUTIVE CROSSTIES ALTERNATE END FOR END ALONG THE LONGITUDINAL REINFORCEMENT.
3. WHERE 12/SP506 IS USED PROVIDE ZONE A TIE SPACING.

COLUMN TIES 2
NTS

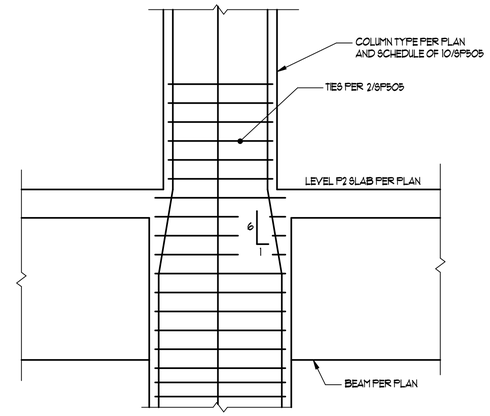

P8 / P5 COLUMN TRANSITION DETAIL 3
3/4" = 1'-0"

COLUMN VERT MINIMUM LAP SPLICE LENGTH (L_b)

BAR SIZE	f'c = 4,000 TO 5,000 PSI
#6	23"
#7	33"
#8	37"
#9	46"
#10	57"

MINIMUM COLUMN LAP SPLICE LENGTH 4
NTS

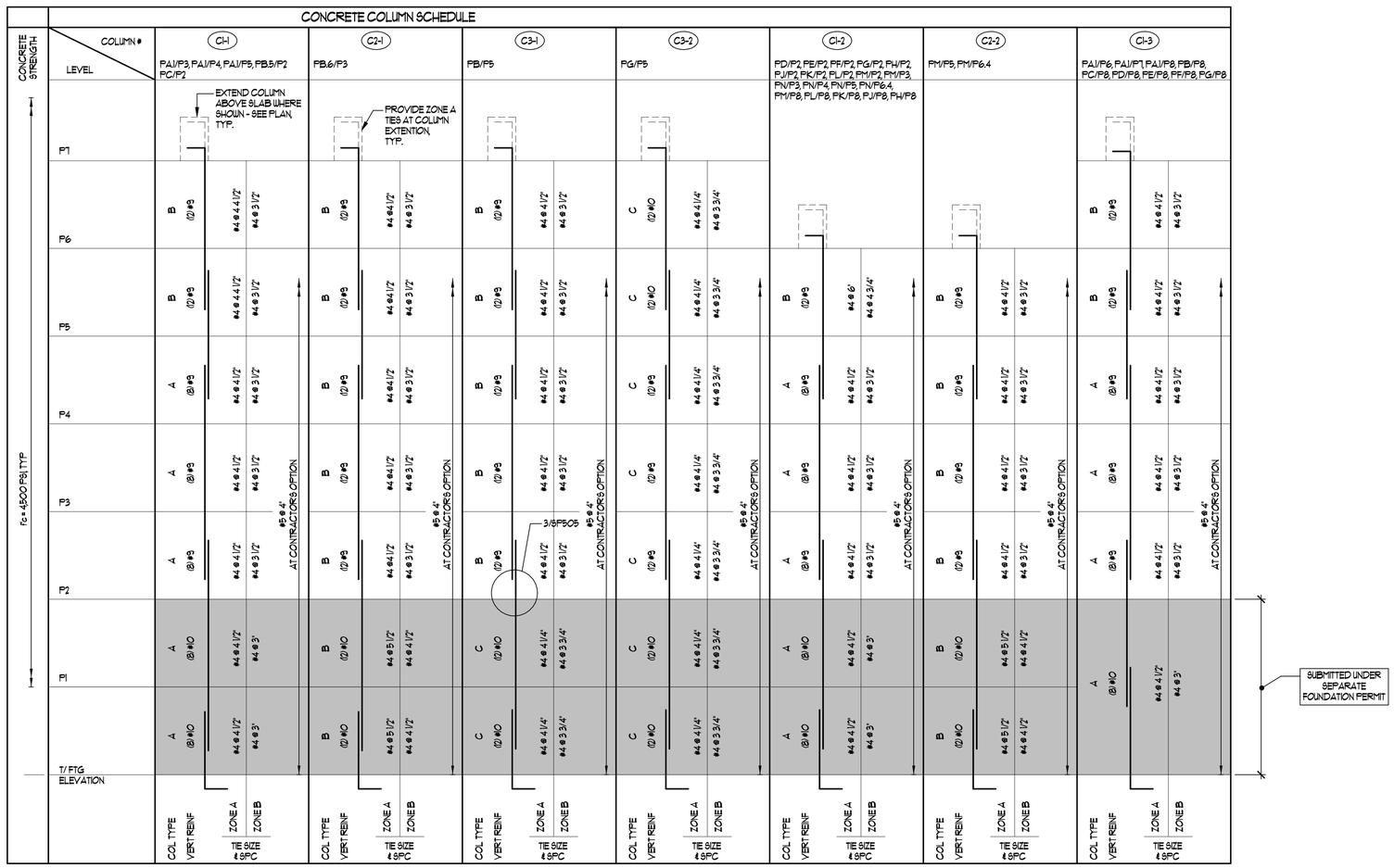

CONCRETE COLUMN SCHEDULE 10
NTS

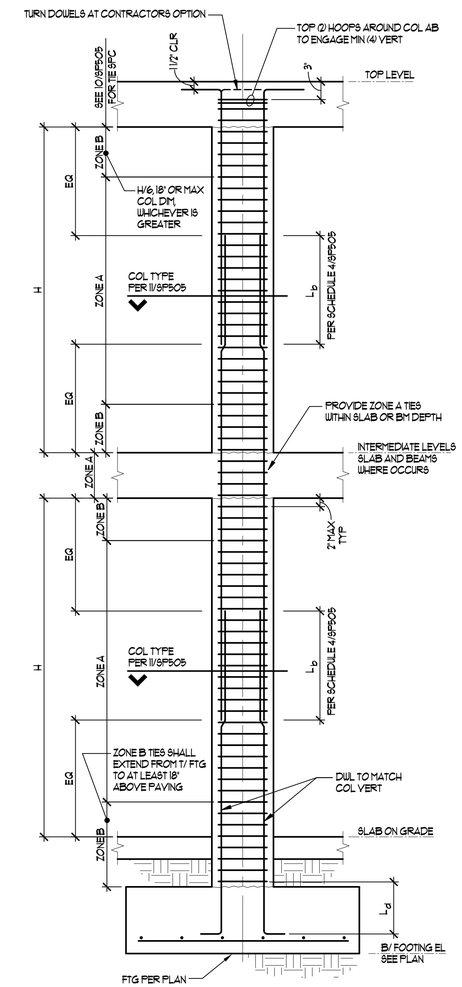

TYPICAL INTERIOR CONCRETE COLUMN 12
NTS

RECORD DRAWINGS

RECORD DRAWING
THESE RECORD DRAWINGS HAVE BEEN PREPARED FROM CONTRACTOR FURNISHED INFORMATION. THERE IS NO GUARANTEE AS TO THE ACCURACY OR COMPLETENESS OF THE INFORMATION CONTAINED HEREIN. RMI WAS NOT RETAINED TO VERIFY THE FIELD CONDITIONS.
COURTNEY WILLOUGHBY
DATE: 12/24/18
REID MIDDLETON INC.

KUMIN
ARCHITECTURE INTERIORS PLANNING
9101 JEWEL LAKE RD, STE 200 ANCHORAGE, AK 99502
907.562.2992 KUMIN.COM

NEESER CONSTRUCTION, INC.
Reid Middleton
4300 B St., Suite 302 Anchorage, AK 99503
Phone: 907.562.3439 - www.reidmiddleton.com
Corporate License #AECC598

© Copyright Reid Middleton, Inc. 2017

Childrens Dental Clinic Building
4441 Diplomacy Drive, Anchorage AK 99508
Southcentral Foundation

No.	Description	Date

Drawn By: RLC
Checked By: SES
Date: 24 DEC 2018
Phase: RECORD DRAWINGS
Job No: 402016.015
SHEET TITLE: COLUMN TYPES AND SCHEDULE
SHEET NO: SP505

C:\Users\plaghsek\Documents\SCF CDC Garage_Structural RECORD DWGS_2019_plaghsek.rvt
12/21/2018 3:47:19 PM

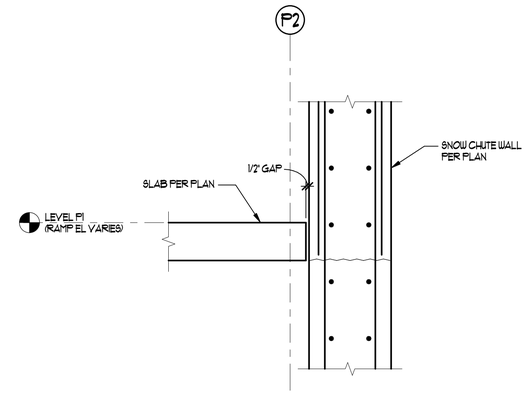

WALL SECTION BETWEEN GRIDS PB.5 AND PC 3
1" = 1'-0"

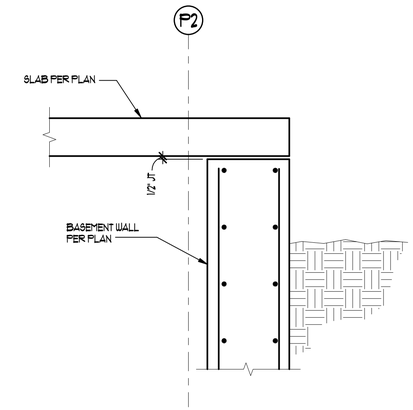

WALL SECTION BETWEEN GRIDS PC AND PE 4
1" = 1'-0"

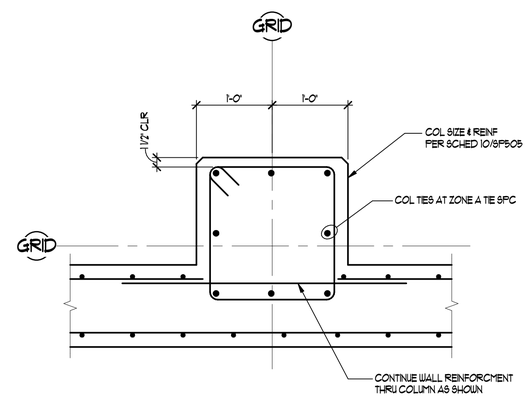

SECTION AT COLUMN 12
1" = 1'-0"

RECORD DRAWINGS

RECORD DRAWING

THESE RECORD DRAWINGS HAVE BEEN PREPARED FROM CONTRACTOR FURNISHED INFORMATION. THERE IS NO GUARANTEE AS TO THE ACCURACY OR COMPLETENESS OF THE INFORMATION CONTAINED HEREIN. RMI WAS NOT RETAINED TO VERIFY THE FIELD CONDITIONS.

COURTNEY WILLOUGHBY
DATE: 12/24/18
REID MIDDLETON INC.

KUMIN
ARCHITECTURE INTERIORS PLANNING
1900 E. 5th AVE., STE.200 ANCHORAGE, AK 99501
907.272.5363 KUMIN.COM

NEESER CONSTRUCTION, INC.
Reid Middleton
4300 B St., Suite 302 Anchorage, AK 99503
Phone: 907.562.3439 - www.reidmiddleton.com
Corporate License #AECC598
© Copyright Reid Middleton, Inc. 2017

Childrens Dental Clinic Building

4441 Diplomacy Drive, Anchorage AK 99508
Southcentral Foundation

No.	Description	Date

Drawn By: RLC
Checked By: SES
Date: 24 DEC 2018
Phase: RECORD DRAWINGS
Job No: 402016.015
SHEET TITLE: CONCRETE DETAILS

SHEET NO:
SP506

C:\Users\jpagnan\Documents\SCF CDC Garage_Structural\ RECORD DWGS_2019_jpagnan.rvt
12/21/2018 3:47:20 PM

SHEAR WALL VERT
MINIMUM LAP SPLICE LENGTH (Lb)

BAR SIZE	f'c = 4,000 TO 5,000 PSI
#6	33"
#7	42"
#8	53"
#9	65"
#10	79"
#11	87"

MINIMUM SHEAR WALL LAP SPLICE LENGTH 4
NTS

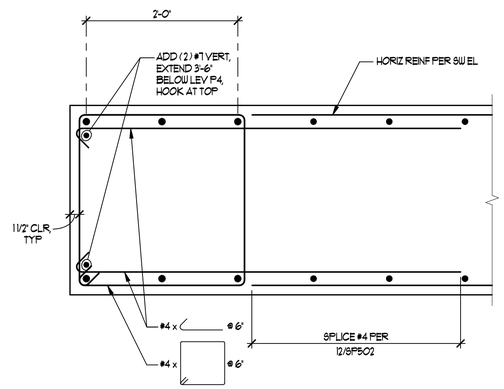

SW-1 AND SW-3 WALL BOUNDARY ABOVE LEVEL P4 6
1" = 1'-0"

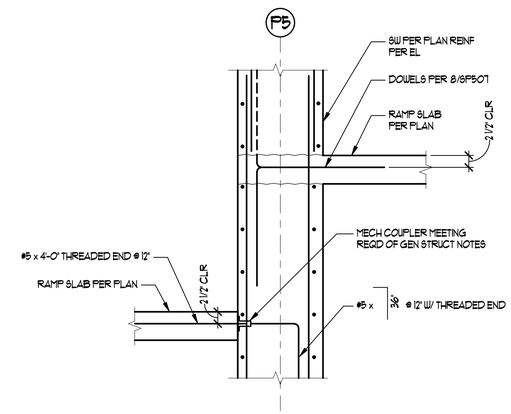

P5 SHEAR WALL TO SLAB DOWELS 7
3/4" = 1'-0"

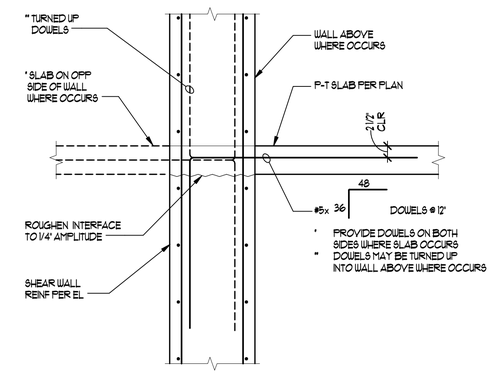

SHEAR WALL TO SLAB DETAILS 8
3/4" = 1'-0"

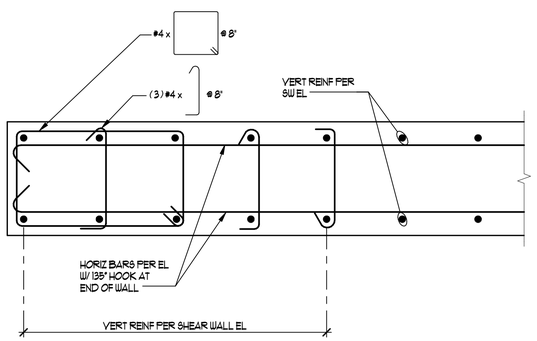

SW-2 & SW-4 WALL BOUNDARY 10
1" = 1'-0"

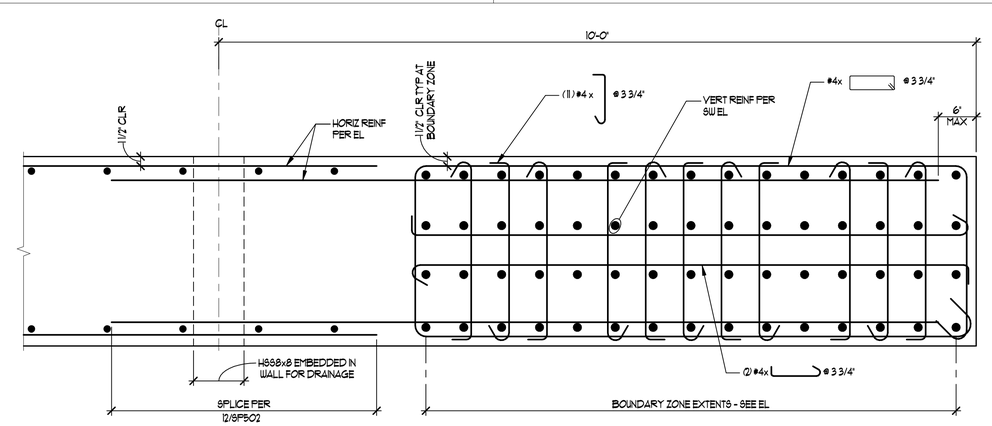

NOTES:
1. TIES SHALL EXTEND INTO FOOTING 1'-0" MINIMUM.
2. LONG REINFORCING SHALL BE PER GENERAL STRUCTURAL NOTES FOR SEISMIC DEFORMED BARS.
3. PROVIDE DOWELS IN FOOTING TO MATCH ALL LONG BARS.

SPECIAL BOUNDARY ELEMENT DETAIL, SW-1 & SW-3 12
1" = 1'-0"

RECORD DRAWINGS

RECORD DRAWING
THESE RECORD DRAWINGS HAVE BEEN PREPARED FROM CONTRACTOR FURNISHED INFORMATION. THERE IS NO GUARANTEE AS TO THE ACCURACY OR COMPLETENESS OF THE INFORMATION CONTAINED HEREIN. RMI WAS NOT RETAINED TO VERIFY THE FIELD CONDITIONS.
COURTNEY WILLOUGHBY
DATE: 12/24/18
REID MIDDLETON INC.

KUMIN
ARCHITECTURE INTERIORS PLANNING
1901 STREET, STE 200 ANCHORAGE, AK 99501
907.272.5561 KUMIN.COM

NEESER CONSTRUCTION, INC.
Reid Middleton
4300 B St., Suite 302 Anchorage, AK 99503
Phone: 907.562.3439 - www.reidmiddleton.com
Corporate License #AECC598

© Copyright Reid Middleton, Inc. 2017

Childrens Dental Clinic Building

4441 Diplomacy Drive, Anchorage AK 99508
Southcentral Foundation

No.	Description	Date

Drawn By: RLC
Checked By: SES
Date: 24 DEC 2018
Phase: RECORD DRAWINGS
Job No: 402016.015
SHEET TITLE: CONCRETE SHEAR WALL SECTIONS
SHEET NO: SP507

C:\Users\glangham\Documents\SCF CDC Garage_Structural RECORD DWGS_2015_glangham.rvt
12/21/2018 3:47:21 PM

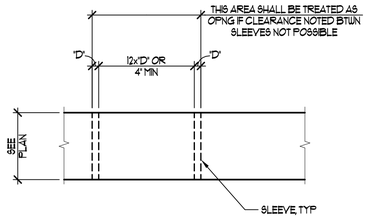

NOTE:

1. ALUMINUM CONDUIT OR SLEEVES SHALL NOT BE EMBEDDED IN CONCRETE. OTHER METAL CONDUIT OR SLEEVES SHALL NOT BE EMBEDDED IN CONCRETE UNLESS APPROVED BY ENGINEER IN WRITING. METAL SLEEVES SHALL BE GALVANIZED.

TYPICAL SLEEVE CRITERIA 1

NTS

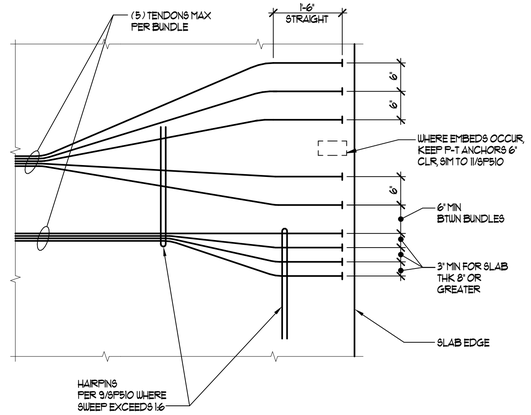

PLAN

TYPICAL P-T BUNDLE FLARE DETAIL 2

NTS

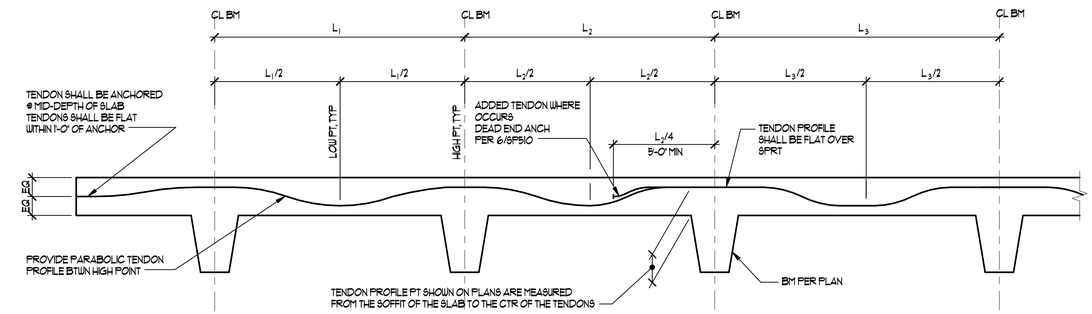

POST-TENSIONING

NOTE:

1. TEMPERATURE TENDONS SHALL BE AT MID-DEPTH OF SLAB WITH NO PROFILE.
2. WHERE CLOSURE POUR OCCURS, DRAPE TENDONS WITH PARABOLIC PROFILE WITH LOW POINT AS SHOWN AT THE CLOSURE POUR. TENDONS SHALL NOT BE PROFILED AS DOUBLE-CANTILEVER.

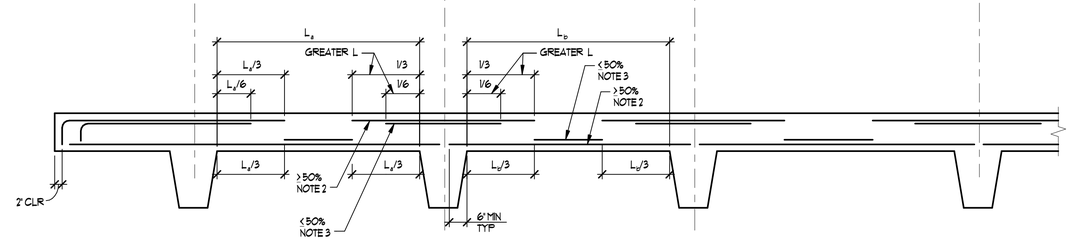

MILD REINFORCING

NOTES:

1. SEE PLAN FOR MILD REINFORCING SIZE AND SPACING.
2. UP TO HALF OF SPECIFIED BARS MAY BE SHORTENED AS SHOWN.
3. AT LEAST HALF OF SPECIFIED BARS SHALL BE FULL LENGTH.

TYPICAL POST-TENSIONED SLAB ELEVATION 8

NTS

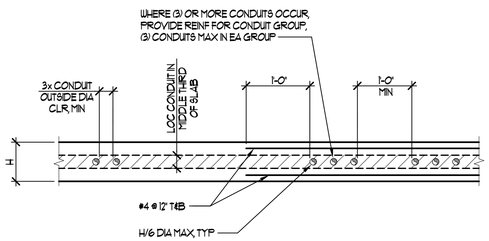

NOTES:

1. CONTRACTOR SHALL SUBMIT SHOP DRAWINGS INDICATING PLACEMENT OF CONDUIT IN POST-TENSIONED PANELS. SEE GENERAL NOTES.
2. CONDUIT PLACEMENT NOT MEETING THIS CRITERIA SHALL BE SUBMITTED TO ENGINEER FOR REINFORCING DESIGN.
3. PLACE CONDUIT IN ONE LAYER. CONDUIT RUNS SHALL NOT CROSS.
4. PROVIDE 2" MINIMUM CLEARANCE BETWEEN CONDUIT AND TENDONS.
5. ALUMINUM CONDUIT OR SLEEVES SHALL NOT BE EMBEDDED IN CONCRETE. OTHER METAL CONDUIT OR SLEEVES SHALL NOT BE EMBEDDED IN CONCRETE UNLESS APPROVED BY ENGINEER IN WRITING. METAL SLEEVES SHALL BE GALVANIZED.

TYPICAL CONDUIT CRITERIA 5

NTS

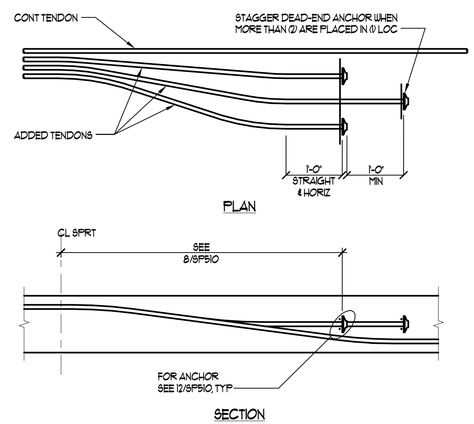

TYPICAL ADDED TENDON ANCHORAGE DETAIL 6

NTS

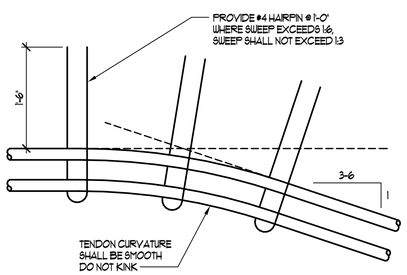

PLAN

TYPICAL P-T SWEEP DETAIL 9

NTS

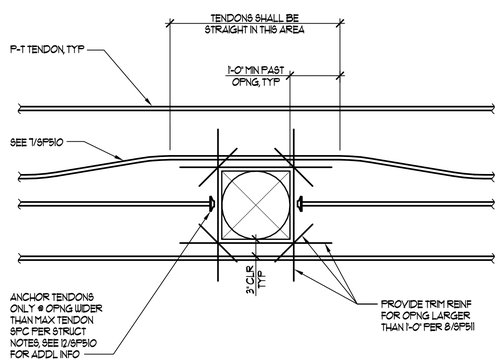

PLAN

TYPICAL TENDON DETAIL AT SLAB OPENING 10

NTS

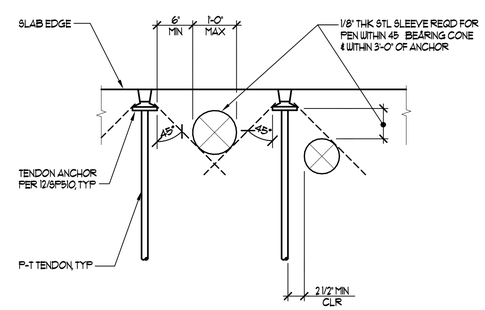

PLAN

PENETRATION AT TENDON ANCHORS DETAIL 11

NTS

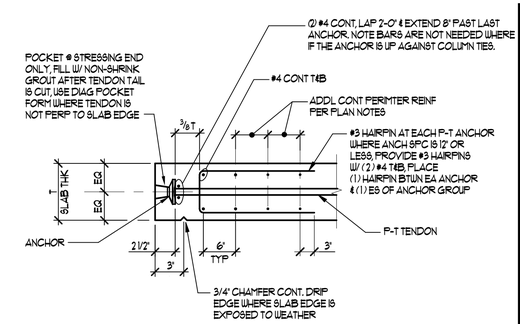

TYPICAL P-T SLAB ANCHORAGE DETAIL 12

NTS

RECORD DRAWINGS

RECORD DRAWING

THESE RECORD DRAWINGS HAVE BEEN PREPARED FROM CONTRACTOR FURNISHED INFORMATION. THERE IS NO GUARANTEE AS TO THE ACCURACY OR COMPLETENESS OF THE INFORMATION CONTAINED HEREIN. RMI WAS NOT RETAINED TO VERIFY THE FIELD CONDITIONS.

COURTNEY WILLOUGHBY
DATE: 12/24/18
REID MIDDLETON INC.

KUMIN
ARCHITECTURE INTERIORS PLANNING
1901 STORES BLVD ANCHORAGE, AK 99501
907.272.5363 907.272.5361

NEESER CONSTRUCTION, INC.
Reid Middleton
4300 B St., Suite 302 Anchorage, AK 99503
Phone: 907.562.3439 - www.reidmiddleton.com
Corporate License #AECC598

© Copyright Reid Middleton, Inc. 2017

Childrens Dental Clinic Building

4441 Diplomacy Drive, Anchorage AK 99508
Southcentral Foundation

No.	Description	Date

Drawn By: RLC
Checked By: SES
Date: 24 DEC 2018
Phase: RECORD DRAWINGS
Job No: 402016.015
SHEET TITLE: TYPICAL PT DETAILS

SHEET NO:

SP510

C:\Users\plaghas\Documents\SCF CDC Garage_Structural\ RECORD DWGS_2019_plaghas.rvt

12/21/2018 3:47:24 PM

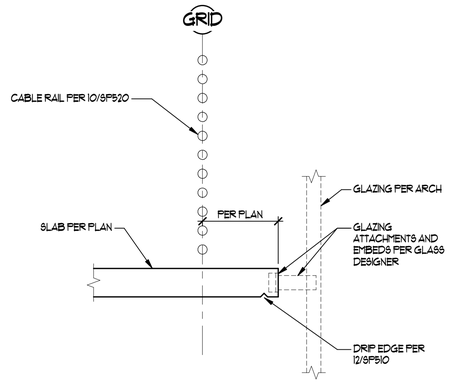

SLAB EDGE DETAIL 2
NTS

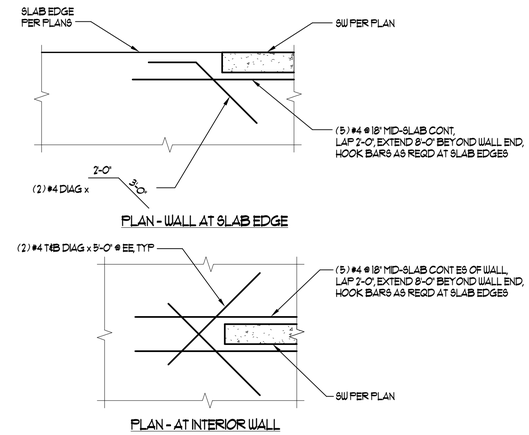

TYPICAL P-T SLAB TRIM REINFORCING AT SHEAR WALLS 3
NTS

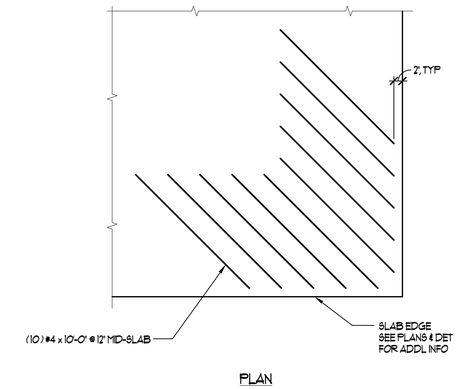

CORNER REINFORCING AT P-T SLAB EDGE 4
NTS

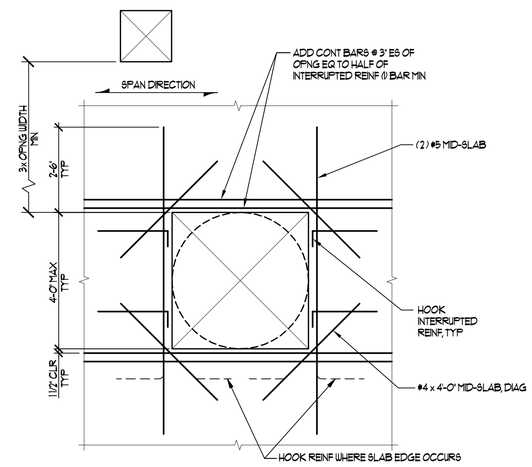

TYPICAL ONE-WAY SLAB OPENING 8
NTS

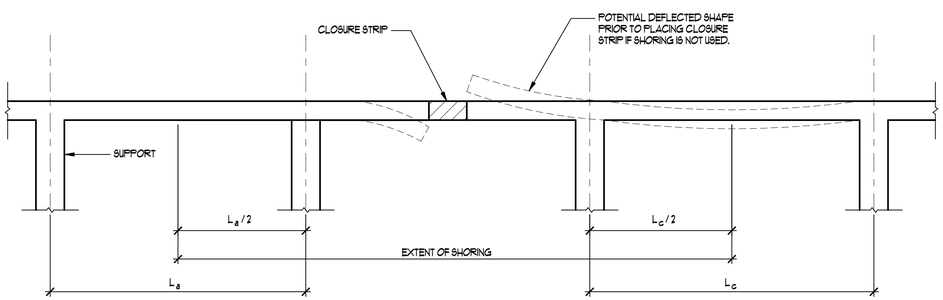

NOTES:

1. SHORING MUST BE SIZED FOR WEIGHT OF SLAB PLUS ALL CONSTRUCTION LOADS.
2. RE-SHORING CAN BE DONE PROVIDED THE RE-SHORE SYSTEM DOES NOT DEFLECT AXIALLY AND IF THE RE-SHORING PROCEDURE DOES NOT ALLOW THE SLAB TO DEFLECT VERTICALLY.

CLOSURE STRIP SHORING 10
NTS

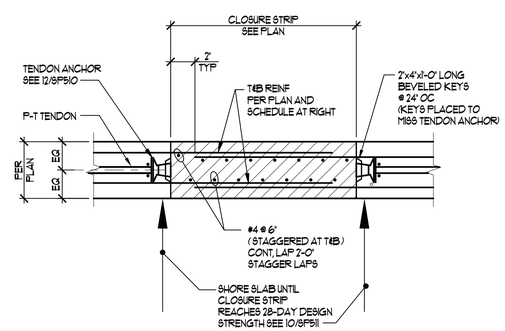

NOTE:

1. CLOSURE STRIP TO REMAIN OPEN 28 DAYS, MINIMUM.
2. SEE DETAIL 10/SP511 FOR EXPLANATION AND OF EXTENT AND DEMAND ON SHORING SYSTEM.

TYPICAL CLOSURE STRIP DETAIL 12
NTS

MARK	REINFORCING
A	#4 x 6'-0" @ 12" TOP
B	#5 x 11'-0" @ 12" BOT
C	#4 x 6'-0" @ 12" TOP
D	#5 x 11'-0" @ 9" BOT

NOTE:

SEE PLAN FOR EXTENT OF REINFORCING; SEE DETAIL AT LEFT FOR LAYOUT.

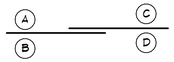

PLAN CALLOUT

RECORD DRAWING

THESE RECORD DRAWINGS HAVE BEEN PREPARED FROM CONTRACTOR FURNISHED INFORMATION. THERE IS NO GUARANTEE AS TO THE ACCURACY OR COMPLETENESS OF THE INFORMATION CONTAINED HEREIN. RMI WAS NOT RETAINED TO VERIFY THE FIELD CONDITIONS.

COURTNEY WILLOUGHBY
DATE: 12/24/18
REID MIDDLETON INC.

KUMIN
ARCHITECTURE INTERIORS PLANNING
1901 STEELE ST, STE 200 ANCHORAGE, AK 99503
907.272.5363 KUMIN.COM

NEESER CONSTRUCTION, INC.
Reid Middleton
4300 B St., Suite 302 Anchorage, AK 99503
Phone: 907.562.3439 - www.reidmiddleton.com
Corporate License #AECC598
© Copyright Reid Middleton, Inc. 2017

Childrens Dental Clinic Building

4441 Diplomacy Drive, Anchorage AK 99508
Southcentral Foundation

No.	Description	Date

Drawn By: RLC
Checked By: SES
Date: 24 DEC 2018
Phase: RECORD DRAWINGS
Job No: 402016.015
SHEET TITLE: TYPICAL PT DETAILS
SHEET NO: SP511

C:\Users\glogowski\Documents\SCF CDC Garage_Structural RECORD DWGS_2015_glogwski.rvt
12/21/2018 3:47:25 PM

RECORD DRAWINGS

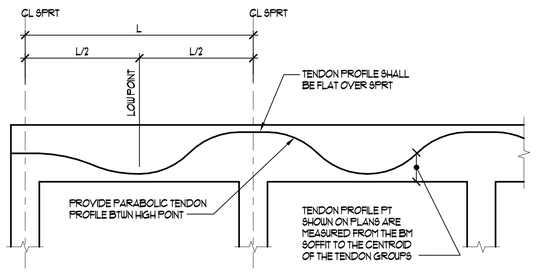

NOTE:

1. SEE BEAM ELEVATIONS FOR REBAR.

TYPICAL BEAM TENDON ELEVATION 2

NTS

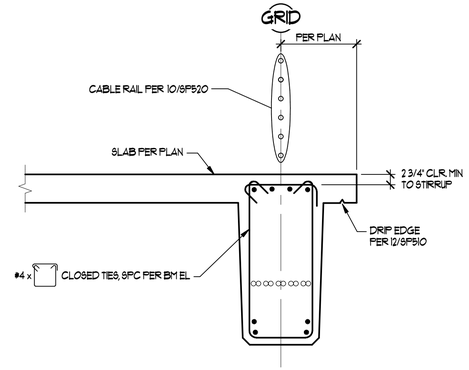

NOTE:

1. REFERENCE 4/SP512 FOR ADDITIONAL INFORMATION.

TYPICAL P-T BEAM DETAIL AT SLAB EDGE 3

3/4" = 1'-0"

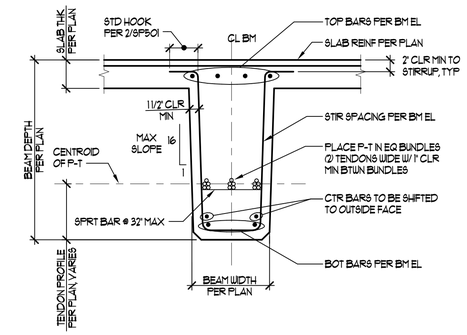

TYPICAL P-T BEAM DETAIL 4

NTS

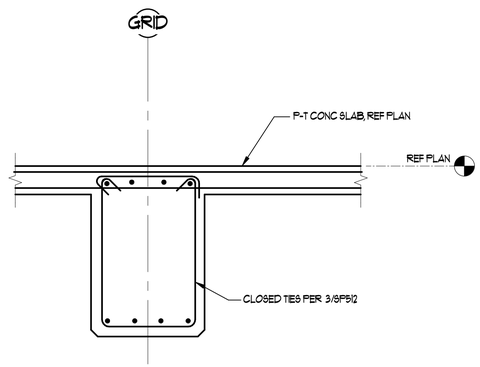

NOTE:

1. REFERENCE 4/SP512 FOR ADDITIONAL INFORMATION.

TYPICAL P-T GIRDER SECTION 6

NTS

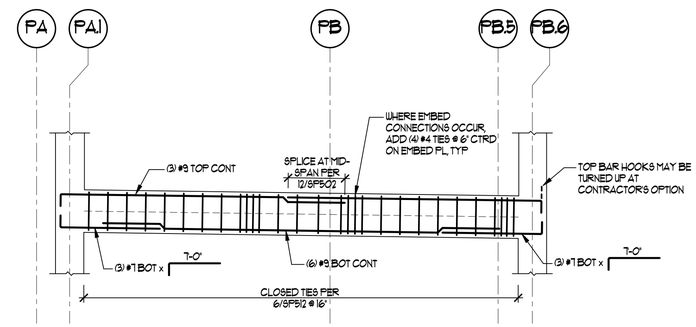

NOTES:

FOR TYPICAL INFORMATION SEE 12/SP512

GIRDER G-2 ELEVATION 8

3/16" = 1'-0"

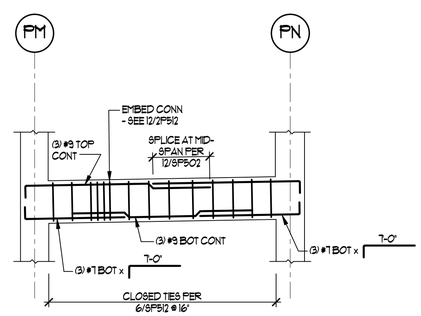

NOTES:

FOR TYPICAL INFORMATION SEE 12/SP512

GIRDER G-3 ELEVATION 10

3/16" = 1'-0"

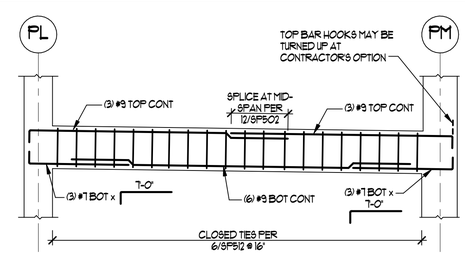

GIRDER G-4 TYPICAL EXTIOR GIRDER

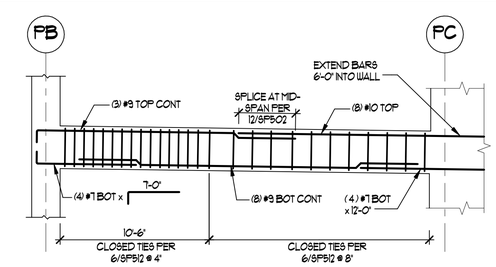

GIRDER G-1 TYPICAL INTERIOR GIRDER

BEAM ELEVATION NOTES:

1. OFFSET BENDS SHOWN AT ENDS OF CONTINUOUS STRAIGHT BARS ARE SHOWN FOR CLARITY ONLY. CONTRACTOR MAY PROVIDE STRAIGHT BARS WITHOUT BENDS.
2. SPLICE REINF. PER SCHEDULE OF DETAIL12/SP502, TYP. UNO.
3. SEE SHEETS SP512 AND SP513 FOR TYPICAL BEAM DETAILS.
4. CORE DRILLING OR ROTO-HAMMERING OF PT SLABS OR BEAMS IS NOT PERMITTED WITHOUT ENGINEER APPROVAL. SEE TYPICAL POST-TENSIONING NOTES.

TYPICAL GIRDER ELEVATIONS 12

3/16" = 1'-0"

RECORD DRAWING

THESE RECORD DRAWINGS HAVE BEEN PREPARED FROM CONTRACTOR FURNISHED INFORMATION. THERE IS NO GUARANTEE AS TO THE ACCURACY OR COMPLETENESS OF THE INFORMATION CONTAINED HEREIN. RMI WAS NOT RETAINED TO VERIFY THE FIELD CONDITIONS.

COURTNEY WILLOUGHBY
DATE: 12/24/18
REID MIDDLETON INC.

KUMIN
ARCHITECTURE INTERIORS PLANNING
1901 STEELE ST. STE.200 ANCHORAGE, AK 99503
907.272.5363 KUMIN.COM

NEESER CONSTRUCTION, INC.

Reid Middleton
4300 B St., Suite 302 Anchorage, AK 99503
Phone: 907.562.3439 - www.reidmiddleton.com
Corporate License #AECC598

© Copyright Reid Middleton, Inc. 2017

Childrens Dental Clinic Building

4441 Diplomacy Drive, Anchorage AK 99508

Southcentral Foundation

No.	Description	Date

Drawn By: RLC
Checked By: SES
Date: 24 DEC 2018
Phase: RECORD DRAWINGS
Job No: 402016.015
SHEET TITLE: TYPICAL BEAM SECTIONS AND ELEVATIONS
SHEET NO: SP512

C:\Users\glaginski\Documents\SCF CDC Garage_Structural\RECORD DWGS_2018_glaginski.rvt

12/21/2018 3:47:26 PM

RECORD DRAWINGS

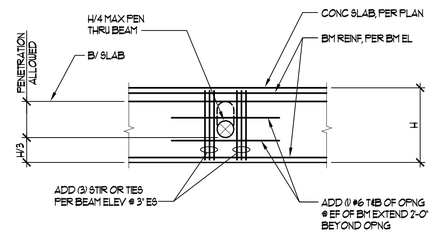

ADDED REBAR AT PENETRATIONS

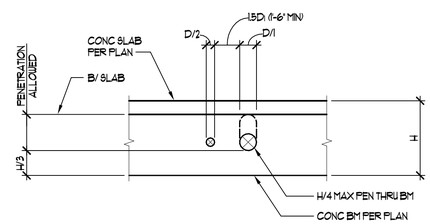

ADJACENT PENETRATIONS

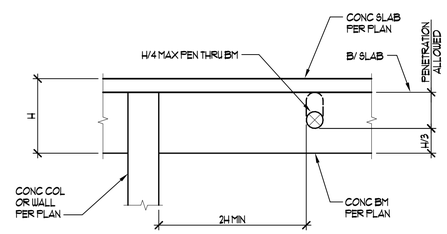

PENETRATIONS NEAR SUPPORTS

NOTES:

1. PROVIDE 3" MINIMUM CLEARANCE TO POST-TENSIONED TENDONS.
2. SEE BEAM ELEVATIONS FOR POST-TENSIONED TENDON PROFILES.
3. CONTRACTOR SHALL SUBMIT BEAM PENETRATION SHOP DRAWINGS FOR ENGINEERINGS APPROVAL PRIOR TO CONSTRUCTION.

TYPICAL BEAM PENETRATIONS 10
NTS

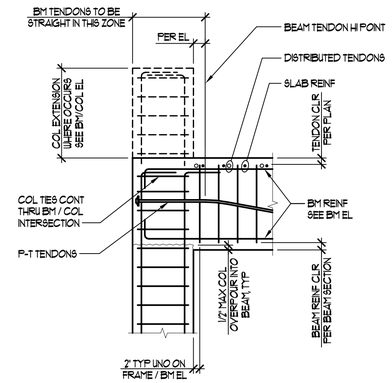

EXTERIOR TOP FLOOR - BEAM / COLUMN INTERSECTION

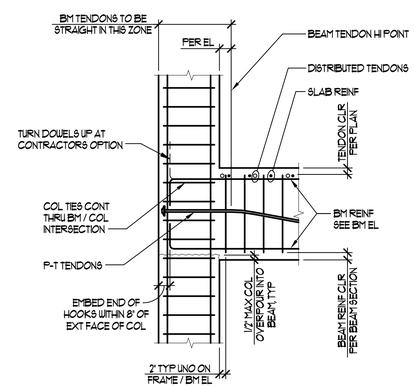

EXTERIOR - BEAM / COLUMN INTERSECTION

P-T BEAM EXTERIOR COLUMN INTERSECTIONS 11
NTS

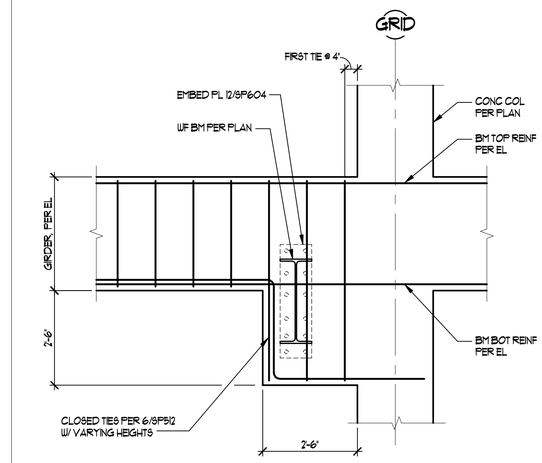

SKYBRIDGE CONNECTION DETAIL 4
1/2" = 1'-0"

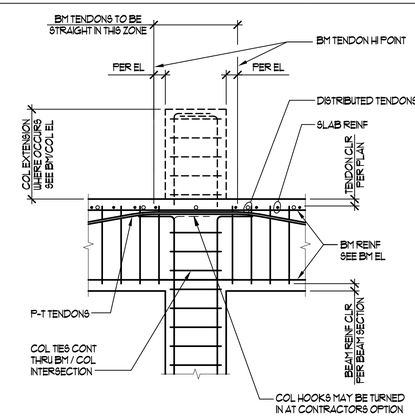

TYPICAL TOP FLOOR - BM/COL INTERSECTION

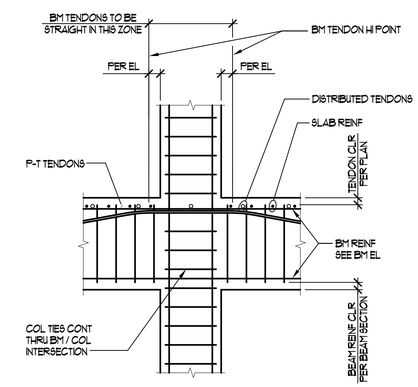

TYPICAL - BEAM / COLUMN INTERSECTION

P-T BEAM INTERIOR COLUMN INTERSECTIONS 12
NTS

RECORD DRAWINGS

RECORD DRAWING

THESE RECORD DRAWINGS HAVE BEEN PREPARED FROM CONTRACTOR FURNISHED INFORMATION. THERE IS NO GUARANTEE AS TO THE ACCURACY OR COMPLETENESS OF THE INFORMATION CONTAINED HEREIN. RMI WAS NOT RETAINED TO VERIFY THE FIELD CONDITIONS.

COURTNEY WILLOUGHBY
DATE: 12/24/18
REID MIDDLETON INC.

KUMIN
ARCHITECTURE INTERIORS PLANNING
9361 JEWEL LAKE RD. #200 ANCHORAGE, AK 99502
907.279.5561 907.279.5563

NEESER CONSTRUCTION, INC.
Reid Middleton
4300 B St., Suite 302 Anchorage, AK 99503
Phone: 907.562.3439 - www.reidmiddleton.com
Corporate License #AECC598
© Copyright Reid Middleton, Inc. 2017

Childrens Dental Clinic Building

4441 Diplomacy Drive, Anchorage AK 99508
Southcentral Foundation

No.	Description	Date

Drawn By: RLC
Checked By: SES
Date: 24 DEC 2018
Phase: RECORD DRAWINGS
Job No: 402016.015
SHEET TITLE: TYPICAL PT BEAM DETAILS
SHEET NO: SP513

C:\Users\plaginski\Documents\SCF CDC Garage_Structural RECORD DWGS_2018_plaginski.rvt
12/21/2018 3:47:27 PM

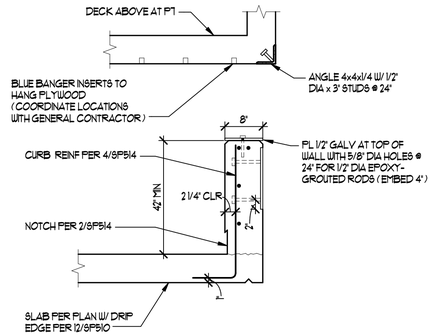

CURB AT SNOW CHUTE 1
3/4" = 1'-0"

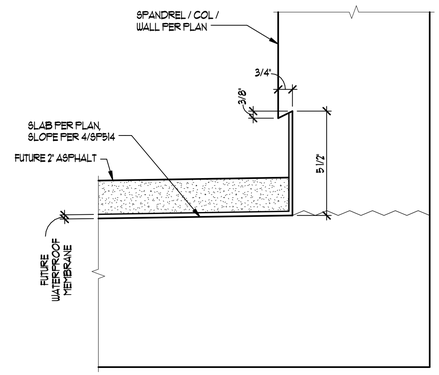

NOTCH FOR MEMBRANE AT ASPHALT EDGES 2
3" = 1'-0"

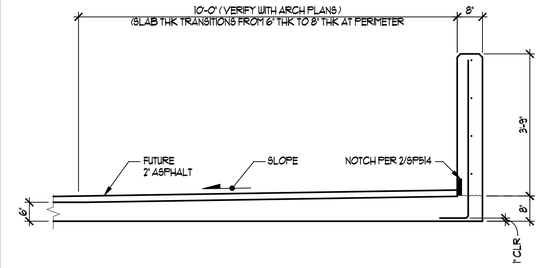

NOTE:

1. SEE 4/SP514 FOR ADDITIONAL INFORMATION.

ROOF SLAB EDGE DETAIL 3
1/2" = 1'-0"

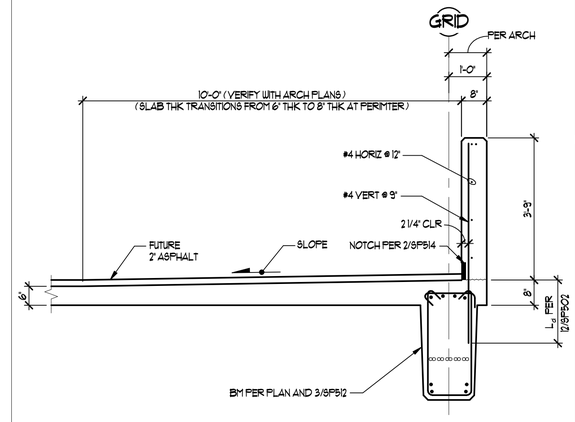

P-T BEAM ROOF EDGE DETAIL 4
1/2" = 1'-0"

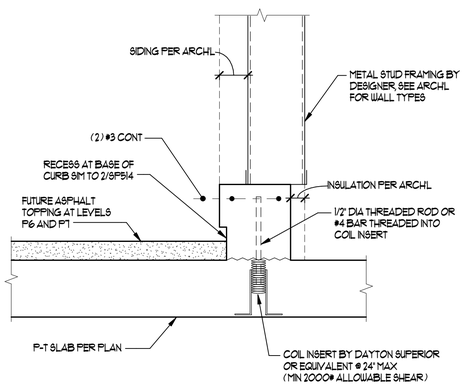

CONC CURB ON P-T DECK 5
NTS

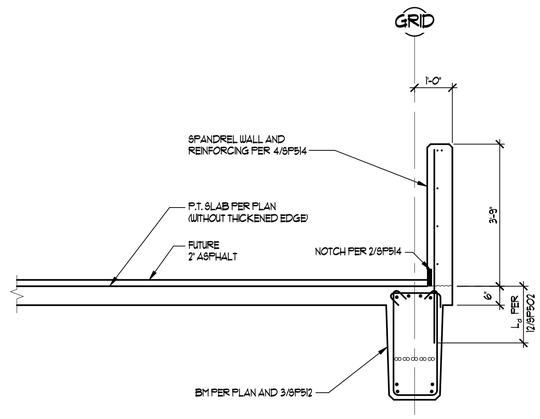

P-T BEAM ROOF EDGE - NO SLOPE 6
1/2" = 1'-0"

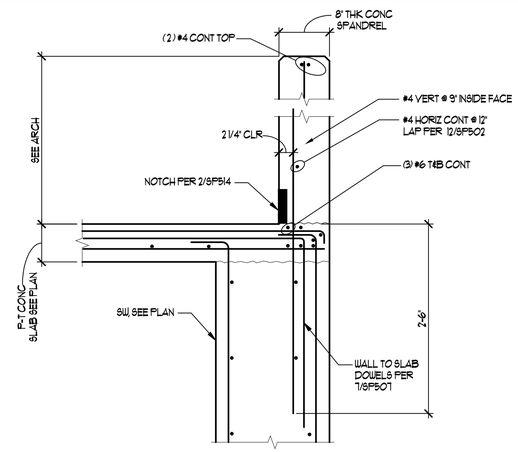

SECTION AT SHEAR WALL BELOW

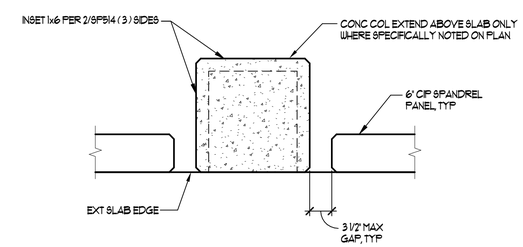

NOTES:

1. GAP FROM COLUMNS IS TYP AT ALL SPANDREL LOCATIONS, UNO.
2. GAP AT SPANDREL OR PANEL TO SHEAR WALL JOINT IS SIMILAR.

PLAN

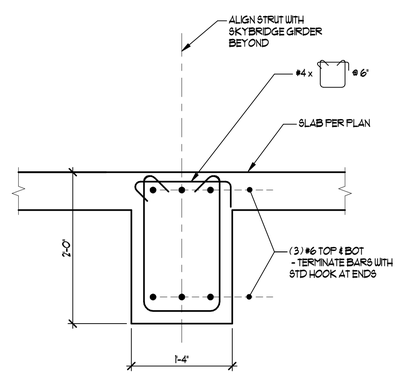

STRUT IN SLAB REINFORCING 10
1" = 1'-0"

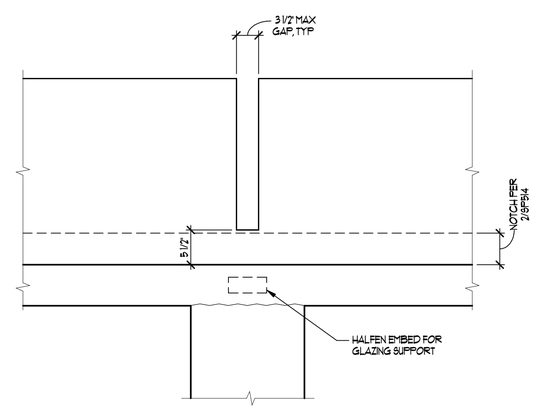

TYPICAL ELEVATION

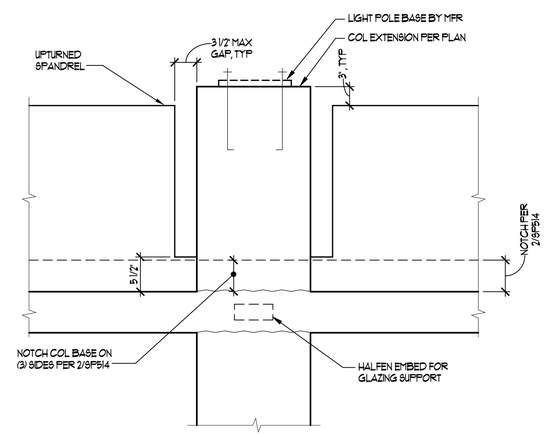

ELEVATION AT LIGHT-POLE LOCATIONS

TYPICAL SPANDREL BARRIER 12
NTS

RECORD DRAWING

THESE RECORD DRAWINGS HAVE BEEN PREPARED FROM CONTRACTOR FURNISHED INFORMATION. THERE IS NO GUARANTEE AS TO THE ACCURACY OR COMPLETENESS OF THE INFORMATION CONTAINED HEREIN. RMI WAS NOT RETAINED TO VERIFY THE FIELD CONDITIONS.

COURTNEY WILLOUGHBY
DATE: 12/24/18
REID MIDDLETON INC.

KUMIN
ARCHITECTURE INTERIORS PLANNING
1905 STREET STE.200 ANCHORAGE, 99501
907.272.5383 907.272.5383

NEESER CONSTRUCTION, INC.
Reid Middleton
4300 B St., Suite 302 Anchorage, AK 99503
Phone: 907.562.3439 - www.reidmiddleton.com
Corporate License #AECC598
© Copyright Reid Middleton, Inc. 2017

Childrens Dental Clinic Building

4441 Diplomacy Drive, Anchorage AK 99508
Southcentral Foundation

No.	Description	Date

Drawn By: RLC
Checked By: SES
Date: 24 DEC 2018
Phase: RECORD DRAWINGS
Job No: 402016.015
SHEET TITLE: CONCRETE DETAILS
SHEET NO: SP514

C:\Users\rlaughman\Documents\SCP CDC Garage_Structural RECORD DWGS_2015_jlaughman.rvt
12/21/2018 3:47:28 PM

RECORD DRAWINGS

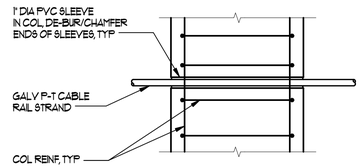

COLUMN ELEVATION

NOTES:

1. SEE 8/SP520 FOR ANCHORAGE LOCATIONS.
2. SEE THE GENERAL STRUCTURAL NOTES FOR ADDITIONAL INFORMATION.

BARRIER CABLE AT INTERMEDIATE COLUMN 2

NTS

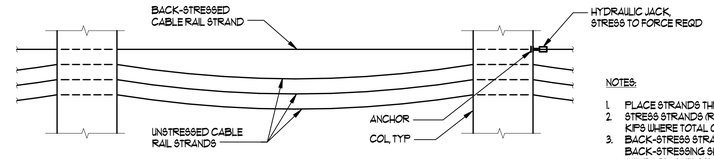

FIGURE 1

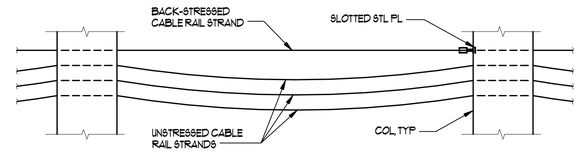

FIGURE 2

NOTES:

1. PLACE STRANDS THROUGH COLUMNS AND ANCHORS. INSERT WEDGES.
2. STRESS STRANDS (REFER TO FIGURE 1) TO A FORCE OF 3 KIPS AT TYPICAL LOCATIONS AND 2 KIPS WHERE TOTAL CABLE LENGTHS ARE 25 FEET OR LESS AND SEAT WEDGES.
3. BACK-STRESS STRANDS (REFER TO FIGURE 2). NOTE: THE LOSS OF FORCES RESULTING FROM BACK-STRESSING SHALL BE MONITORED TO ASSURE THAT FORCES SPECIFIED ARE ACHIEVED. THE BACK-STRESSING PROCEDURE SHALL BE AS FOLLOWS:
   A. STRESS STRANDS AS DIRECTED IN NOTE 2 ABOVE.
   B. STRESS STRANDS TO 28 KIPS ON THE OPPOSITE SIDE OF COLUMN IN ORDER TO PULL THE WEDGES INTO THE ANCHOR. INSURE THAT THE NOSE OF THE JACK BEARS ON THE SLOTTED STEEL PLATE NOT ON THE CONCRETE.
   C. EACH INDIVIDUAL CABLE RAIL STRAND SHALL BE COMPLETED AS ABOVE PRIOR TO MOVING ON TO THE NEXT STRAND.
   D. BEGIN WITH TOP STRAND IN EACH GROUP AND WORK DOWNWARDS.
4. SEE 2/SP520 AND 10/SP520 FOR ADDITIONAL INFORMATION.

CABLE RAIL STRESSING DETAIL 4

NTS

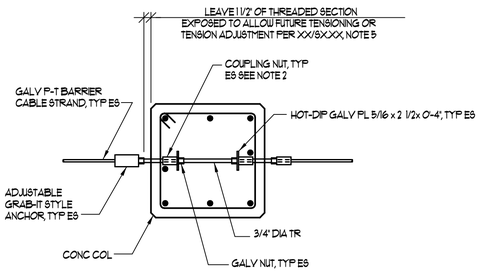

INTERIOR COLUMN (A)

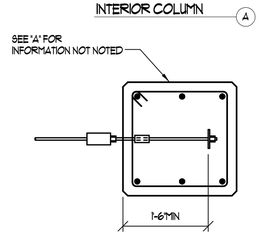

END COLUMN (B)

NOTES:

1. SEE ARCHITECTURAL FOR ADDITIONAL BARRIER CABLE INFORMATION.
2. COUPLING NUT SHALL BE HIGH STRENGTH SIMPSON HSCNU3/4 OR APPROVAL ALTERNATE. VERIFY COUPLING NUT THREADS ARE COMPATIBLE WITH ANCHOR THREADING PRIOR TO ORDERING.

BARRIER CABLE ADJUSTABLE ANCHOR DETAIL 9

NTS

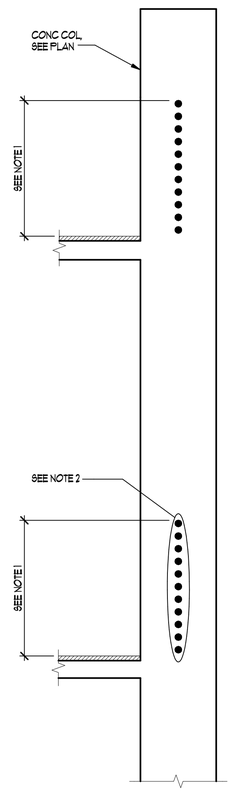

NOTES:

1. BARRIER CABLES WITHIN 44 INCHES FROM THE FINISHED FLOOR ELEVATION SHALL BE STRESSED TO 3 KIPS FINAL FORCE. SEATING LOSSES SHALL BE CONSIDERED IN DETERMINING THE JACKING FORCE REQUIRED TO ACHIEVE THE SPECIFIED FINAL FORCE.
2. (11) CABLES @ 4' OC CENTERED ON CONCRETE COLUMNS.
3. SEE ARCHITECTURAL FOR BARRIER CABLE LAYOUT.
4. SEE 4/SP520 FOR STRESSING INFORMATION.

BARRIER CABLE FINAL TENSION DIAGRAM 10

NTS

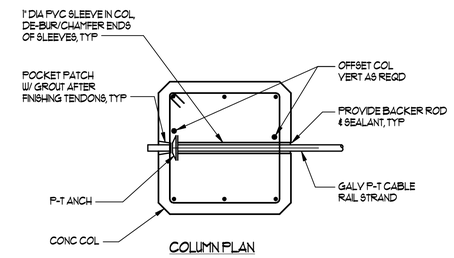

COLUMN PLAN

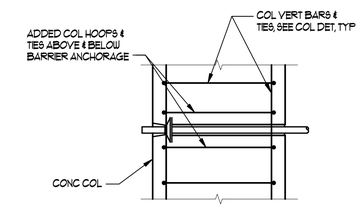

COLUMN ELEVATION

NOTE:

1. SEE XX/SXXX AND GENERAL STRUCTURAL NOTES FOR ADDITIONAL INFORMATION.

CABLE RAIL BARRIER ANCHORAGE DETAIL 8

NTS

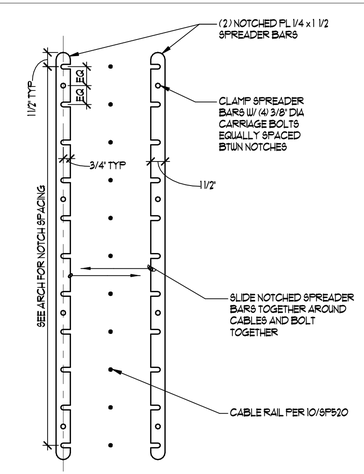

ALTERNATE SPREADER BAR DETAIL

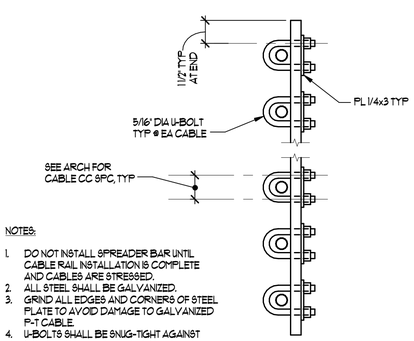

NOTES:

1. DO NOT INSTALL SPREADER BAR UNTIL CABLE RAIL INSTALLATION IS COMPLETE AND CABLES ARE STRESSED.
2. ALL STEEL SHALL BE GALVANIZED.
3. GRIND ALL EDGES AND CORNERS OF STEEL PLATE TO AVOID DAMAGE TO GALVANIZED P-T CABLE.
4. U-BOLTS SHALL BE SNUG-TIGHT AGAINST CABLE RAIL, PEEN THREADS.

CABLE RAIL SPREADER BAR DETAIL 12

NTS

RECORD DRAWINGS

RECORD DRAWING

THESE RECORD DRAWINGS HAVE BEEN PREPARED FROM CONTRACTOR FURNISHED INFORMATION. THERE IS NO GUARANTEE AS TO THE ACCURACY OR COMPLETENESS OF THE INFORMATION CONTAINED HEREIN. RMI WAS NOT RETAINED TO VERIFY THE FIELD CONDITIONS.

COURTNEY WILLOUGHBY
DATE: 12/24/18
REID MIDDLETON INC.

KUMIN
ARCHITECTURE INTERIORS PLANNING
1901 STORES, STE 200 ANCHORAGE, AK 99501
907.272.5363 KUMIN.COM

NEESER CONSTRUCTION, INC.
Reid Middleton
4300 B St., Suite 302 Anchorage, AK 99503
Phone: 907.562.3439 - www.reidmiddleton.com
Corporate License #AECC598

© Copyright Reid Middleton, Inc. 2017

Childrens Dental Clinic Building

4441 Diplomacy Drive, Anchorage AK 99508

Southcentral Foundation

No.	Description	Date

Drawn By: RLC
Checked By: SES
Date: 24 DEC 2018
Phase: RECORD DRAWINGS
Job No: 402016.015
SHEET TITLE: TYPICAL CABLE RAIL DETAIL

SHEET NO:

SP520

C:\Users\glasgowsk\Documents\SCF CDC Garage_Structural RECORD DWGS_2015_glasgowsk.rvt

12/27/2018 3:47:29 PM

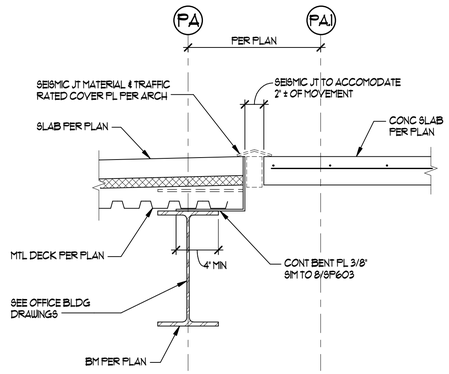

SECTION AT ALLEY SLAB 2

NTS

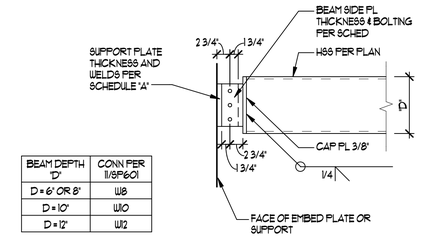

BEAM DEPTH "D"	CONN PER 11/SP601
D = 6" OR 8"	W8
D = 10"	W10
D = 12"	W12

STANDARD HSS BOLTED CONNECTIONS 4

NTS

HIGH LOAD BEAM CONN SCHEDULE "B"

BEAM SIZE	NUMBER AND SIZE OF A325N ERECTION BOLTS	PLATE DEPTH "D"	PLATE THICKNESS	WELD SIZE W
W8	(2) 7/8" DIA	5"	1/2"	5/16"
W10	(2) 7/8" DIA	6-1/2"	1/2"	5/16"
W12, W14	(2) 7/8" DIA	8-1/2"	1/2"	5/16"
W16	(2) 7/8" DIA	12"	1/2"	3/8"
W18	(3) 7/8" DIA	14"	5/8"	1/2"
W21	(3) 7/8" DIA	16"	3/4"	1/2"
W24, W27	(3) 7/8" DIA	19"	3/4"	1/2"

NOTES:

1. —● ON PLAN, INDICATES HIGH LOAD CONNECTION TYPE SHOWN ON SCHEDULE "B".
2. HIGH LOAD CONNECTION REQUIRED ONLY WHERE SPECIFICALLY NOTED ON PLAN (SEE LEGEND ON PLAN SHEETS) OR DETAILS.

STANDARD BOLTED BEAM CONN SCHEDULE "A"

BEAM SIZE	NUMBER & SIZE OF BOLTS REQUIRED	CONN PLATE THICKNESS	WELD SIZE W
W8	(2) 7/8" DIA	1/4"	1/4"
W10	(2) 7/8" DIA @ 4" GA	1/4"	1/4"
W12, C15	(3) 7/8" DIA	1/4"	1/4"
W14	(3) 7/8" DIA	1/4"	1/4"
W16	(4) 7/8" DIA	5/16"	1/4"
W18	(4) 7/8" DIA	5/16"	1/4"
W21	(5) 7/8" DIA	3/8"	5/16"
W24	(6) 7/8" DIA	3/8"	5/16"
W27	(7) 7/8" DIA	3/8"	5/16"
W30	(8) 7/8" DIA *	7/16"	3/8"
W33	(9) 7/8" DIA *	7/16"	3/8"
W36	(9) 7/8" DIA *	7/16"	3/8"

NOTES:

1. [●] ON PLAN, INDICATES NUMBER OF BOLTS IN CONNECTION, IF DIFFERENT FROM SCHEDULE.
2. * INDICATES USE OF HORIZONTAL SHORT SLOTTED HOLES IN THE PLATE AT COLUMN CONNECTIONS ONLY.
3. FOR BEAM TO COLUMN WEB CONNECTION AT W14 AND SMALLER COLUMNS, SEE.

EMBEDDED PLATE CONNECTION SCHEDULE "G"

CONNECTION TYPE	NUMBER OF BOLTS	EMBED PLATE SIZE	NUMBER OF HORIZONTAL ROWS OF STUDS
2DLE	(2) 7/8" DIA	5/8"x10"x1-0"	(2) ROWS OF 2
3DLE	(3) 7/8" DIA	3/4"x10"x1-0"	(2) ROWS OF 2
4DLE	(4) 7/8" DIA	3/4"x10"x1-6"	(3) ROWS OF 2
5DLE	(5) 7/8" DIA	3/4"x10"x2-0"	(4) ROWS OF 2
6DLE	(6) 7/8" DIA	3/4"x2-0"x2-0"	(3) ROWS OF 3

NOTES:

1. [xDLE] ON PLAN, INDICATES CONNECTION TYPE SHOWN ON SCHEDULE "G".
2. BOLTS 7/8" DIAMETER A325N, TYPICAL.

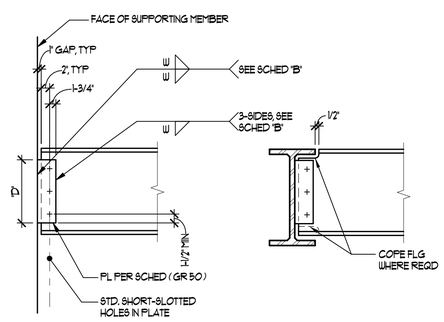

BEAM TO COL OR EMBED

BEAM TO BEAM

HIGH-LOAD WELDED BEAM CONNECTIONS 10

NTS

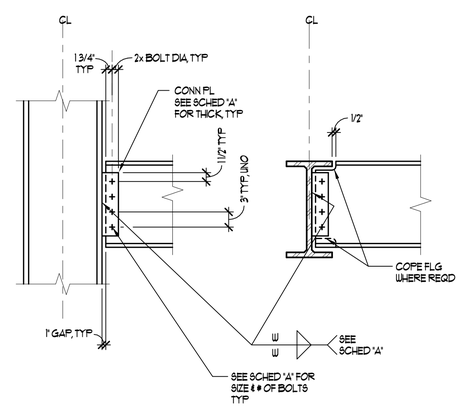

BEAM TO COLUMN OR EMBED

BEAM TO BEAM

STANDARD BOLTED BEAM CONNECTIONS 11

NTS

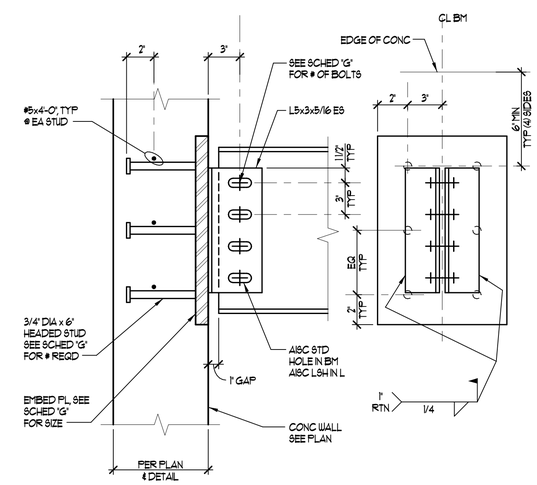

EMBEDDED PLATE CONNECTION 12

NTS

RECORD DRAWINGS

RECORD DRAWING

THESE RECORD DRAWINGS HAVE BEEN PREPARED FROM CONTRACTOR FURNISHED INFORMATION. THERE IS NO GUARANTEE AS TO THE ACCURACY OR COMPLETENESS OF THE INFORMATION CONTAINED HEREIN. RMI WAS NOT RETAINED TO VERIFY THE FIELD CONDITIONS.

COURTNEY WILLOUGHBY
DATE: 12/24/18
REID MIDDLETON INC.

KUMIN
ARCHITECTURE INTERIORS PLANNING
1901 STARSET ST #200 ANCHORAGE, AK 99501
907-272-5363

NEESER CONSTRUCTION, INC.
Reid Middleton
4300 B St., Suite 302 Anchorage, AK 99503
Phone: 907-562-3439 - www.reidmiddleton.com
Corporate License #AECC598

© Copyright Reid Middleton, Inc. 2017

Childrens Dental Clinic Building

4441 Diplomacy Drive, Anchorage AK 99508

Southcentral Foundation

No.	Description	Date

Drawn By: RLC
Checked By: SES
Date: 24 DEC 2018
Phase: RECORD DRAWINGS
Job No: 402016.015
SHEET TITLE: TYPICAL STEEL DETAILS

SHEET NO:

SP601

C:\Users\glagnate\Documents\SCT CDC Garage_Structural RECORD DWGS_2015_glagnate.rvt

12/21/2018 3:47:32 PM

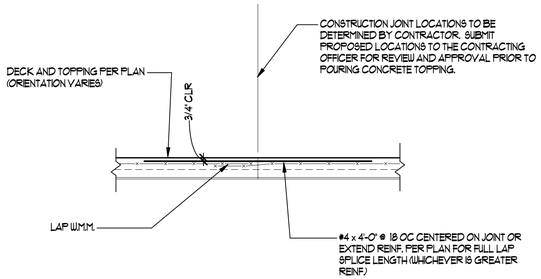

CONSTRUCTION JOINT IN COMPOSITE DECK 1

NTS

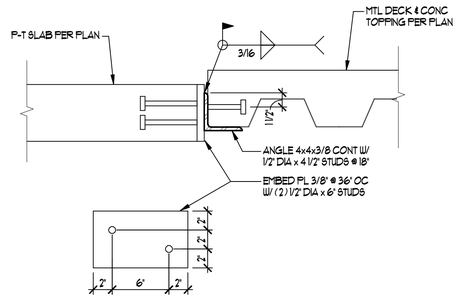

SLAB TO METAL DECK DETAIL 2

1 1/2" = 1'-0"

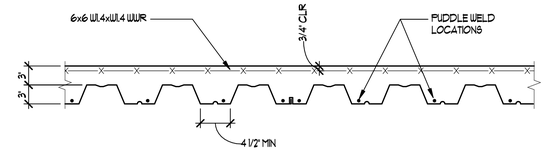

TYPE = ASC 3W OR VERCO W3 FORMLOK, G60 GALV W/ FOLLOWING MIN PROPERTIES:

Fy = 38 KSI, PANEL WIDTH = 36"

20GA	18GA	16GA
I = .896 IN^4	I = 1.203 IN^4	I = 1.509 IN^4
S = +.534/-.564 IN^3	S = +.767/-.767 IN^3	S = +.960/-.960 IN^3

3" TOPPING

	20GA	18GA	16GA
SINGLE SPAN CONDITIONS	9'-0"	11'-0"	12'-0"
DOUBLE SPAN CONDITIONS	10'-0"	12'-0"	13'-0"
TRIPLE SPAN CONDITIONS	11'-0"	13'-0"	14'-0"

NOTES:

1. USE GAGE OF DECK PER SPAN TABLE AT LEFT (SPAN TABLES ASSUME SHORING WILL NOT BE USED). DECK SHALL HAVE A 150 PSF SUPERIMPOSED LOAD CAPACITY.
2. PROVIDE (4) 1/2" DIA EFFECTIVE PUDDLE WELDS PER SHEET TO ALL SUPPORTS PERPENDICULAR TO DECK FLUTES. PROVIDE 1/2" DIA EFFECTIVE PUDDLE WELDS @ 24" OC TO ALL SUPPORTS PARALLEL TO FLUTES.
3. CONNECT DECK SEAMS WITH BUTTON PUNCHES @ 36" OC.
4. DECK MUST STRICTLY MEET CRITERIA LISTED INCLUDING ICC-ES RESEARCH REPORT ALLOWABLE SUPERIMPOSED LOADS. SUBMIT DECK INFORMATION TO ENGINEER PRIOR TO BEGINNING SHOP DRAWINGS.
5. REINFORCE DECK OPENINGS PER 10/SP603, UNO DECK OPENINGS MAY NOT BE SHOWN ON PLAN - SEE ARCHITECTURAL & MECHANICAL FOR ADDITIONAL INFORMATION.
6. SEE 1/SP602 FOR CONSTRUCTION JOINTS.

3" FLOOR DECK WITH 3" CONCRETE TOPPING 4

NTS

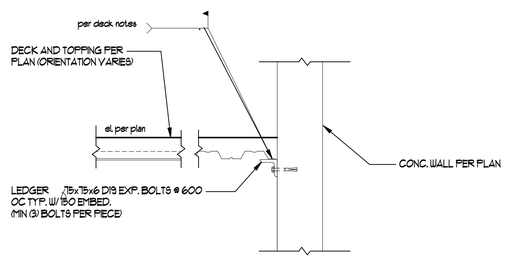

NOTES:

1. D19 A307 ANCHOR BOLTS MAY BE SUBSTITUTED ON AN EQUAL BASIS WITH EXPANSION BOLTS (EMBED 150).
2. LEDGER SHALL OCCUR AT ALL INTERSECTIONS OF FLOOR DECK AND CONCRETE WALLS, UNLESS OTHERWISE NOTED.

COMPOSITE DECK CONNECTION TO WALL 6

NTS

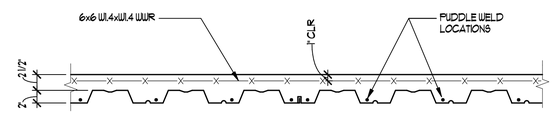

Fy = 38 KSI, PANEL WIDTH = 36"

20GA	18GA
I = .423 IN^4	I = .555 IN^4
S = +.361/-.370 IN^3	S = +.510/-.511 IN^3

2-1/2" TOPPING

	20GA	18GA
SINGLE SPAN CONDITIONS	7'-6"	9'-0"
DOUBLE SPAN CONDITIONS	8'-6"	10'-0"
TRIPLE SPAN CONDITIONS	9'-6"	11'-0"

NOTES:

1. USE GAGE OF DECK PER SPAN TABLE AT LEFT (SPAN TABLES ASSUME SHORING WILL NOT BE USED). DECK SHALL HAVE 150 PSF SUPERIMPOSED LOAD CAPACITY.
2. PROVIDE (4) 1/2" DIA EFFECTIVE PUDDLE WELDS PER SHEET TO ALL SUPPORTS PERPENDICULAR TO DECK FLUTES. PROVIDE 1/2" DIA EFFECTIVE PUDDLE WELDS @ 24" OC TO ALL SUPPORTS PARALLEL TO FLUTES.
3. CONNECT DECK SEAMS WITH BUTTON PUNCHES @ 36" OC.
4. DECK MUST STRICTLY MEET CRITERIA LISTED INCLUDING ICC-ES RESEARCH REPORT ALLOWABLE SUPERIMPOSED LOADS. SUBMIT DECK INFORMATION TO ENGINEER PRIOR TO BEGINNING SHOP DRAWINGS.
5. REINFORCE DECK OPENINGS PER 10/SP603, UNO DECK OPENINGS MAY NOT BE SHOWN ON PLAN - SEE ARCHITECTURAL & MECHANICAL FOR ADDITIONAL INFORMATION.
6. SEE 1/SP602 FOR CONSTRUCTION JOINTS.

2" FLOOR DECK WITH 2-1/2" CONCRETE TOPPING 8

NTS

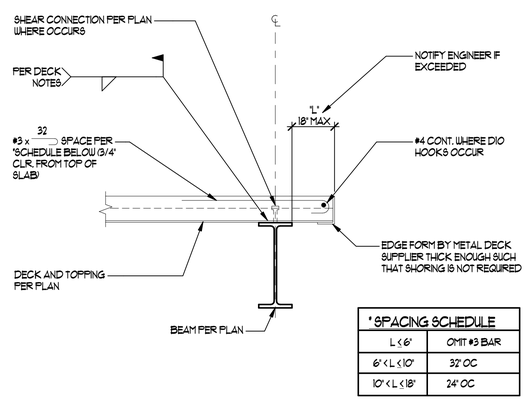

* SPACING SCHEDULE	
L ≤ 6'	OMIT #3 BAR
6' < L ≤ 10'	32" OC
10' < L ≤ 18'	24" OC

COMPOSITE DECK EDGE PERP 10

NTS

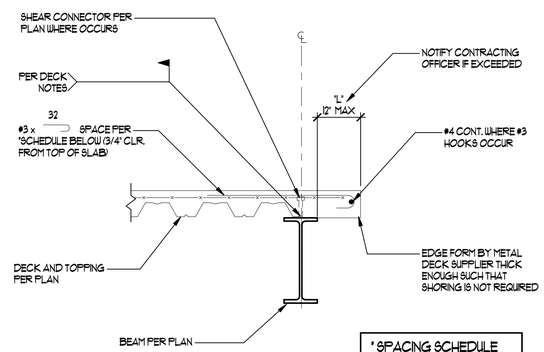

* SPACING SCHEDULE	
L ≤ 4'	OMIT #3 BAR
4' < L ≤ 8'	32" OC
8 < L ≤ 12'	24" OC

COMPOSITE DECK EDGE PARALLEL 11

NTS

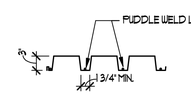

TYPE = ASC DGN-24 OR VERCO PLN-24, G60 GALVANIZED W/ FOLLOWING MIN. PROPERTIES:

Fy = 33ksi, PANEL WIDTH = 24"

20 GA	18 GA
I = 0.837 in^4	I = 1.223 in^4
S = +0.467 / - 0.554 in^3	S = +0.689 / - 0.765 in^3

1. MAXIMUM DECK SPAN = 10'-0" C TO C (TWO OR MORE CONTINUOUS SPANS) USE HEAVIER GAGE WHERE DECK REQD FOR SINGLE SPAN CONDITIONS OVER 10'-0" C TO C.
2. PROVIDE (4) 1/2" DIA EFFECTIVE PUDDLE WELDS PER SHEET TO ALL SUPPORTS PERPENDICULAR TO DECK FLUTES.
3. PROVIDE 1/2" DIA EFFECTIVE PUDDLE WELDS AT 12" OC TO ALL BEAMS PARALLEL TO DECK FLUTES AND WHERE DECK ORIENTATION CHANGES. PROVIDE 1/2" DIA EFFECTIVE PUDDLE WELDS @ 24" OC TO OTHER SUPPORTS PARALLEL TO DECK FLUTES.
4. CONNECT DECK SEAMS AT 24" OC WITH THE PUNCHLOK SYSTEM FOR VERCO DECK OR THE DELTAGRIP SYSTEM FOR ASC DECK, U.O.N PER PLAN.
5. DECK MUST STRICTLY MEET CRITERIA LISTED, INCLUDING CURRENT ICC-ES RESEARCH REPORT ALLOWABLE SHEAR LOADS. SUBMIT DECK INFORMATION TO ENGINEER PRIOR TO BEGINNING SHOP DRAWINGS.
6. REINFORCE DECK OPENINGS PER 3/SP603 U.O.N. DECK OPENINGS MAY NOT BE SHOWN ON PLAN - SEE ARCHL & MECHL FOR ADDITIONAL INFO.

3" METAL ROOF DECK 12

NTS

RECORD DRAWINGS

RECORD DRAWING

THESE RECORD DRAWINGS HAVE BEEN PREPARED FROM CONTRACTOR FURNISHED INFORMATION. THERE IS NO GUARANTEE AS TO THE ACCURACY OR COMPLETENESS OF THE INFORMATION CONTAINED HEREIN. RMI WAS NOT RETAINED TO VERIFY THE FIELD CONDITIONS.

COURTNEY WILLOUGHBY
DATE: 12/24/18
REID MIDDLETON INC.

KUMIN
ARCHITECTURE INTERIORS PLANNING
1901 STEELE ST. STE.200 ANCHORAGE, AK 99503
907.272.5363 KUMIN.COM

NEESER CONSTRUCTION, INC.
Reid Middleton
4300 B St., Suite 302 Anchorage, AK 99503
Phone: 907.562.3439 - www.reidmiddleton.com
Corporate License #AECC598

© Copyright Reid Middleton, Inc. 2017

Childrens Dental Clinic Building

4441 Diplomacy Drive, Anchorage AK 99508

Southcentral Foundation

No.	Description	Date

Drawn By: RLC
Checked By: SES
Date: 24 DEC 2018
Phase: RECORD DRAWINGS
Job No: 402016.015
SHEET TITLE: TYPICAL STEEL DETAILS
SHEET NO: SP602

C:\Users\plogan\AppData\Local\Temp\AcPublish_1244\402016.015_SP602.dwg
12/27/2018 3:47:35 PM

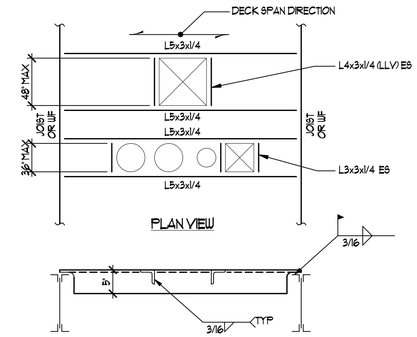

SECTION

NOTES:

1. WELD DECK TO ANGLES WITH 1/2" DIA PUDDLE WELDS @ 6" OC ALL AROUND OPENING.
2. NO REINFORCING REQUIRED FOR SINGLE OPENINGS 6" DIAMETER OR 6" SQUARE OR LESS.
3. LARGER OPENINGS MUST BE COORDINATED WITH ARCHITECT & ENGINEER.

REINF AT MISC ROOF DECK OPENINGS 3

NTS

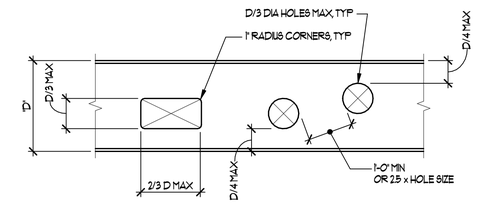

NOTES:

1. CONTRACTOR SHALL COORDINATE SIZES AND LOCATIONS OF ALL BEAM PENETRATIONS WITH MECHANICAL DRAWINGS. ALL PENETRATIONS LARGER THAN 2" DIA SHALL BE SHOWN ON SHOP DRAWINGS OR SKETCHES AND SHALL BE SUBMITTED TO THE CONTRACTING OFFICER FOR APPROVAL. FIELD CUTTING NOT PERMITTED WITHOUT APPROVAL.
2. OPENINGS MAY OCCUR IN MIDDLE HALF OF BEAM LENGTH ONLY.
3. NO CUTTING SHALL OCCUR IN TOP OR BOTTOM QUARTER OF BEAM DEPTH.
4. ADJACENT OPENINGS SHALL BE SPACED AT THE LESSER OF 1'-0" OR 2.5 x LARGER OPENING SIZE, EDGE TO EDGE.
5. MAXIMUM SIZES OF OPENINGS SHALL BE D/3 DIA OR D/3 x 2/3 D.
6. NO OPENINGS SHALL OCCUR WITHIN 1'-0" OF AN ADJACENT BEAM CONNECTOR.
7. REQUIRED OPENINGS NOT MEETING ABOVE CRITERIA SHALL BE SUBMITTED TO THE CONTRACTING OFFICER FOR REINFORCING DESIGN.

BEAM PENETRATION DETAIL 4

NTS

NOTES:

1. FOR HOLES 4" DIAMETER OR LESS, OR 4" SQUARE OR LESS: NO STRENGTHENING IS REQUIRED PROVIDED THAT HOLES ARE NOT CLOSER THAN 12" OC
2. FOR HOLES GREATER THAN 4" UP TO 8" DIAMETER OR 8" SQUARE: PROVIDED HOLES ARE NOT CLOSER THAN 3'-0" OC
3. FOR HOLES GREATER THAN 8" UP TO 24" DIAMETER OR 24" SQUARE: USE L2x2x3/16 ALONG (2) SIDES AS SHOWN
4. FOR HOLES GREATER THAN 24" DIAMETER OR 24" SQUARE: SEE PARTIAL PLAN

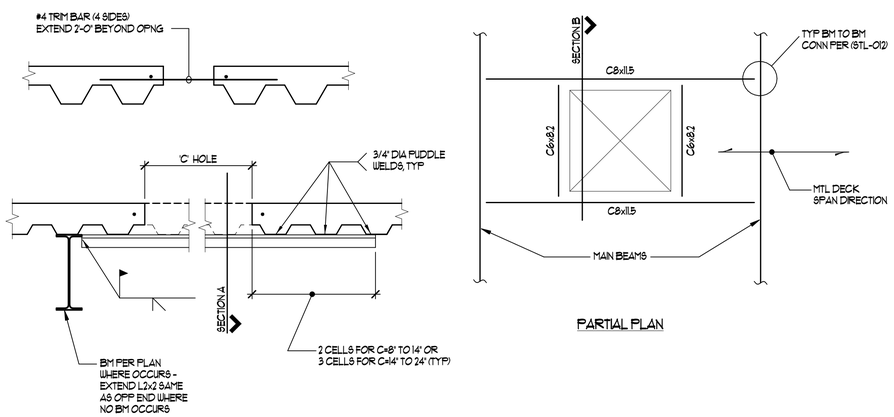

PARTIAL PLAN

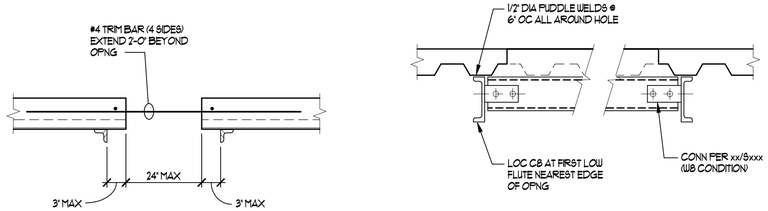

SECTION A

SECTION B

REINFORCING AT COMPOSITE SLAB OPENINGS 10

NTS

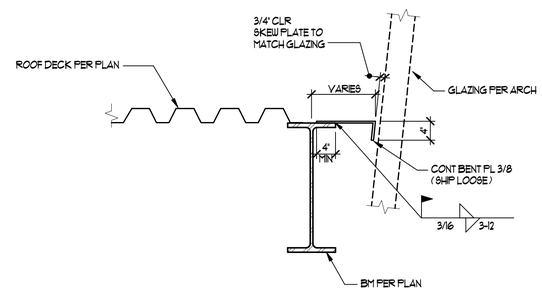

SKY BRIDGE SLAB EDGE AT ROOF 7

3/4" = 1'-0"

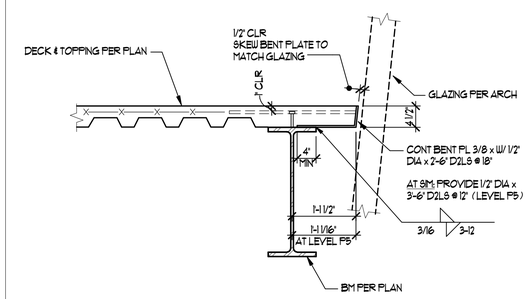

SKY BRIDGE SLAB EDGE 8

3/4" = 1'-0"

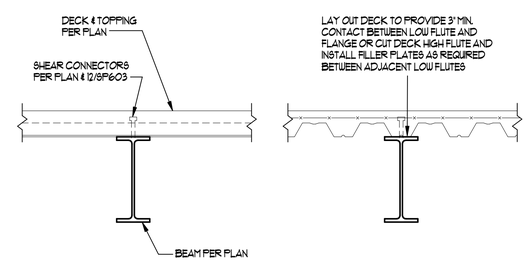

DECK PERPENDICULAR TO BEAM

DECK PARALLEL TO BEAM

METAL DECK OVER COMPOSITE BEAMS 11

NTS

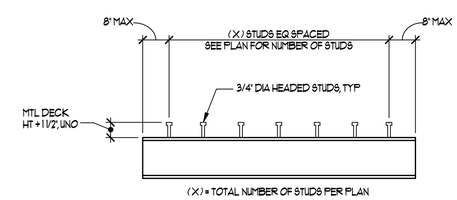

TYPICAL BEAM

NOTES:

1. CENTER CONNECTORS OVER BEAMS AND GIRDERS, TYPICAL.
2. WHERE DECK FLUTES ARE PERPENDICULAR TO BEAMS, USE (2) STUDS PER FLUTE @ 3" OC WHERE NUMBER OF STUDS EXCEEDS NUMBER OF FLUTES.
3. SEE GENERAL STRUCTURAL NOTES FOR STUD REQUIREMENTS.

COMPOSITE HEADED STUDS 12

NTS

RECORD DRAWING

THESE RECORD DRAWINGS HAVE BEEN PREPARED FROM CONTRACTOR FURNISHED INFORMATION. THERE IS NO GUARANTEE AS TO THE ACCURACY OR COMPLETENESS OF THE INFORMATION CONTAINED HEREIN. RMI WAS NOT RETAINED TO VERIFY THE FIELD CONDITIONS.

COURTNEY WILLOUGHBY
DATE: 12/24/18
REID MIDDLETON INC.

KUMIN
ARCHITECTURE INTERIORS PLANNING
1905 STREET STREET
ANCHORAGE, AK 99501
907-272-5383

NEESER CONSTRUCTION, INC.
Reid Middleton
4300 B St., Suite 302 Anchorage, AK 99503
Phone: 907 562-3439 - www.reidmiddleton.com
Corporate License #AECC598

© Copyright Reid Middleton, Inc. 2017

Childrens Dental Clinic Building

4441 Diplomacy Drive, Anchorage AK 99508
Southcentral Foundation

No.	Description	Date

Drawn By: RLC
Checked By: SES
Date: 24 DEC 2018
Phase: RECORD DRAWINGS
Job No: 402016.015
SHEET TITLE: TYPICAL STEEL DETAILS

SHEET NO:

SP603

C:\Users\glagnier\Documents\SCF CDC Garage_Structural\RECORD DWGS_2018_glagnier.rvt

12/21/2018 3:47:36 PM

RECORD DRAWINGS

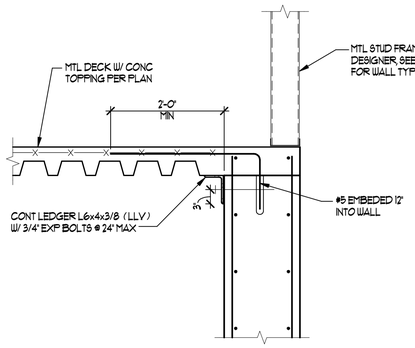

TYPICAL WALL SECTION 1
3/4" = 1'-0"

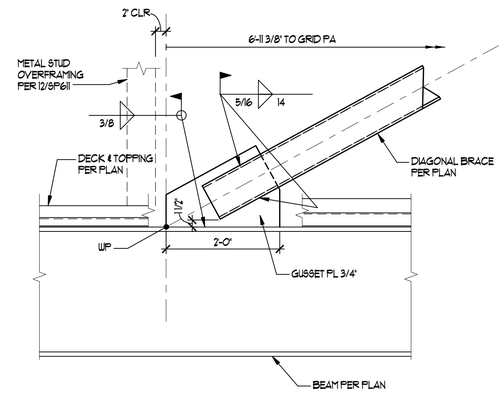

HSS BRACE CONN TO SKY BRIDGE GIRDER 2
3/4" = 1'-0"

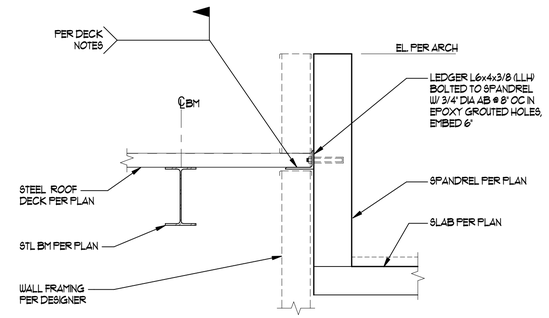

SKYBRIDGE DECK CONN AT P7 3
3/4" = 1'-0"

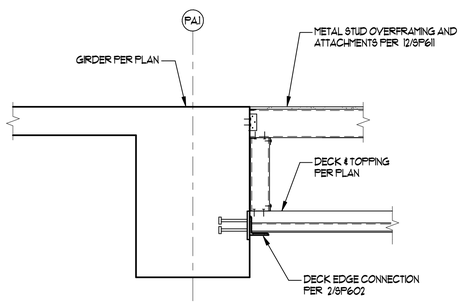

P5 SKYBRIDGE DECK CONN TO CONC 5
3/4" = 1'-0"

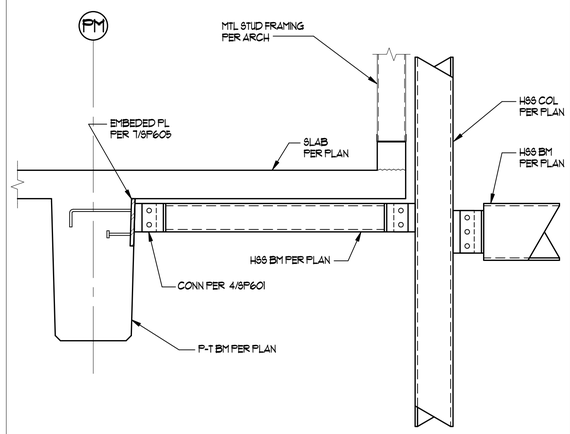

HSS BEAM TO P-T BEAM CONN DETAIL 6
3/4" = 1'-0"

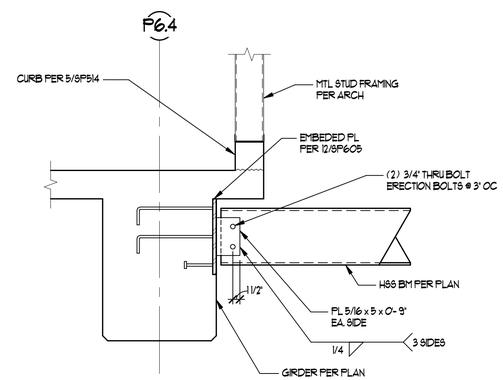

HSS BEAM TO GIRDER CONN DETAIL 7
3/4" = 1'-0"

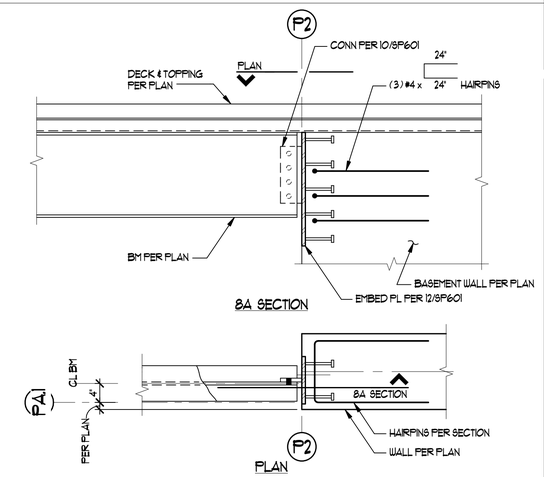

BEAM CONNECTION AT GRID PA 8
3/4" = 1'-0"

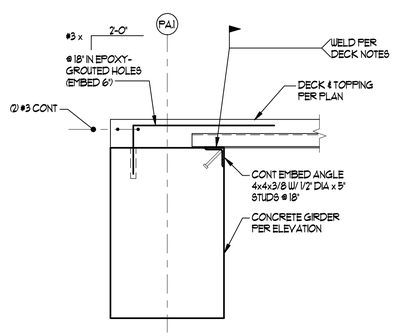

P3-P4 SKYBRIDGE DECK CONN TO CONC 9
3/4" = 1'-0"

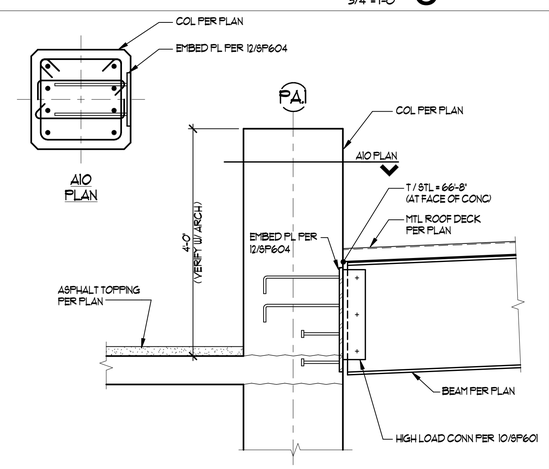

WF BEAM TO GRIDER CONN AT COLUMN 10
3/4" = 1'-0"

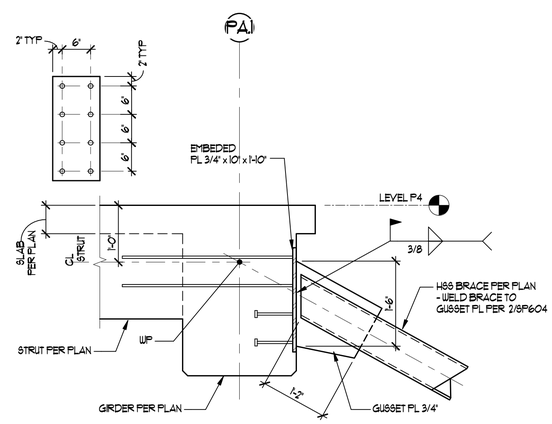

HSS BRACE TO CONC GIRDER CONN 11
3/4" = 1'-0"

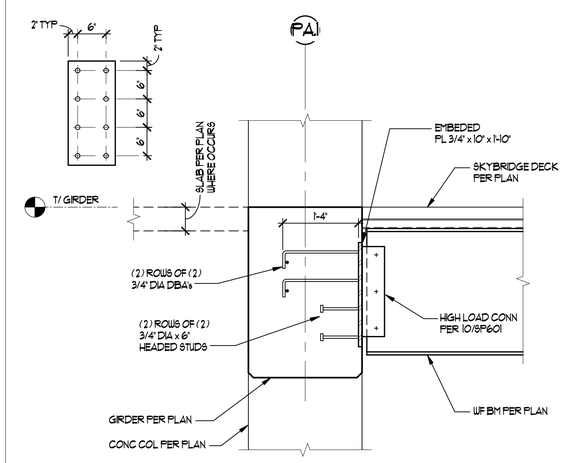

WF BEAM TO GRIDER CONN AT SKYBRIDGE 12
3/4" = 1'-0"

RECORD DRAWINGS

RECORD DRAWING

THESE RECORD DRAWINGS HAVE BEEN PREPARED FROM CONTRACTOR FURNISHED INFORMATION. THERE IS NO GUARANTEE AS TO THE ACCURACY OR COMPLETENESS OF THE INFORMATION CONTAINED HEREIN. RMI WAS NOT RETAINED TO VERIFY THE FIELD CONDITIONS.

COURTNEY WILLOUGHBY
DATE: 12/24/18
REID MIDDLETON INC.

KUMIN
ARCHITECTURE INTERIORS PLANNING
1901 STEELE STREET, STE 200 ANCHORAGE, AK 99503
907.272.5551 907.272.5561

NEESER CONSTRUCTION, INC.
Reid Middleton
4300 B St., Suite 302 Anchorage, AK 99503
Phone: 907.562.3439 - www.reidmiddleton.com
Corporate License #AECC598

© Copyright Reid Middleton, Inc. 2017

Childrens Dental Clinic Building

4441 Diplomacy Drive, Anchorage AK 99508
Southcentral Foundation

No.	Description	Date

Drawn By: RLC
Checked By: SES
Date: 24 DEC 2018
Phase: RECORD DRAWINGS
Job No: 402016.015
SHEET TITLE: STEEL DETAILS
SHEET NO: SP604

C:\Users\plaginski\Documents\SCI\ CDC Garage_Structural RECORD DWGS_2018_plaginski.rvt
12/21/2018 3:47:37 PM

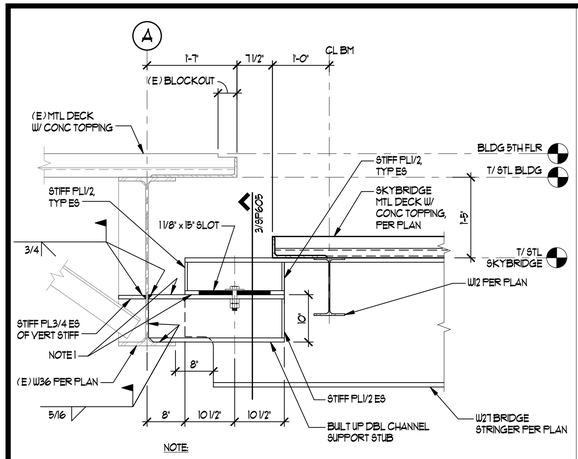

NOTE:

1. APPLY TEFLON TAPE TO SLIP JOINT CONTACT SURFACE.

SKYBRIDGE TO BLDG CONNECTION - 5TH FLOOR 1

3/4" = 1'-0"

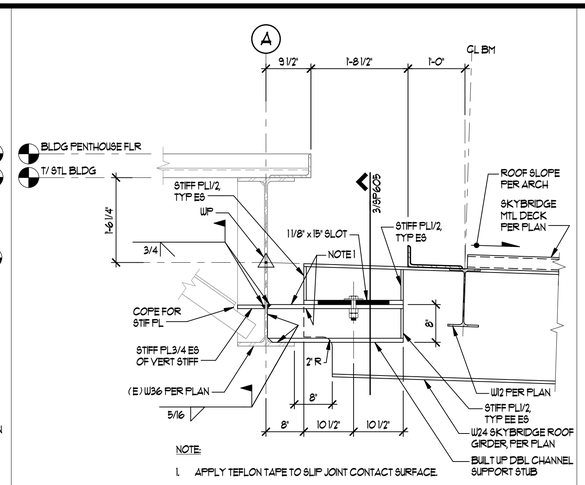

NOTE:

1. APPLY TEFLON TAPE TO SLIP JOINT CONTACT SURFACE.

SKYBRIDGE TO BLDG CONNECTION - PENTHOUSE FLOOR 2

3/4" = 1'-0"

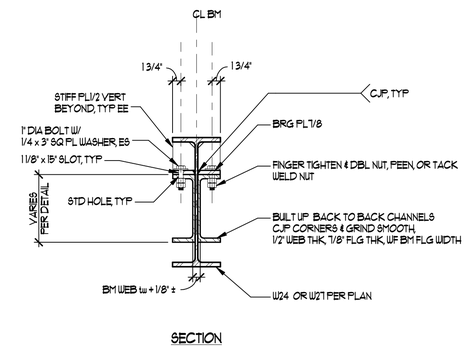

SECTION

SECTION - SKYBRIDGE CONNECTION AT DBL CHANNEL 3

3/4" = 1'-0"

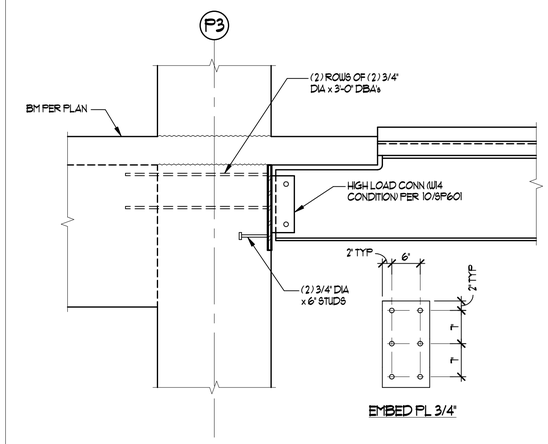

W18 BEAM TO CONC COLUMN CONN 4

3/4" = 1'-0"

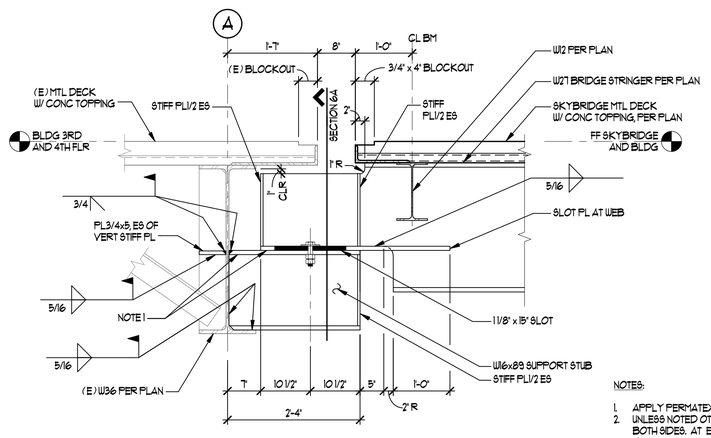

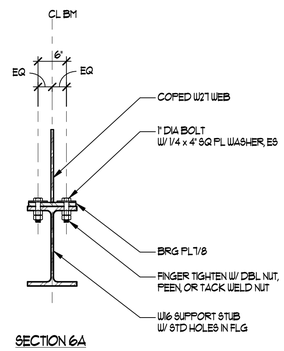

SECTION 6A

NOTES:

1. APPLY PERMATEX 800TB TO SLIP JOINT CONTACT SURFACE.
2. UNLESS NOTED OTHERWISE, STIFFENER PLATES SHALL BE WELDED TO MEMBERS WITH 5/16" FILLETS BOTH SIDES. AT END-OF-BEAM STIFFENERS, PROVIDE 5/16" FILLETS AT INSIDE FACE, AND 5/16" BEVEL WELDS AT EXTERIOR FACE FOR FLUSH FIT. WELDS APPLY TO WEBS AND FLANGES AS APPLICABLE.

SKYBRIDGE TO BLDG CONN - 3RD AND 4TH FLOORS 6

3/4" = 1'-0"

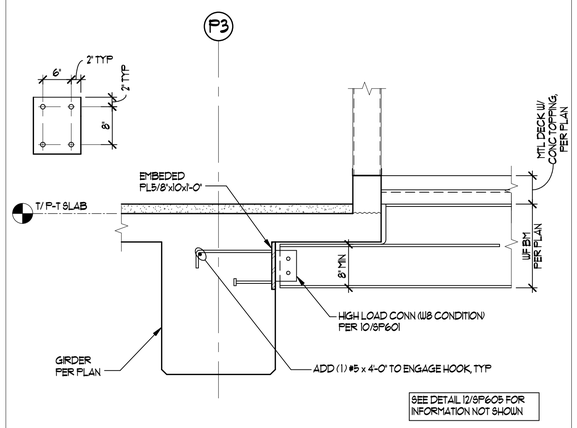

SEE DETAIL 12/SP605 FOR INFORMATION NOT SHOWN

W18 ELEV SHAFT BEAM - AT PAVING 7

3/4" = 1'-0"

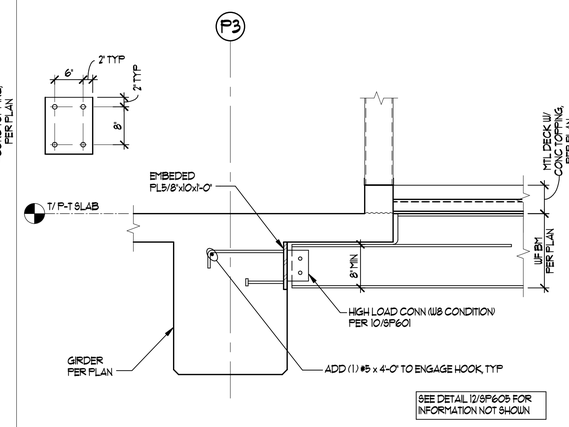

SEE DETAIL 12/SP605 FOR INFORMATION NOT SHOWN

W16 ELEV SHAFT BEAM - FLOOR 8

3/4" = 1'-0"

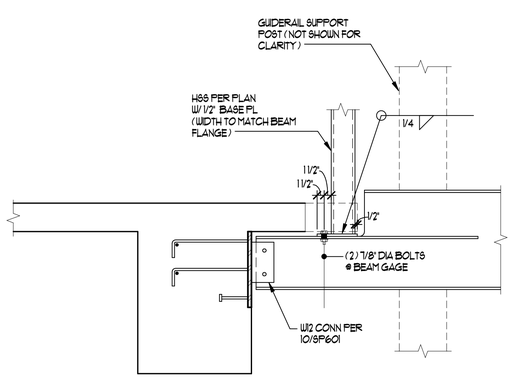

SEE DETAIL 12/SP605 FOR INFORMATION NOT SHOWN

LEVEL P7 TRANSFER BEAM CONN 9

NTS

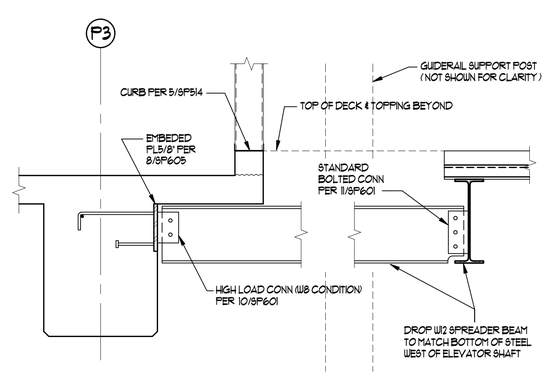

W12 SPREADER BEAM CONN 10

3/4" = 1'-0"

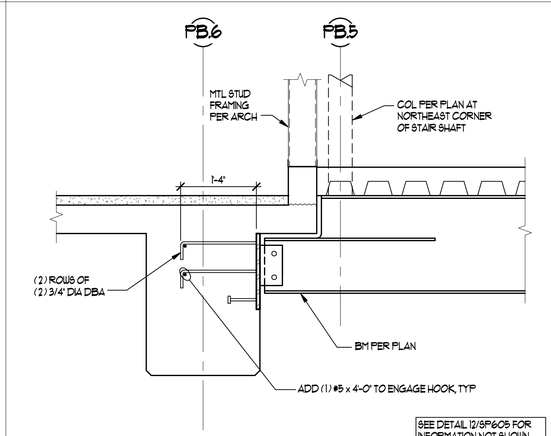

SEE DETAIL 12/SP605 FOR INFORMATION NOT SHOWN

W21 BEAM TO P-T BEAM CONN AT PAVING 11

3/4" = 1'-0"

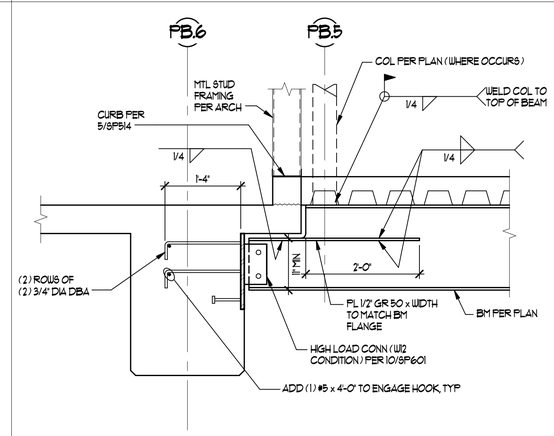

W18 BEAM TO P-T BEAM CONN 12

3/4" = 1'-0"

RECORD DRAWINGS

RECORD DRAWING

THESE RECORD DRAWINGS HAVE BEEN PREPARED FROM CONTRACTOR FURNISHED INFORMATION. THERE IS NO GUARANTEE AS TO THE ACCURACY OR COMPLETENESS OF THE INFORMATION CONTAINED HEREIN. RMI WAS NOT RETAINED TO VERIFY THE FIELD CONDITIONS.

COURTNEY WILLOUGHBY
DATE: 12/24/18
REID MIDDLETON INC.

KUMIN
ARCHITECTURE INTERIORS PLANNING
1901 STEELE STREET, SUITE 200 ANCHORAGE, ALASKA 99503
T 907.272.5313 F 907.272.5314

NEESER CONSTRUCTION, INC.
Reid Middleton
4300 B St., Suite 302 Anchorage, AK 99503
Phone: 907 562-3439 - www.reidmiddleton.com
Corporate License #AECC598

© Copyright Reid Middleton, Inc. 2017

Childrens Dental Clinic Building

4441 Diplomacy Drive, Anchorage AK 99508
Southcentral Foundation

No.	Description	Date

Drawn By: RLC
Checked By: SES
Date: 24 DEC 2018
Phase: RECORD DRAWINGS
Job No: 402016.015
SHEET TITLE: STEEL DETAILS
SHEET NO: SP605

C:\Users\plangner\AppData\Local\Temp\AcPublish_2016\402016.015 - Childrens Dental Clinic\Drawings\Structural\SP605.dwg, 12/27/2018 3:47:49 PM

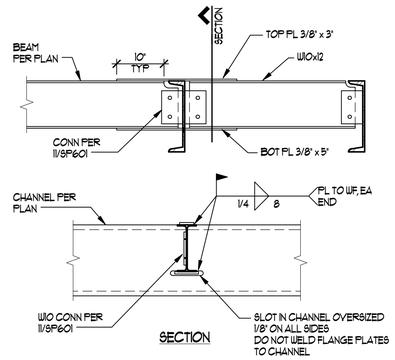

MOMENT CONNECTION W10 2
3/4" = 1'-0"

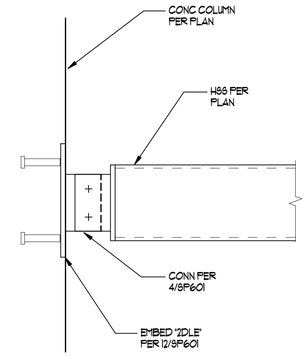

SNOW CHUTE CONN TO CONC 3
1 1/2" = 1'-0"

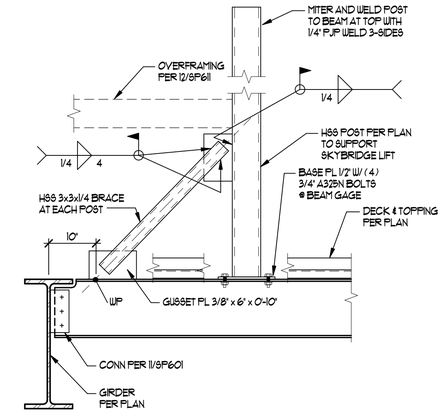

SKYBRIDGE LIFT SUPPORTS 4
3/4" = 1'-0"

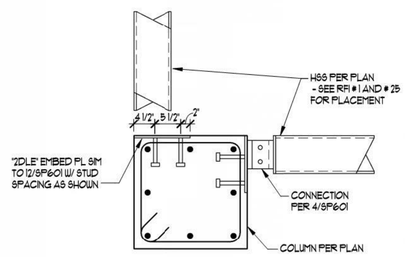

SNOW CHUTE COL CONN 7
NTS

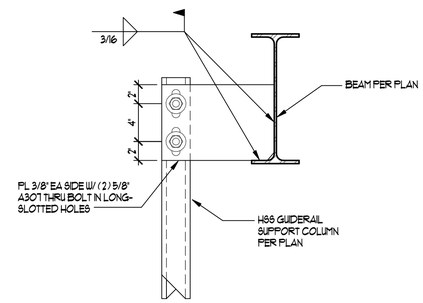

ROOF CONDITION AT OFFSET BEAM

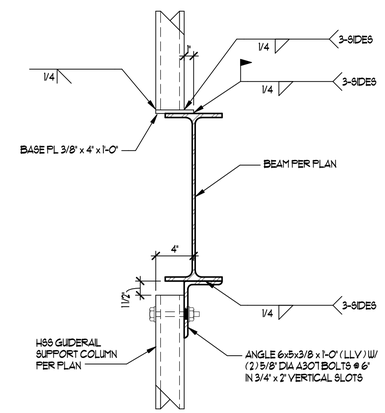

ELEVATOR GUIDERAIL POST CONN 8
1 1/2" = 1'-0"

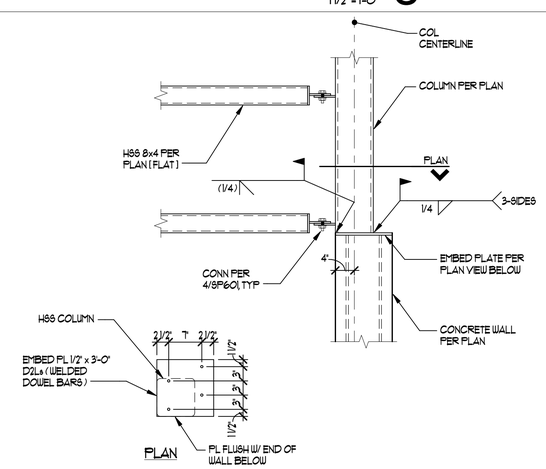

SNOW CHUTE COLUMN EMBED 12
3/4" = 1'-0"

RECORD DRAWINGS

RECORD DRAWING

THESE RECORD DRAWINGS HAVE BEEN PREPARED FROM CONTRACTOR FURNISHED INFORMATION. THERE IS NO GUARANTEE AS TO THE ACCURACY OR COMPLETENESS OF THE INFORMATION CONTAINED HEREIN. RMI WAS NOT RETAINED TO VERIFY THE FIELD CONDITIONS.

COURTNEY WILLOUGHBY
DATE: 12/24/18
REID MIDDLETON INC.

KUMIN
ARCHITECTURE INTERIORS PLANNING
1901 STEELE ST. SUITE 200 ANCHORAGE, AK 99503
907.272.5363 KUMIN@GCI.COM

NEESER CONSTRUCTION, INC.
Reid Middleton
4300 B St., Suite 302 Anchorage, AK 99503
Phone: 907.562.3439 - www.reidmiddleton.com
Corporate License #AECC598
© Copyright Reid Middleton, Inc. 2017

Childrens Dental Clinic Building

4441 Diplomacy Drive, Anchorage AK 99508
Southcentral Foundation

No.	Description	Date

Drawn By: RLC
Checked By: SES
Date: 24 DEC 2018
Phase: RECORD DRAWINGS
Job No: 402016.015
SHEET TITLE: MISC STEEL DETAILS
SHEET NO: SP606

C:\Users\glangnek\Documents\SCF CDC Garage_Structural RECORD DWGS_2015_glangnek.rvt
12/21/2018 3:47:41 PM

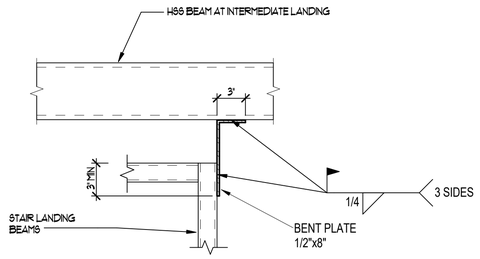

LANDING BEAM TO HSS NTS 2

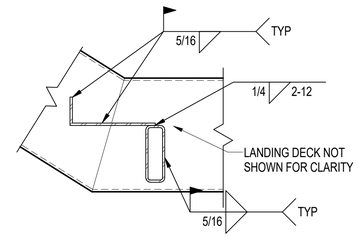

HSS STAIR HEADER TO OUTSIDE STRINGER NTS 3

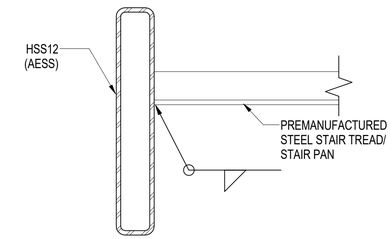

STAIR TREADS TO STRINGER NTS 4

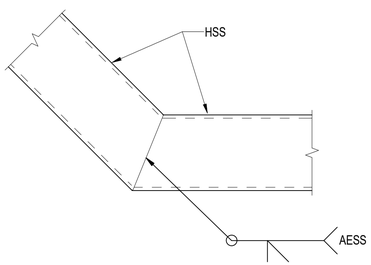

HSS STRINGERS MITER NTS 5

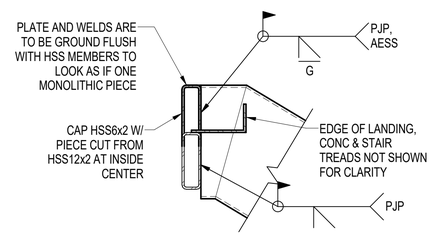

INSIDE CORNER OF STAIR LANDING, STRINGER NTS 6

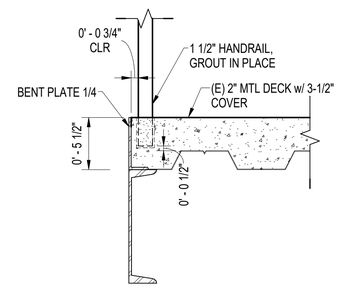

RAILING AT EDGE OF DECK NTS 7

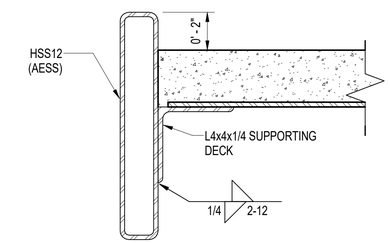

STAIR LANDING TO STRINGER NTS 8

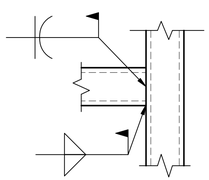

"T" INTERSECTION

STAIR OUTSIDE CORNER NTS 9

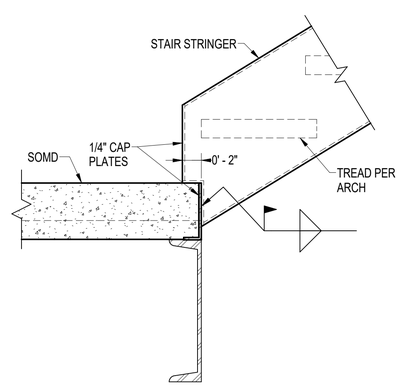

TYP HSS STRINGER ABV TO FLOOR NTS 10

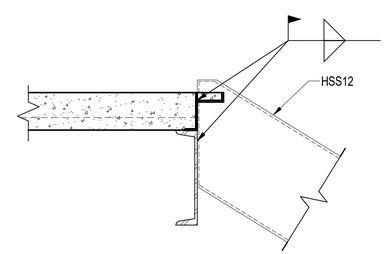

HSS STRINGER TO UPPER FLOOR NTS 11

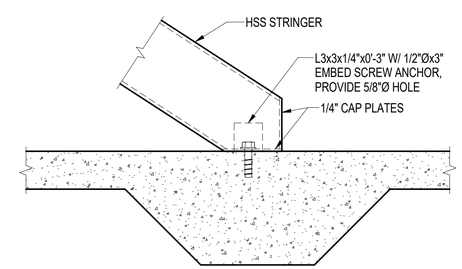

TUBE STEEL STRINGER BASE CONN NTS 12

RECORD DRAWINGS

RECORD DRAWING

THESE RECORD DRAWINGS HAVE BEEN PREPARED FROM CONTRACTOR FURNISHED INFORMATION. THERE IS NO GUARANTEE AS TO THE ACCURACY OR COMPLETENESS OF THE INFORMATION CONTAINED HEREIN. RMI WAS NOT RETAINED TO VERIFY THE FIELD CONDITIONS.

COURTNEY WILLOUGHBY
DATE: 12/24/18
REID MIDDLETON INC.

KUMIN
ARCHITECTURE INTERIORS PLANNING
1901 STORES BLVD. STE.200 ANCHORAGE, AK 99501
907.272.5363 KUMIN.COM

NEESER CONSTRUCTION, INC.

Reid Middleton
4300 B St., Suite 302 Anchorage, AK 99503
Phone: 907.562.3439 - www.reidmiddleton.com
Corporate License #AECC598

© Copyright Reid Middleton, Inc. 2017

Childrens Dental Clinic Building

4441 Diplomacy Drive, Anchorage AK 99508

Southcentral Foundation

No.	Description	Date

Drawn By: RLC
Checked By: SES
Date: 24 DEC 2018
Phase: RECORD DRAWINGS
Job No: 402016.015
SHEET TITLE: STAIR FRAMING DETAILS
SHEET NO: SP607

C:\Users\glangnak\Documents\SCF CDC Garage_Structural\RECORD DWGS_2015_glangnak.rvt

12/21/2018 3:47:42 PM

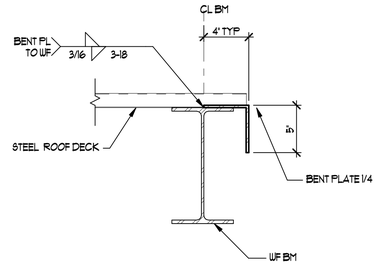

ROOF EDGE DETAIL 2
NTS

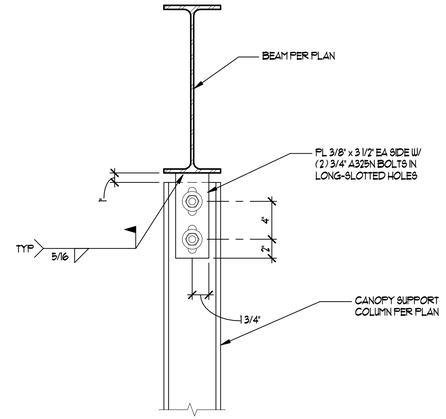

CANOPY WF POST TOP SUPPORT 3
NTS

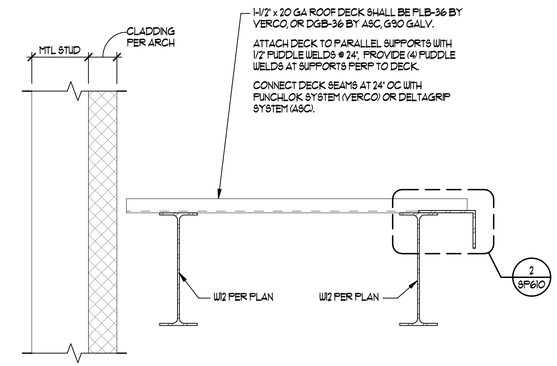

CANOPY SECTION 4
NTS

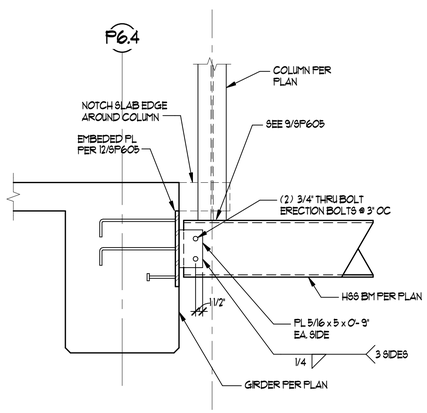

PENTHOUSE COLUMN TO HSS CONNECTION 5
3/4" = 1'-0"

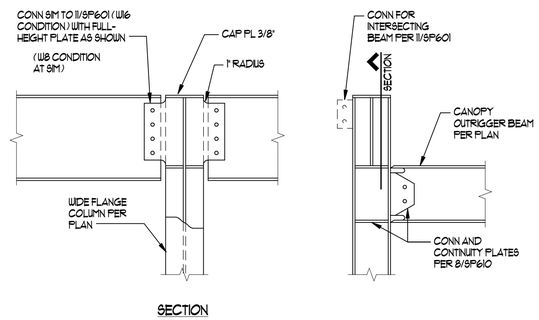

CANOPY BEAM CONNECTION 6
3/4" = 1'-0"

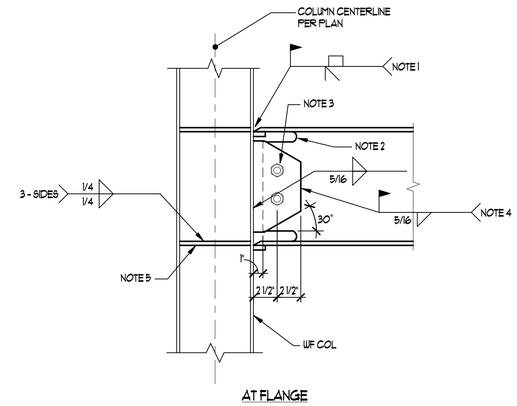

CANOPY WELDED MOMENT CONNECTION 8
NTS

NOTES:

1. CJP GROOVE WELD AT BOTH FLANGES.
2. WELD ACCESS HOLE, CONFORM TO AWS D1.8 SECTIONS 6.9.1.2 AND 6.9.2.
3. (2) 3/4" DIA A325 ERECTION BOLTS IN STD HOLES.
4. SHEAR PLATE 9/16" TO BEAM WEB FILLET WELD, 3 SIDES. TERMINATE WELD BETWEEN 1/2" AND 1" FROM THE EDGE OF THE WELD ACCESS HOLE.
5. PL 3/8" GRADE 50 CONTINUITY PLATES, TYP
6. DENOTED AS ⊢⊣ ⊢—— ON PLANS
7. AT COP OF COLUMN, USE COL CAP PLATE IN LIEU OF TOP STIFF PLATES.

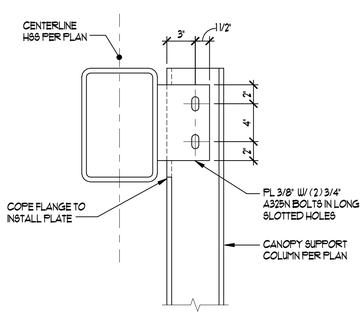

CANOPY COLUMN CONNECTION 10
1 1/2" = 1'-0"

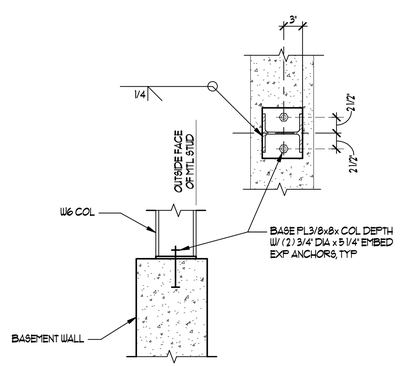

CANOPY WF POST BASE 11
NTS

RECORD DRAWINGS

RECORD DRAWING

THESE RECORD DRAWINGS HAVE BEEN PREPARED FROM CONTRACTOR FURNISHED INFORMATION. THERE IS NO GUARANTEE AS TO THE ACCURACY OR COMPLETENESS OF THE INFORMATION CONTAINED HEREIN. RMI WAS NOT RETAINED TO VERIFY THE FIELD CONDITIONS.

COURTNEY WILLOUGHBY
DATE: 12/24/18
REID MIDDLETON INC.

KUMIN
ARCHITECTURE INTERIORS PLANNING
1901 STEELE STREET, SUITE 200 ANCHORAGE, ALASKA 99503
907.272.5383 907.272.5384

NEESER CONSTRUCTION, INC.
Reid Middleton
4300 B St., Suite 302 Anchorage, AK 99503
Phone: 907 562-3439 - www.reidmiddleton.com
Corporate License #AECC598

© Copyright Reid Middleton, Inc. 2017

Childrens Dental Clinic Building

4441 Diplomacy Drive, Anchorage AK 99508
Southcentral Foundation

No.	Description	Date

Drawn By: RLC
Checked By: SES
Date: 24 DEC 2018
Phase: RECORD DRAWINGS
Job No: 402016.015
SHEET TITLE: CANOPY FRAMING DETAILS
SHEET NO: SP610

C:\Users\glaugman\Documents\SCP CDC Garage_Structural RECORD DWGS_2015_glaugman.rvt
12/21/2018 3:47:43 PM

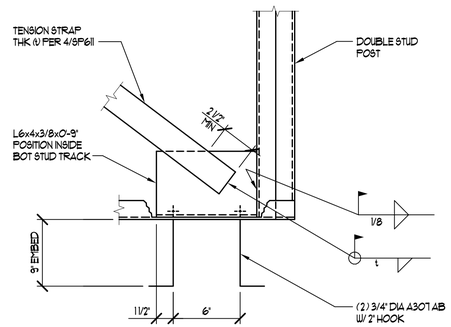

STRAP CONNECTION DETAIL 1
NTS

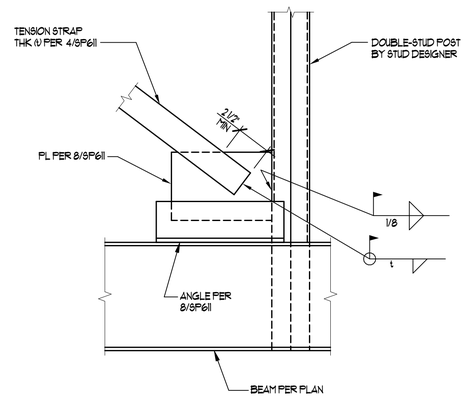

STRAP CONNECTION DETAIL 2
NTS

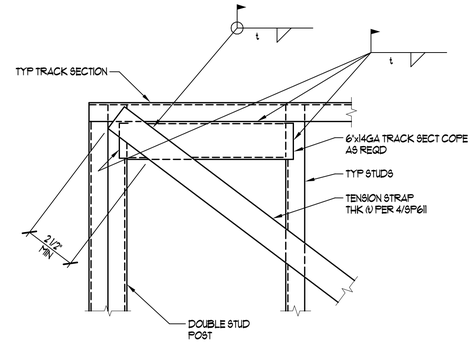

STRAP CONNECTION DETAIL 3
NTS

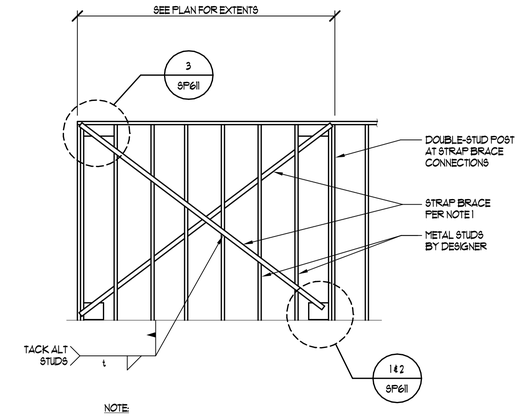

NOTE:

1. PROVIDE (2) 4"x14GA STRAPS AS SHOWN.
2. t = THICKNESS OF MEMBER TO BE WELDED.

STRAP BRACED WALL ELEVATION 4
NTS

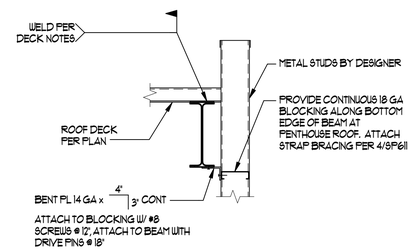

PENTHOUSE ROOF DECK DETAIL 7
NTS

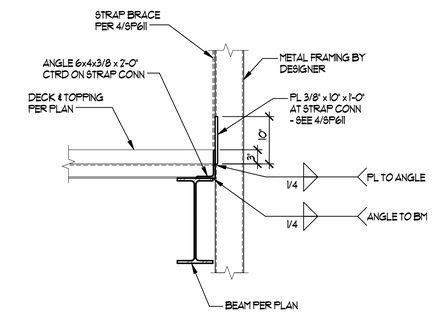

EXTERIOR WALL CONN AT PENTHOUSE 8
3/4" = 1'-0"

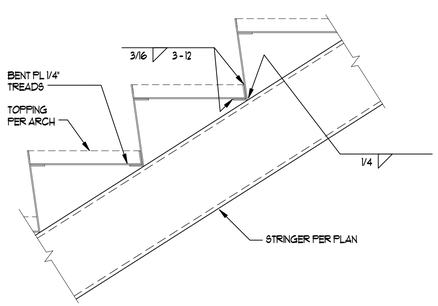

NOTE: SEE ARCH FOR TREAD & RISER DIMENSIONS AS WELL AS STAIR & LANDING EXTENTS

OVERFRAME TREAD RISER DETAIL 9
1 1/2" = 1'-0"

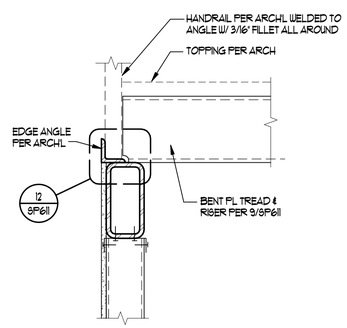

OVERFRAME STAIR 10
1 1/2" = 1'-0"

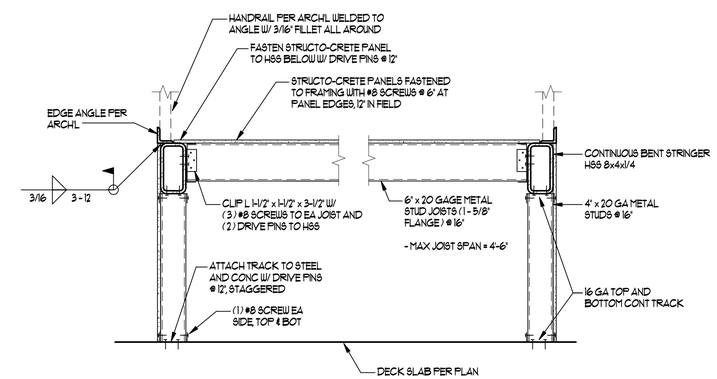

METAL OVERFRAMING DETAIL 12
NTS

RECORD DRAWINGS

RECORD DRAWING

THESE RECORD DRAWINGS HAVE BEEN PREPARED FROM CONTRACTOR FURNISHED INFORMATION. THERE IS NO GUARANTEE AS TO THE ACCURACY OR COMPLETENESS OF THE INFORMATION CONTAINED HEREIN. RMI WAS NOT RETAINED TO VERIFY THE FIELD CONDITIONS.

COURTNEY WILLOUGHBY
DATE: 12/24/18
REID MIDDLETON INC.

KUMIN
ARCHITECTURE INTERIORS PLANNING
1901 STORES BLVD. ANCHORAGE, AK 99501
907.272.5383 907.272.5387

NEESER CONSTRUCTION, INC.
Reid Middleton
4300 B St., Suite 302 Anchorage, AK 99503
Phone: 907.562.3439 - www.reidmiddleton.com
Corporate License #AECC598

© Copyright Reid Middleton, Inc. 2017

Childrens Dental Clinic Building

4441 Diplomacy Drive, Anchorage AK 99508
Southcentral Foundation

No.	Description	Date

Drawn By: RLC
Checked By: SES
Date: 24 DEC 2018
Phase: RECORD DRAWINGS
Job No: 402016.015
SHEET TITLE: METAL FRAMING DETAILS
SHEET NO: SP611

C:\Users\plogan\AppData\Local\Temp\AcPublish_2016\402016.015 - Childrens Dental Clinic\SP611.dwg
12/27/2018 3:47:46 PM

ABBREVIATIONS

@	AT	IN HG	INCHES MERCURY
&	AND	IN WC	INCHES WATER COLUMN
#	NUMBER	INSUL	INSULATION
%	PERCENT	IPS	INTERNATIONAL PIPE STANDARD
AD	ACCESS DOOR	K	THERMAL CONDUCTIVITY
AAP	AREA ALARM PANEL	KW	KILOWATT
ADA	AMERICANS WITH DISABILITIES ACT	KWH	KILOWATT HOUR
AFF	ABOVE FINISHED FLOOR	LAT	LEAVING AIR TEMPERATURE
AFG	ABOVE FINISHED GRADE	LB/HR	POUNDS PER HOUR
AHJ	AUTHORITY HAVING JURISDICTION	LBS	POUNDS
AHU	AIR-HANDLING UNIT	LF	LINEAR FEET
ALT	ALTERNATE	L	LENGTH
AMB	AMBIENT	LWT	LEAVING WATER TEMPERATURE
AMCA	AIR MOVEMENT AND CONTROL ASSOCIATION	LOC	LOCATION/LOCATED
ANSI	AMERICAN NATIONAL STANDARDS INSTITUTE	LO	LOCKED OPEN
APD	AIR PRESSURE DROP	LP	LOW PRESSURE
APPROX	APPROXIMATE	LR	LONG RADIUS
AR	ACID RESISTANT	LS	LOCKED SHUT
ARCH	ARCHITECTURAL	MAN	MANUAL
ASME	AMERICAN SOCIETY OF MECHANICAL ENGINEERS	MAT	MIXED AIR TEMPERATURE
ATM	ATMOSPHERE	MAV	MANUAL AIR VENT
AUTO	AUTOMATIC	MAX	MAXIMUM
AVG	AVERAGE	MBH	THOUSAND BTU PER HOUR
AWG	AMERICAN WIRE GAUGE	MECH	MECHANICAL
BAS	BUILDING AUTOMATION SYSTEM	MFR	MANUFACTURER
BDD	BACKDRAFT DAMPER	MIN	MINIMUM, MINUTE
BHP	BRAKE HORSEPOWER, BOILER HORSEPOWER	MPH	MILES PER HOUR
BLDG	BUILDING	MTD	MOUNTED
BLW	BELOW	N/A	NOT APPLICABLE
BOD	BOTTOM OF DUCT	NC	NOISE CRITERIA, NORMALLY CLOSED
BOP	BOTTOM OF PIPE	NFPA	NATIONAL FIRE PROTECTION AGENCY
BTU	BRITISH THERMAL UNIT	NIC	NOT IN CONTRACT
BTUH	BTU PER HOUR	NO	NORMALLY OPEN, NUMBER
C	COMMON, CONDENSATE	NTS	NOT TO SCALE
C-C	CENTER TO CENTER	OD	OUTSIDE DIAMETER
CAP	CAPACITY, END CAP	OFOI	OWNER FURNISHED, OWNER INSTALLED
CCW	COUNTER-CLOCKWISE	OSA	OUTSIDE AIR
CF	COOLING FAN, CIRCULATING FAN, CUBIC FOOT	OZ	OUNCE
CFM	CUBIC FEET PER MINUTE	PD	PRESSURE DROP OR DIFFERENCE
CI	CAST IRON	PG	PROPYLENE GLYCOL
CL	CENTER LINE	PLBG	PLUMBING
CLG	CEILING	POC	POINT OF CONNECTION
CMPR	COMPRESSOR	PNL	PANEL
COEF	COEFFICIENT	PH	PHASE (ELECTRICAL)
CONC	CONCRETE	PPM	PARTS PER MILLION
COND	CONDENSER	PSI	POUNDS PER SQUARE INCH
CTR	CENTER	PSIA	POUNDS PER SQUARE INCH - ABSOLUTE
CU	COPPER, CONDENSING UNIT	PSID	POUNDS PER SQUARE INCH - DIFFERENTIAL
CU IN	CUBIC INCH	PSIG	POUNDS PER SQUARE INCH - GAUGE
CV	VALVE FLOW COEFFICIENT	PRESS	PRESSURE
CW	CLOCKWISE	PRI	PRIMARY
DB	DECIBEL	R-407C,R-410A	REFRIGERANT (407C,410A,ETC.)
DBT	DRY-BULB TEMPERATURE	R/A	RETURN AIR
DDC	DIRECT DIGITAL CONTROL	RAD	RADIANT OR RADIATION
DEG OR °	DEGREE	RCVR	RECEIVER
DEG C	DEGREE CENTIGRADE	RECIRC	RECIRCULATE
DEG F	DEGREE FAHRENHEIT	RED	REDUCER
DEMO	DEMOLITION	REFRIG	REFRIGERATION
DENS	DENSITY	REV	REVOLUTIONS
DGM	DIAGRAM	RF	RELIEF FAN OR RETURN FAN
DI	DUCTILE IRON	RH	RELATIVE HUMIDITY
DIA OR Ø	DIAMETER	RM	ROOM
DIFF	DIFFERENCE OR DELTA	RPM	REVOLUTIONS PER MINUTE
DIP	DUCTILE IRON PIPE	RPS	REVOLUTIONS PER SECOND
DN	DOWN	S/A	SUPPLY AIR
DO	DITTO	SAT	SATURATION
DTL	DETAIL	SCHD	SCHEDULE
DWDI	DOUBLE WIDTH DOUBLE INLET	SCFM	STANDARD CUBIC FEET PER MINUTE
DWG	DRAWING	SD	STORM DRAIN
(E)	EXISTING	SEC	SECONDARY
EA	EACH	SF	SQUARE FEET
E/A	EXHAUST AIR	SH	SENSIBLE HEAT
EAT	ENTERING AIR TEMPERATURE	SHG	SENSIBLE HEAT GAIN
EF	EXHAUST FAN	SHR	SENSIBLE HEAT RATIO
EFF	EFFICIENCY	SHT	SHEET
EG	ETHYLENE GLYCOL, EXHAUST GRILLE	SHWR	SHOWER
ELEC	ELECTRICAL	SP	STATIC PRESSURE
ELEV	ELEVATION	SPD	STATIC PRESSURE DROP
EMB	EMBEDMENT	SPEC	SPECIFICATION, SPECIFIED
ENT	ENTERING	SPKLR	SPRINKLER
EQIV FT	EQUIVALENT FEET	SR	SHORT RADIUS
ESP	EXTERNAL STATIC PRESSURE	SWSI	SINGLE WIDTH SINGLE INLET
EVAP	EVAPORATOR	SQ	SQUARE
EXP	EXPANSION	SS	STAINLESS STEEL, SANITARY SEWER
EWT	ENTERING WATER TEMPERATURE	STD	STANDARD
°F	FAHRENHEIT	SUCT	SUCTION
FA	FACE AREA	TA	TRANSFER AIR
F-F	FACE TO FACE	TEMP	TEMPERATURE, TEMPORARY
FD	FIRE DAMPER	THRU	THROUGH
FLEX	FLEXIBLE	TOD	TOP OF DUCT
FLR	FLOOR	TONS	TONS OF REFRIGERATION
FOB	FLAT ON BOTTOM	TOP	TOP OF PIPE
FOT	FLAT ON TOP	TYP	TYPICAL
FP	FREEZING POINT	UG	UNDERGROUND
FPM	FEET PER MINUTE	UNO	UNLESS NOTED OTHERWISE
FPS	FEET PER SECOND	UPC	UNIFORM PLUMBING CODE
FSD	FIRE-SMOKE DAMPER	V	VOLTS OR VOLTAGE
FT	FOOT OR FEET	VAC	VACUUM
FV	FACE VELOCITY	VAC	VOLTS (ALTERNATING CURRENT)
GA	GAGE OR GAUGE	VAL	VALVE
GAL	GALLONS	VAP PR	VAPOR PRESSURE
GPD	GALLONS PER DAY	VAR	VARIABLE
GPH	GALLONS PER HOUR	VAV	VARIABLE AIR VOLUME
GPM	GALLONS PER MINUTE	VDC	VOLTS (DIRECT CURRENT)
GR	GRAINS	VEL	VELOCITY
GRD	GRILLES, REGISTERS, DIFFUSERS	VERT	VERTICAL
HD	HEAD	VFD	VARIABLE FREQUENCY DRIVE
HDPE	HIGH DENSITY POLYETHYLENE	VOL	VOLUME
HG	HEAT GAIN	VP	VELOCITY PRESSURE
HT	HEIGHT	VSD	VARIABLE SPEED DRIVE
HP	HORSEPOWER	VTR	VENT THROUGH ROOF
HR	HOUR(S)	W	WATT
HVAC	HEATING, VENTILATING & AIR-CONDITIONING	W/	WITH
HZ	FREQUENCY	W/O	WITHOUT
IAW	IN ACCORDANCE WITH	WB	WET BULB TEMPERATURE
ID	INSIDE DIAMETER	WC	WATER COLUMN
IE	INVERT ELEVATION	WH	WATT-HOUR
IBC	INTERNATIONAL BUILDING CODE	WP	WEATHER PROOF, WATER PROOF
IFC	INTERNATIONAL FIRE CODE	WPD	WATER PRESSURE DROP
IMC	INTERNATIONAL MECHANICAL CODE	WT	WEIGHT
IN	INCH	YD	YARD

GENERAL

SYMBOL	DESCRIPTION
1 / 2.	SHEET NOTE CONVENTION: REFERENCED SHEET NOTE; GENERAL SHEET NOTE
TRUE NORTH / PLAN NORTH	NORTH ARROW
1 / M0.1	DETAIL REFERENCE: DETAIL NUMBER; SHEET WHERE DETAIL APPEARS
A / M0.1	SECTION REFERENCE: SECTION LETTER; SHEET WHERE SECTION APPEARS
	POINT OF CONNECTION
P-#	PLUMBING FIXTURE NUMBER
ID / EQ#	EQUIPMENT SYMBOL: EQUIPMENT DESIGNATION; EQUIPMENT NUMBER
ID / CFM	AIR OUTLET SYMBOL: AIR OUTLET DESIGNATION; CFM
FT# / LF GPM	BASEBOARD FINTUBE DESIGNATION: FINTUBE DESIGNATION; GPM; LINEAR FEET OF FINTUBE ELEMENT
XXX	AIR TERMINAL UNIT TAG
	LINE CONVENTION: NEW OR REINSTALLED ITEM; ITEM TO BE DEMOLISHED; EXISTING ITEM TO REMAIN; EXISTING ITEM TO BE RELOCATED

VENTILATION

SYMBOL	ABBR.	DESCRIPTION
		DOUBLE LINE DUCTWORK
		SINGLE LINE DUCTWORK
		FLEX DUCTWORK
		SLOT GRILLES/REGISTERS/DIFFUSERS
	S/A	GRILLES/REGISTERS/DIFFUSERS - SUPPLY AIR
	R/A	GRILLES/REGISTERS/DIFFUSERS - RETURN AIR
	E/A	GRILLES/REGISTERS/DIFFUSERS - EXHAUST AIR
OR		AIR FLOW ARROW
VD	VD	AIR VOLUME DAMPER
FD	FD	FIRE DAMPER
SD	SD	SMOKE DAMPER
FSD	FSD	FIRE-SMOKE DAMPER
	AL	ACOUSTICAL DUCT LINING
		DUCT INSULATION
12		DUCT: ROUND
20X12		DUCT: RECTANGULAR FIRST FIGURE SIDE SHOWN
20X12 F.O.		DUCT: FLAT OVAL FIRST FIGURE SIDE SHOWN
M	MOD	MOTORIZED OPERATED DAMPER
	OBD	OPPOSED BLADE DAMPER
	PBD	PARALLEL BLADE DAMPER
	BDD	BACK DRAFT DAMPER
		DAMPER

SUPPLY	RETURN	EXHAUST	ROUND	
				DUCT TURNING UP OR TOWARD
SUPPLY	RETURN	EXHAUST	ROUND	DUCT TURNING DOWN OR AWAY

PLUMBING

SYMBOL	ABBR.	DESCRIPTION
	CW	COLD WATER
	HW	HOT WATER
	HWC	HOT WATER CIRCULATION
	V	VENT
	TP	TRAP PRIMER
	FM	FORCE MAIN, WASTE WATER
	W	WASTE WATER
	SD	STORM DRAIN
	RL, ORL	RAINLEADER, OVERFLOW RAINLEADER
	HB	HOSE BIB
	WHA	WATER HAMMER ARRESTER
A	PDI	PLUMBING AND DRAINAGE INSTITUTE WATER HAMMER ARRESTER SIZE A, B, C, D, OR E
TP		AUTOMATIC TRAP PRIMER VALVE
	FCO, YCO	FLOOR CLEANOUT, YARD CLEANOUT
	WCO	WALL CLEANOUT
	FD, FS	FLOOR DRAIN, FLOOR SINK
	RD, ORD	ROOF DRAIN, OVERFLOW ROOF DRAIN

PIPING

SYMBOL	ABBR.	DESCRIPTION
	HWS	HEATING WATER SUPPLY
	HWR	HEATING WATER RETURN
	GHS	HEATING GLYCOL SUPPLY
	GHR	HEATING GLYCOL RETURN
	RHS	RADIANT HEATING SUPPLY
	RHR	RADIANT HEATING RETURN
	CWS	COOLING WATER SUPPLY
	CWR	COOLING WATER RETURN
ENCLOSURE / FINTUBE ELEMENT	FT	BASEBOARD FINTUBE RADIATION
	UH	UNIT HEATER
OR	CUH	CABINET UNIT HEATER, HORIZONTAL OR VERTICAL

SPECIALTY PIPING

SYMBOL	ABBR.	DESCRIPTION
	RL	REFRIGERANT LIQUID
	RS	REFRIGERANT SUCTION

FUEL

SYMBOL	ABBR.	DESCRIPTION
	NG	NATURAL GAS

CONTROLS

SYMBOL	ABBR.	DESCRIPTION
T	TSTAT	THERMOSTAT
CO2		CARBON DIOXIDE DETECTOR
CO		CARBON MONOXIDE DETECTOR
		LOW VOLTAGE CONTROL
CS	CS	CURRENT SWITCH
CT	CT	CURRENT TRANSMITTER
FS	FS	FLOW SWITCH
TT	TT	TEMPERATURE TRANSMITTER
TIT	TIT	TEMPERATURE INDICATOR TRANSMITTER
PIT	PIT	PRESSURE INDICATOR TRANSMITTER
DPS	DPS	DIFFERENTIAL PRESSURE SWITCH
DPI	DPI	DIFFERENTIAL PRESSURE INDICATOR
PI OR	PI	PRESSURE INDICATOR, GAUGE
TI OR	TI	TEMPERATURE INDICATOR, THERMOMETER
FI	FI	FLOW INDICATOR

MEDICAL GAS PIPING

SYMBOL	ABBR.	DESCRIPTION
	CA	COMPRESSED AIR
	MV	MEDICAL VACUUM
	O2	MEDICAL OXYGEN
	N2O	MEDICAL NITROUS OXIDE

GENERAL PIPING

SYMBOL	ABBR.	DESCRIPTION
		BALL VALVE
	GV	GATE VALVE
		GLOBE VALVE
	BV	BUTTERFLY VALVE
	TDV	TRIPLE DUTY VALVE
	CV	CHECK VALVE
		BACKFLOW PREVENTER ASSEMBLY
	PRV	PRESSURE REDUCING VALVE
	PRV	PRESSURE REGULATOR VALVE
		PLUG VALVE
S	SOV	SOLENOID OPERATED VALVE
OR M	MOV	2 WAY MOTOR OPERATED VALVE
OR M	MOV	3 WAY MOTOR OPERATED VALVE
		2 WAY PNEUMATIC OPERATED VALVE
		3 WAY PNEUMATIC OPERATED VALVE
		BALANCING VALVE
	FCV	AUTOMATIC FLOW CONTROL VALVE
	SV	SAFETY VALVE, RELIEF VALVE
	VB	VACUUM BREAK
	AAV	AIR VENT, AUTO WITH ISOLATION VALVE
	MAV	AIR VENT, MANUAL
	PTTP	PRESSURE & TEMP TEST PLUG
		STRAINER W/ BLOWDOWN HOSE FITTING
		EQUIPMENT OR PIPE DRAIN VALVE W/HOSE FITTING
		EQUIPMENT OR PIPE DRAIN PLUG W/HOSE FITTING
		REDUCER (CONCENTRIC)
		REDUCER (ECCENTRIC)
		FLOW ARROW
		ANCHOR
		PIPE GUIDE
		PIPE SLEEVE
		PIPE UNION
		PIPE FLANGE
		FLEXIBLE CONNECTION
M		METER
		LINE BREAK
		END CAP
		PIPE UP / TEE UP
		PIPE DOWN (ELBOW)
		PIPE DOWN (TEE)

NOTE: THIS IS A STANDARD LEGEND, SOME OF THE SYMBOLS SHOWN ON LEGEND ARE NOT NECESSARILY ON THE DRAWINGS.

MECHANICAL DRAWING INDEX

MP001 LEGEND
MP002 MECHANICAL SCHEDULES
MP200 FLOOR PLAN - MECHANICAL - LEVEL P0
MP201 FLOOR PLAN - MECHANICAL - LEVEL P1
MP202 FLOOR PLAN - MECHANICAL - LEVEL P2
MP203 FLOOR PLAN - MECHANICAL - LEVEL P3
MP204 FLOOR PLAN - MECHANICAL - LEVEL P4
MP205 FLOOR PLAN - MECHANICAL - LEVEL P5
MP206 FLOOR PLAN - MECHANICAL - LEVEL P6
MP207 FLOOR PLAN - MECHANICAL - LEVEL P7
MP301 SKYBRIDGES - MECHANICAL
MP302 ENLARGED PLAN - LEVEL P0 - GENERATOR ROOM
MP401 DETAILS AND DIAGRAMS - MECHANICAL
MP402 DETAILS AND DIAGRAMS - MECHANICAL

THESE PROJECT RECORD DOCUMENTS HAVE BEEN MODIFIED TO INCLUDE FIELD MARKUPS PROVIDED BY THE CONTRACTOR. AMC ENGINEERS HAS NOT FIELD VERIFIED THIS INFORMATION AND DOES NOT CERTIFY THE COMPLETENESS AND/OR ACCURACY OF THESE DOCUMENTS.

BY: MDL

C 15334

KUMIN
ARCHITECTURE INTERIORS PLANNING
808 E STREET, STE 200 ANCHORAGE, AK 99501
T 907 272 8833

NEESER CONSTRUCTION, INC.

AMC ENGINEERS

Childrens Dental Clinic Building

4441 Diplomacy Drive, Anchorage AK 99508

Southcentral Foundation

No.	Description	Date

Drawn By: Author
Checked By: MDL
Date: 24 DEC 2018
Phase: RECORD DRAWINGS
Job No: 21519.00
SHEET TITLE: LEGEND
SHEET NO: MP001

PUMP SCHEDULE

SYMBOL	LOCATION	SERVICE	FLUID	TEMP. (DEG F)	GPM	HEAD (FT)	RPM	MOTOR (HP,V,PH)	OPER WT (LBS)	REMARKS, BASIS OF DESIGN
PMP-P1	ELEVATOR PIT	PIT DEWATER	WATER	65	100	35	-	2,208,3		ELEVATOR SUMP PUMP: 2" DISCHARGE CONNECTION, STAINLESS STEEL CONSTRUCTION WITH PUMP BAS, CONTROL PANEL, AND LEVEL SENSOR PROBES. STANCOR SE-200.

PLUMBING FIXTURE CONNECTION SCHEDULE

SYMBOL	FIXTURE	WASTE (INCH)	VENT (INCH)	HW (INCH)	CW (INCH)	REMARKS
FD-5	PARKING GARAGE FLOOR DRAIN	3	-	-	-	HEAVY DUTY, CAST IRON BODY WITH CLAMPING FLANGE, TWO STAGE DRAINAGE, AND HEAVY DUTY TRACTOR GRATE, SEDIMENT BUCKET, AND STAINLESS STEEL MESH BUCKET LINER.
FD-6	PARKING GARAGE FLOOR DRAIN	4	-	-	-	HEAVY DUTY, CAST IRON BODY WITH CLAMPING FLANGE, TWO STAGE DRAINAGE, AND HEAVY DUTY TRACTOR GRATE, SEDIMENT BUCKET, AND STAINLESS STEEL MESH BUCKET LINER.
HB-1	HOSE BIBB	-	-	-	3/4	FREEZE PROOF, AUTOMATIC DRAINING, INTEGRAL VACUUM BREAKER, FLUSH MOUNTED, KEY OPERATED DOOR, ANODIZED ALUMINUM FINISH.
HB-4	YARD HYDRANT	-	-	-	3/4	FREEZELESS "IOWA" YARD HYDRANT, WITH GALVANIZED STEEL PIPE CASING, BRASS MALE HOSE NOZZLE, ONE PIECE FLOW PLUNGER.
RD-1	ROOF DRAIN	AS NOTED	-	-	-	COATED CAST IRON BODY WITH COMBINED FLASHING CLAMP AND GRAVEL STOP, SUMP RECEIVER, UNDERDECK CLAMP, POLYETHYLENE DOME, AND DECK PLATE FOR BOTH PRIMARY AND OVERFLOW DRAINS.
RD-2	OVERFLOW ROOF DRAIN	AS NOTED	-	-	-	SIMILAR TO RD-1 WITH TWO INCH WATER DAM.

FAN SCHEDULE

SYMBOL	LOCATION	USE	SCFM	SP (IN WC)	FAN RPM	MOTOR (HP,V,PH)	WEIGHT (LBS)	REMARKS
CF-P1	SW STAIR TOWER LEVEL P7	SW STAIR TOWER COOLING	4,500	1.00	1348	2,460,3	185	INLINE EXHAUST FAN: BELT DRIVE, MOTOR ON SIZE OF UNIT, WITH INTEGRAL DUCT CONNECTION FLANGES. GREENHECK BSQ-180-20.
EF-P1	LEVEL P0	GENERAL EXHAUST	10,000	0.60	657	3,460,3	560	INLINE EXHAUST FAN: BELT DRIVE, MOTOR ON BOTTOM OF UNIT, WITH INTEGRAL DUCT CONNECTION FLANGES. GREENHECK BSQ-300-30.

LOUVER SCHEDULE

SYMBOL	UNIT AND USAGE	SCFM	SIZE (INCHES)	MIN. FREE AREA (SF)	MAX. FREE AREA VEL. (FPM)	MAX APD (IN WC)	REMARKS
LV-P1	LEVEL P1 STAIR TOWER INTAKE	4,500	60H X 30W	6.87	655	0.08	LOUVER: 6" THICK EXTRUDED ALUMINUM, 37 DEG. DRAINABLE BLADES WITH BIRD SCREEN, AMCA RATED FOR WATER AND AIR. GREENHECK ESD-635.
LV-P2	LEVEL P7 STAIR TOWER RELIEF	4,500	30H X 42W	4.47	1010	0.15	SAME AS LV-P1, EXCEPT SIZE.
LV-P3	GENSET INTAKE	1,800	72H X 72W	21.0	600	0.06	SAME AS LV-P1, EXCEPT SIZE.
LV-P4	GENSET EXHAUST	1,800	72H X 72W	21.0	600	0.05	SAME AS LV-P1, EXCEPT SIZE.
LV-P5	LEVEL P0 EXHAUST	10,000	34H X 144W	19.4	300	0.02	SAME AS LV-P1, EXCEPT SIZE.

AIR INLET/OUTLET SCHEDULE

SYMBOL	SCFM RANGE	MAX NC	MAX APD (IN WC)	ACTIVE FACE SIZE (INCHES)	DUCT SIZE (INCHES)	BASIS OF DESIGN	REMARKS
SG	200	21	0.05	48 LONG	8	TITUS ML-39 W/ MP-39	SUPPLY SLOT DIFFUSER WITH PLENUM: ALUMINUM, 1 INCH SLOTS, 2 SLOTS.
SN	160	-	0.05	12X6	12X6	TITUS 300RL	SUPPLY GRILLE: STEEL, AIRFOIL BLADES, 3/4" BLADE SPACING, DOUBLE DEFLECTION, DUCT MOUNTED.
EI	500 MAX	14	0.03	18X12	18X12	TITUS 30RL	HEAVY DUTY RETURN GRILLE: STEEL, OBD. SURFACE MOUNT BORDER, 0 DEG DEFLECTION.
EJ	1500 MAX	27	0.05	36X12	36X12	TITUS 30RL	SAME AS EI, EXCEPT SIZE.
EK	4500 MAX	22	0.04	30X54	30X54	TITUS 30RS	SAME AS EI, EXCEPT SIZE, AND BLADES PARALLEL TO SHORT DIRECTION, AND 2 SECTIONS.
EL	2300 MAX	17	0.02	48X24	48X24	TITUS 30RL	SAME AS EI, EXCEPT SIZE.

TERMINAL HEATING UNIT SCHEDULE

SYMBOL	LOCATION	MBH	FLUID	GPM	MAX WPD (FT)	FLUID TEMP IN/OUT (DEG F)	FAN MOTOR(S) (HP,V,PH)	OPER. WT (LBS)	REMARKS, BASIS OF DESIGN
CUH-P1	SW STAIR TOWER LEVEL 0	30.3	50/50 PG/WATER	4.0	0.3	150/130	1/15,120,1 1/30,120,1	155	RECESSED WALL-MOUNTED CABINET UNIT HEATER: STANDARD COIL, 3-SPEED FAN (810 CFM HIGH SPEED), INTEGRAL DISCHARGE AND INTAKE GRILLES, FLAT FILTER, KEYLOCK ACCESS DOORS, TAMPER PROOF FASTENERS, CEILING FRAME. RITTLING MODEL RFRWI-350, SIZE 08.
CUH-P2	SW STAIR TOWER LEVEL 1	30.3	50/50 PG/WATER	4.0	0.3	150/130	1/15,120,1 1/30,120,1	155	RECESSED WALL-MOUNTED CABINET UNIT HEATER: SAME AS CUH-P1.
CUH-P3	SW STAIR TOWER LEVEL 2	30.3	50/50 PG/WATER	4.0	0.3	150/130	1/15,120,1 1/30,120,1	155	RECESSED WALL-MOUNTED CABINET UNIT HEATER: SAME AS CUH-P1.
CUH-P4	SW STAIR TOWER LEVEL 3	30.3	50/50 PG/WATER	4.0	0.3	150/130	1/15,120,1 1/30,120,1	155	RECESSED WALL-MOUNTED CABINET UNIT HEATER: SAME AS CUH-P1.
CUH-P5	SW STAIR TOWER LEVEL 4	30.3	50/50 PG/WATER	4.0	0.3	150/130	1/15,120,1 1/30,120,1	155	RECESSED WALL-MOUNTED CABINET UNIT HEATER: SAME AS CUH-P1.
CUH-P6	SW STAIR TOWER LEVEL 5	30.3	50/50 PG/WATER	4.0	0.3	150/130	1/15,120,1 1/30,120,1	155	RECESSED WALL-MOUNTED CABINET UNIT HEATER: SAME AS CUH-P1.
CUH-P7	SW STAIR TOWER LEVEL 6	30.3	50/50 PG/WATER	4.0	0.3	150/130	1/15,120,1 1/30,120,1	155	RECESSED WALL-MOUNTED CABINET UNIT HEATER: SAME AS CUH-P1.
CUH-P8	SW STAIR TOWER LEVEL 7	44.2	50/50 PG/WATER	5.0	0.9	150/130	1/15,120,1 1/15,120,1	185	SEMI-RECESSED WALL-MOUNTED CABINET UNIT HEATER: 2-ROW COIL, 3-SPEED FAN (940 CFM HIGH SPEED),INTEGRAL DISCHARGE AND INTAKE GRILLES, FLAT FILTER, KEYLOCK ACCESS DOORS, TAMPER PROOF FASTENERS, PERMA-LAP FRAME. RECESS 4-1/2" MAX. RITTLING MODEL RFRWI-350-10, SIZE 10.
CUH-P9	SKYBRIDGE LEVEL 3 / P4	53.0	50/50 PG/WATER	5.0	1.1	150/130	1/15,120,1 1/15,120,1	215	SEMI-RECESSED WALL-MOUNTED CABINET UNIT HEATER: 2-ROW COIL, 3-SPEED FAN (1180 CFM HIGH SPEED),INTEGRAL DISCHARGE AND INTAKE GRILLES, FLAT FILTER, KEYLOCK ACCESS DOORS, TAMPER PROOF FASTENERS, PERMA-LAP FRAME. RECESS 4-1/2" MAX. RITTLING MODEL RRWI-330-12, SIZE 12.
CUH-P10	SKYBRIDGE LEVEL 4 / P5	53.0	50/50 PG/WATER	5.0	1.1	150/130	1/15,120,1 1/15,120,1	215	SEMI-RECESSED WALL-MOUNTED CABINET UNIT HEATER: SAME AS CUH-P9.
CUH-P11	SKYBRIDGE LEVEL 5 / P6	53.0	50/50 PG/WATER	5.0	1.1	150/130	1/15,120,1 1/15,120,1	215	SEMI-RECESSED WALL-MOUNTED CABINET UNIT HEATER: SAME AS CUH-P9.
UH-P1	LEVEL P0 STORAGE ROOM	50.1	50/50 PG/WATER	5.0	0.3	150/130	1/8,120,1	88	HORIZONTAL UNIT HEATER: 1550 CFM HIGH SPEED, AIR DEFLECTORS, SAFETY GUARD. RITTLING RH - 108.
UH-P2	LEVEL P0 GENERATOR ROOM	5.0	-	-	-	-	6.5,460,3	60	ELECTRIC HORIZONTAL UNIT HEATER: MODINE HER 50.
UH-P3	LEVEL P0 GEN. ELEC. ROOM	5.0	-	-	-	-	6.5,460,3	60	ELECTRIC HORIZONTAL UNIT HEATER: MODINE HER 50.
FT-1	SKYBRIDGE LEVEL 3 / P4 (FLOOR SOFFIT)	402 BTU/LF	50/50 PG/WATER	-	-	150/130	-	-	BARE FINNED TUBE: 3/4" COPPER TUBING, SINGLE TIER OF FINS, 2-3/4" X 4" ALUMINUM FINS, 32 FINS/FT. RITTLING 7 FT COPPER - ALUMINUM.

THESE PROJECT RECORD DOCUMENTS HAVE BEEN MODIFIED TO INCLUDE FIELD MARKUPS PROVIDED BY THE CONTRACTOR. AMC ENGINEERS HAS NOT FIELD VERIFIED THIS INFORMATION AND DOES NOT CERTIFY THE COMPLETENESS AND/OR ACCURACY OF THESE DOCUMENTS.

BY: MDL

© 15334

KUMIN
ARCHITECTURE INTERIORS PLANNING
9101 STREET, STE 200 ANCHORAGE, AK 99501
907 272-8663 907 272-8665

NEESE CONSTRUCTION, INC.

Adams, Morgenthaler & Co., Inc.
DBA AMC ENGINEERS
701 E. Tudor Rd. Suite 230
Anchorage, AK 99503
www.amc-engineers.com
AMC ENGINEERS

Childrens Dental Clinic Building

4441 Diplomacy Drive, Anchorage AK 99508

Southcentral Foundation

No.	Description	Date

Drawn By: Author
Checked By: MDL
Date: 24 DEC 2018
Phase: RECORD DRAWINGS
Job No: 21519.00
SHEET TITLE: MECHANICAL SCHEDULES
SHEET NO: MP002

C:\Users\ERP-AMC-ARCH\Documents\SCF CDCB - MEP_ERP.rvt
12/21/2018 2:17:57 PM

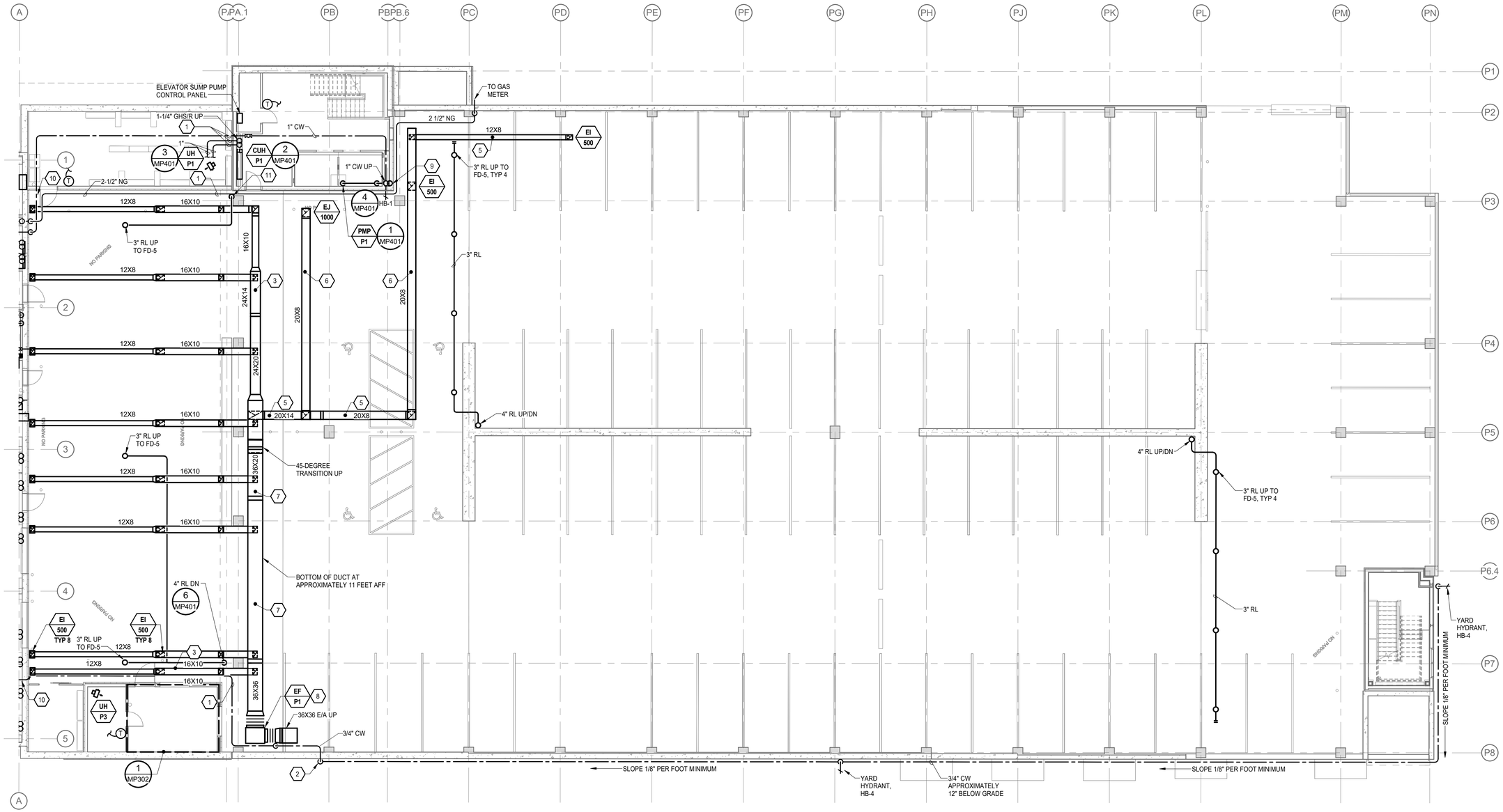

1 / MP200 FLOOR PLAN - MECHANICAL - LEVEL P0

Scale: 3/32" = 1'-0"

GENERAL NOTES

1. PROVIDE FAN FLEX TYPE CONNECTION ON E/A DUCTWORK WHERE DUCT CROSSES GRIDLINES PA/PA.1, TYPICAL 4.
2. PROVIDE BALANCING DAMPER AT EACH E/A INLET BRANCH DUCT.

SHEET NOTES (#)

1. PROVIDE METRAFLEX EXPANSION LOOP WHERE PIPE CROSSES GRIDLINES PA/PA.1.
2. 3/4" CW THROUGH EXTERIOR WALL TO SERVE EXTERIOR HOSE HYDRANTS.
3. ROUTE DUCT HIGH IN POCKET BETWEEN BEAMS, TIGHT TO DECK. COORDINATE WITH SPRINKLER PIPING.
4. COORDINATE DUCT AND SPRINKLER SEISMIC LOOP.
5. ROUTE DUCT TIGHT TO STRUCTURE.
6. ROUTE DUCT LOW IN POCKET BETWEEN BEAMS, BUT NOT BELOW BOTTOM OF BEAM. COORDINATE WITH SPRINKLER PIPING.
7. SUPPORT E/A DUCT FROM PARKING GARAGE WALL / STRUCTURE.
8. SUPPORT FAN FROM PARKING GARAGE WALL / STRUCTURE. PROVIDE FAN ISOLATORS.
9. 2" ELEVATOR PIT SUMP PUMP DISCHARGE PIPE.
10. ISOLATION VALVE AND LOW POINT DRAIN LOCATED IN MAIN BUILDING FOR PARKING GARAGE COLD WATER WINTER DRAIN-DOWN.
11. 3" RAIN LEADER DOWN, SEE DETAIL 6/MP401.

SCALE: 3/32" = 1' - 0"
0' 5'-4" 10'-8" 21'-4" 42'-8"

THESE PROJECT RECORD DOCUMENTS HAVE BEEN MODIFIED TO INCLUDE FIELD MARKUPS PROVIDED BY THE CONTRACTOR. AMC ENGINEERS HAS NOT FIELD VERIFIED THIS INFORMATION AND DOES NOT CERTIFY THE COMPLETENESS AND/OR ACCURACY OF THESE DOCUMENTS.

BY: MDL

© 15334

KUMIN
ARCHITECTURE INTERIORS PLANNING
9101 STREET, STE 200 ANCHORAGE, AK 99501
907 272 8663 FAX 907 272 8665

NEESE CONSTRUCTION, INC.
Adams, Morgenthaler & Co., Inc.
DBA AMC ENGINEERS
701 E. Tudor Rd. Suite 230
Anchorage, AK 99503
www.amc-engineers.com
ENGINEERS

Childrens Dental Clinic Building

4441 Diplomacy Drive, Anchorage AK 99508

Southcentral Foundation

No.	Description	Date

Drawn By: Author
Checked By: MDL
Date: 24 DEC 2018
Phase: RECORD DRAWINGS
Job No: 21519.00
SHEET TITLE: FLOOR PLAN - MECHANICAL - LEVEL P0
SHEET NO: MP200

C:\Users\BP AMC-ARCH\Documents\SCF CDCS - NEF_BRP.rvt
12/21/2018 2:18:01 PM

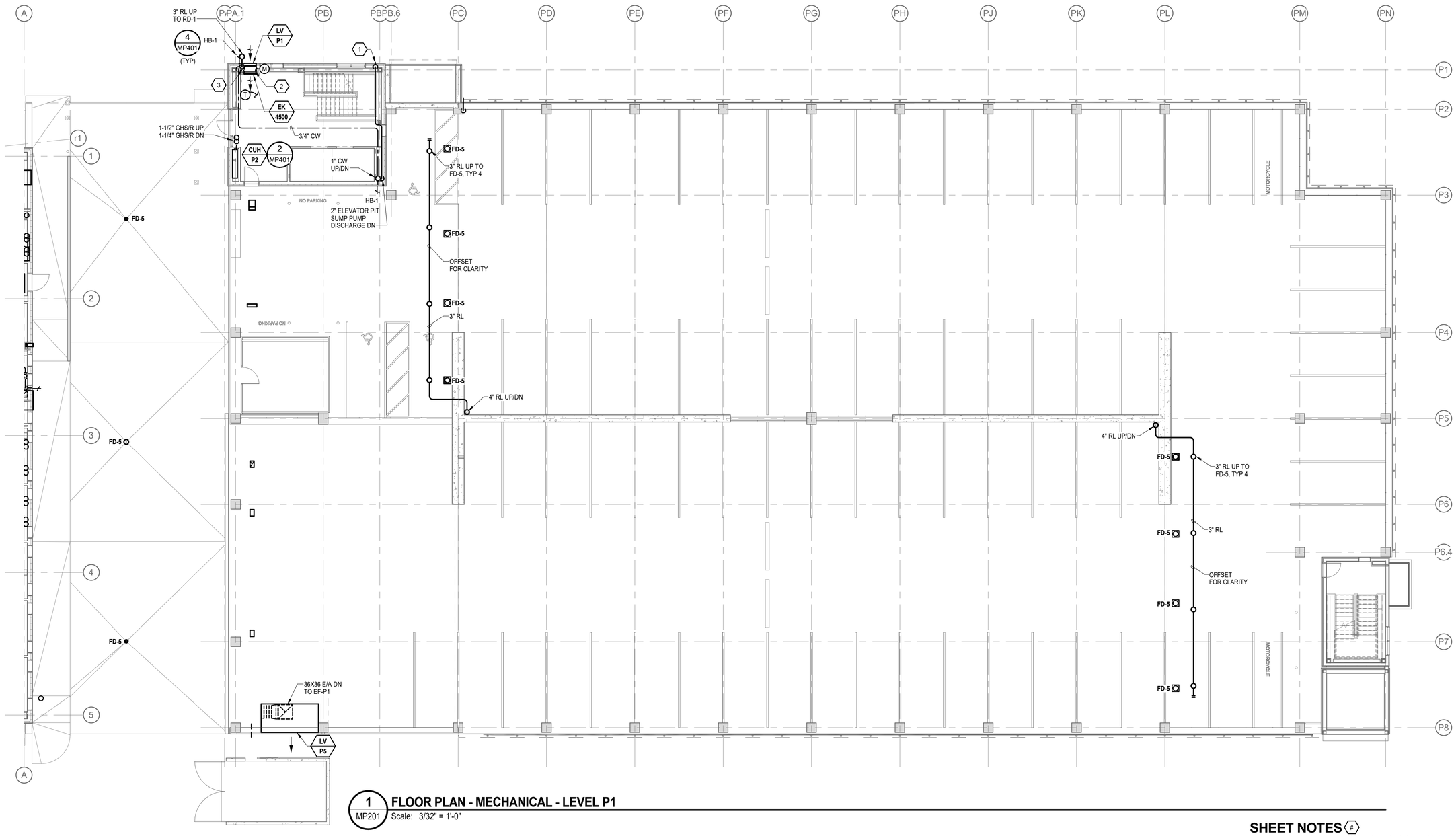

1 FLOOR PLAN - MECHANICAL - LEVEL P1

MP201 Scale: 3/32" = 1'-0"

SHEET NOTES

1. 2" ELEVATOR SUMP PUMP DISCHARGE PIPING TO BUILDING EXTERIOR. PROVIDE LINE SIZED CHECK VALVE. INSULATE PIPING FROM INSIDE OF EXTERIOR WALL TO 2 FEET UPSTREAM OF CHECK VALVE. TERMINATE DISCHARGE 24 INCHES ABOVE FINISHED GRADE WITH DOWNSPOUT NOZZLE. PROVIDE ENGRAVED SIGN PERMANANTLY AFFIXED TO BUILDING LABELED "ELEVATOR PIT DISCHARGE".
2. 2" FLAT FILTERS, 12X24, 7 PIECES; AND 12X12, 1 PIECE. FACE LOAD ARRANGEMENT.
3. 3" RL DOWN TO DOWNSPOUT, APPROXIMATELY 2 FEET AGL.

SCALE: 3/32" = 1' - 0"

0' 5'-4" 10'-8" 21'-4" 42'-8"

THESE PROJECT RECORD DOCUMENTS HAVE BEEN MODIFIED TO INCLUDE FIELD MARKUPS PROVIDED BY THE CONTRACTOR. AMC ENGINEERS HAS NOT FIELD VERIFIED THIS INFORMATION AND DOES NOT CERTIFY THE COMPLETENESS AND/OR ACCURACY OF THESE DOCUMENTS.

BY: MDL

© 15334

KUMIN
ARCHITECTURE INTERIORS PLANNING
9101 STREET, STE 200 ANCHORAGE, AK 99501
907 272 5863 907 272 5865

NEESE CONSTRUCTION, INC.

AMC ENGINEERS
Adams, Morgenthaler & Co., Inc.
Civil, Mechanical, Electrical
701 E. Tudor Rd. Suite 230
Anchorage, AK 99503
www.amc-engineers.com

Childrens Dental Clinic Building

4441 Diplomacy Drive, Anchorage AK 99508

Southcentral Foundation

No.	Description	Date

Drawn By: Author
Checked By: MDL
Date: 24 DEC 2018
Phase: RECORD DRAWINGS
Job No: 21519.00
SHEET TITLE: FLOOR PLAN - MECHANICAL - LEVEL P1

SHEET NO:

MP201

C:\Users\ERP AMC-ARCH\Documents\SCF CDCB - MEP_ERP.rvt

12/21/2019 2:18:04 PM

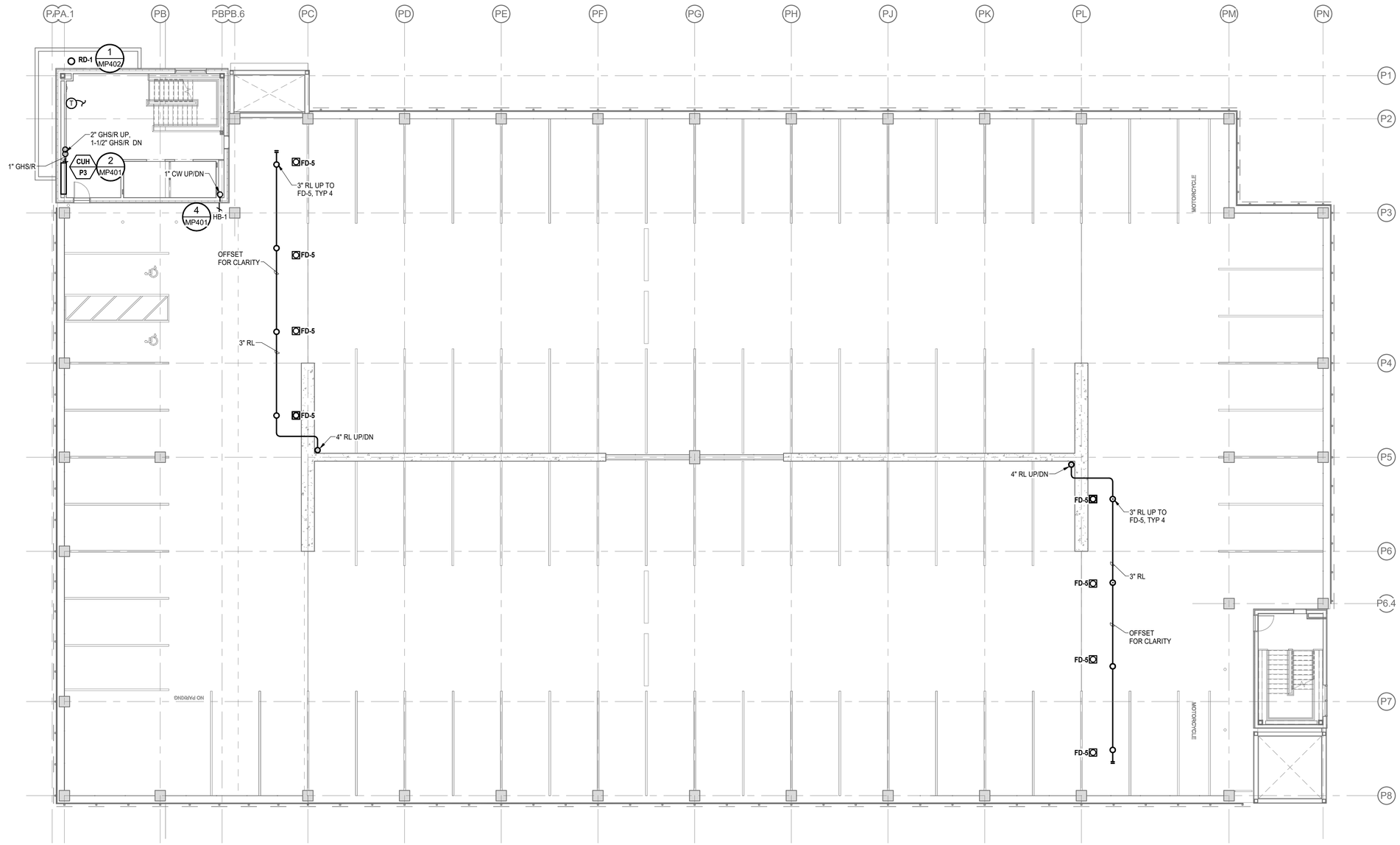

1 MP202 **FLOOR PLAN - MECHANICAL - LEVEL P2**

Scale: 3/32" = 1'-0"

SCALE: 3/32" = 1' - 0"

0' 5'-4" 10'-8" 21'-4" 42'-8"

THESE PROJECT RECORD DOCUMENTS HAVE BEEN MODIFIED TO INCLUDE FIELD MARKUPS PROVIDED BY THE CONTRACTOR. AMC ENGINEERS HAS NOT FIELD VERIFIED THIS INFORMATION AND DOES NOT CERTIFY THE COMPLETENESS AND/OR ACCURACY OF THESE DOCUMENTS.

BY: MDL

© 15334

KUMIN
ARCHITECTURE INTERIORS PLANNING
9101 STREET, STE 200 ANCHORAGE, AK 99501
907 272 8455 FAX 907 272 8482

NEESE CONSTRUCTION, INC.

Adams, Morgenthaler & Co., Inc.
Civil & Structural Engineers
701 E. Tudor Rd. Suite 230
Anchorage, AK 99503
www.amc-engineers.com
AMC ENGINEERS

Childrens Dental Clinic Building

4441 Diplomacy Drive, Anchorage AK 99508

Southcentral Foundation

No.	Description	Date

Drawn By: Author
Checked By: MDL
Date: 24 DEC 2018
Phase: RECORD DRAWINGS
Job No: 21519.00
SHEET TITLE: FLOOR PLAN - MECHANICAL - LEVEL P2
SHEET NO: MP202

C:\Users\ERP AMC-ARCH\Documents\SCF CDCB - MEP_ERP.rvt

1/22/2019 2:16:55 PM

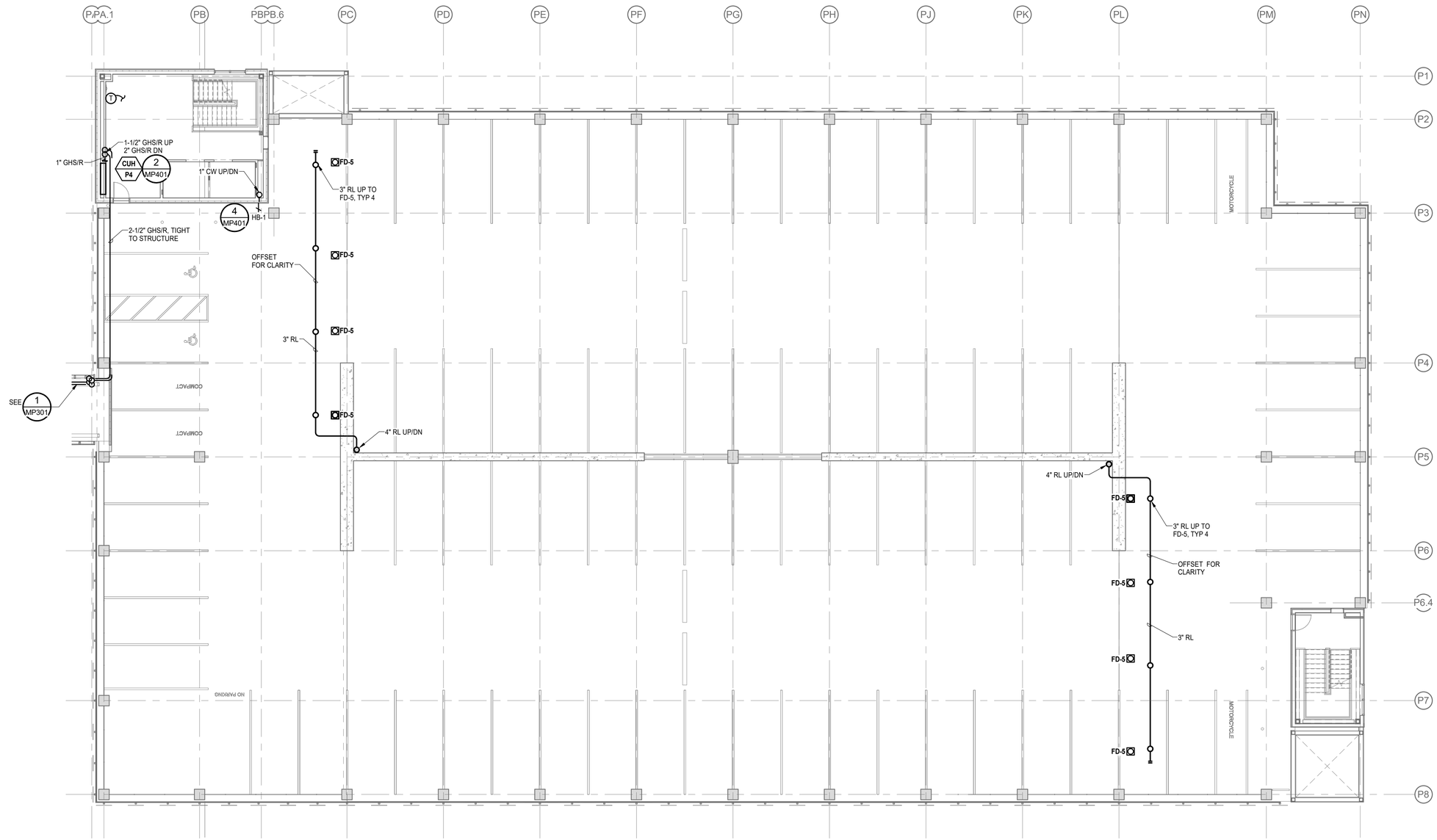

1 MP203 **FLOOR PLAN - MECHANICAL - LEVEL P3**

Scale: 3/32" = 1'-0"

SCALE: 3/32" = 1' - 0"

0' 5'-4" 10'-8" 21'-4" 42'-8"

THESE PROJECT RECORD DOCUMENTS HAVE BEEN MODIFIED TO INCLUDE FIELD MARKUPS PROVIDED BY THE CONTRACTOR. AMC ENGINEERS HAS NOT FIELD VERIFIED THIS INFORMATION AND DOES NOT CERTIFY THE COMPLETENESS AND/OR ACCURACY OF THESE DOCUMENTS.

BY: MDL

© 15334

KUMIN
ARCHITECTURE INTERIORS PLANNING
9101 STREET, STE 200 ANCHORAGE, AK 99501
907 272 8663 FAX 907 272 8665

NEESE CONSTRUCTION, INC.

Adams, Morgenthaler & Co., Inc.
Civil & Land Surveyors
701 E. Tudor Rd. Suite 230
Anchorage, AK 99503
www.amc-engineers.com

AMC ENGINEERS

Childrens Dental Clinic Building

4441 Diplomacy Drive, Anchorage AK 99508

Southcentral Foundation

No.	Description	Date

Drawn By: Author
Checked By: MDL
Date: 24 DEC 2018
Phase: RECORD DRAWINGS
Job No: 21519.00
SHEET TITLE: FLOOR PLAN - MECHANICAL - LEVEL P3
SHEET NO: MP203

C:\Users\ERP AMC-ARCH\Documents\SCF CDCB - MEP_ERP.rvt

1/22/2019 2:16:13 PM

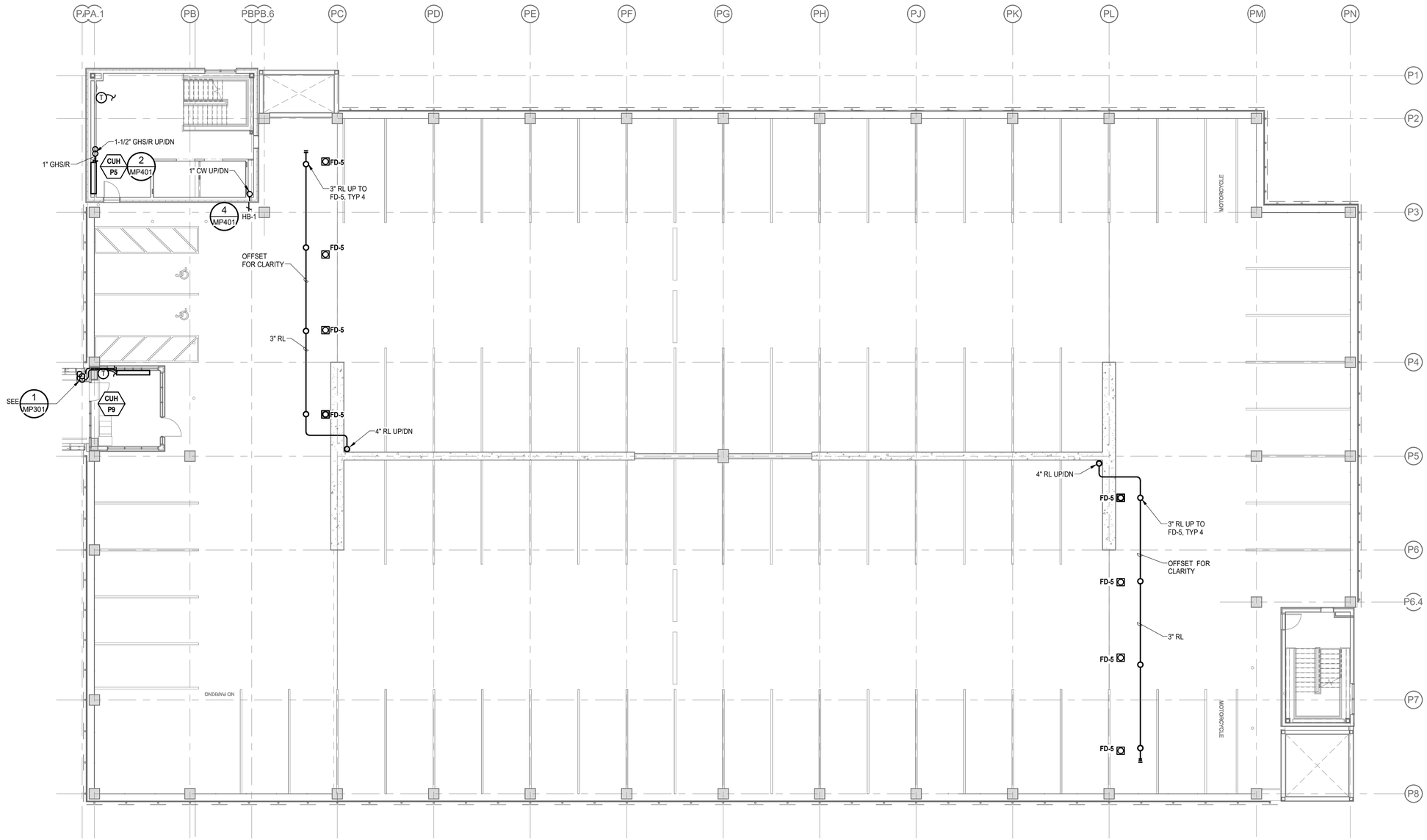

1 MP204 **FLOOR PLAN - MECHANICAL - LEVEL P4**

Scale: 3/32" = 1'-0"

SCALE: 3/32" = 1' - 0"

0' 5'-4" 10'-8" 21'-4" 42'-8"

THESE PROJECT RECORD DOCUMENTS HAVE BEEN MODIFIED TO INCLUDE FIELD MARKUPS PROVIDED BY THE CONTRACTOR. AMC ENGINEERS HAS NOT FIELD VERIFIED THIS INFORMATION AND DOES NOT CERTIFY THE COMPLETENESS AND/OR ACCURACY OF THESE DOCUMENTS.

BY: MDL

© 15334

KUMIN
ARCHITECTURE INTERIORS PLANNING
9101 STREET, STE 200 ANCHORAGE, AK 99501
907 272 8663 FAX: 907 272 8665

NEESE CONSTRUCTION, INC.

Adams, Morgenthaler & Co., Inc.
Civil & Land Surveyors
701 E. Tudor Rd. Suite 230
Anchorage, AK 99503
www.amc-engineers.com
ENGINEERS

Childrens Dental Clinic Building

4441 Diplomacy Drive, Anchorage AK 99508

Southcentral Foundation

No.	Description	Date

Drawn By: Author
Checked By: MDL
Date: 24 DEC 2018
Phase: RECORD DRAWINGS
Job No: 21519.00
SHEET TITLE: FLOOR PLAN - MECHANICAL - LEVEL P4

SHEET NO:

MP204

C:\Users\ERP AMC-ARCH\Documents\SCF CDCB - MEP_ERP.rvt

1/22/2019 2:16:17 PM

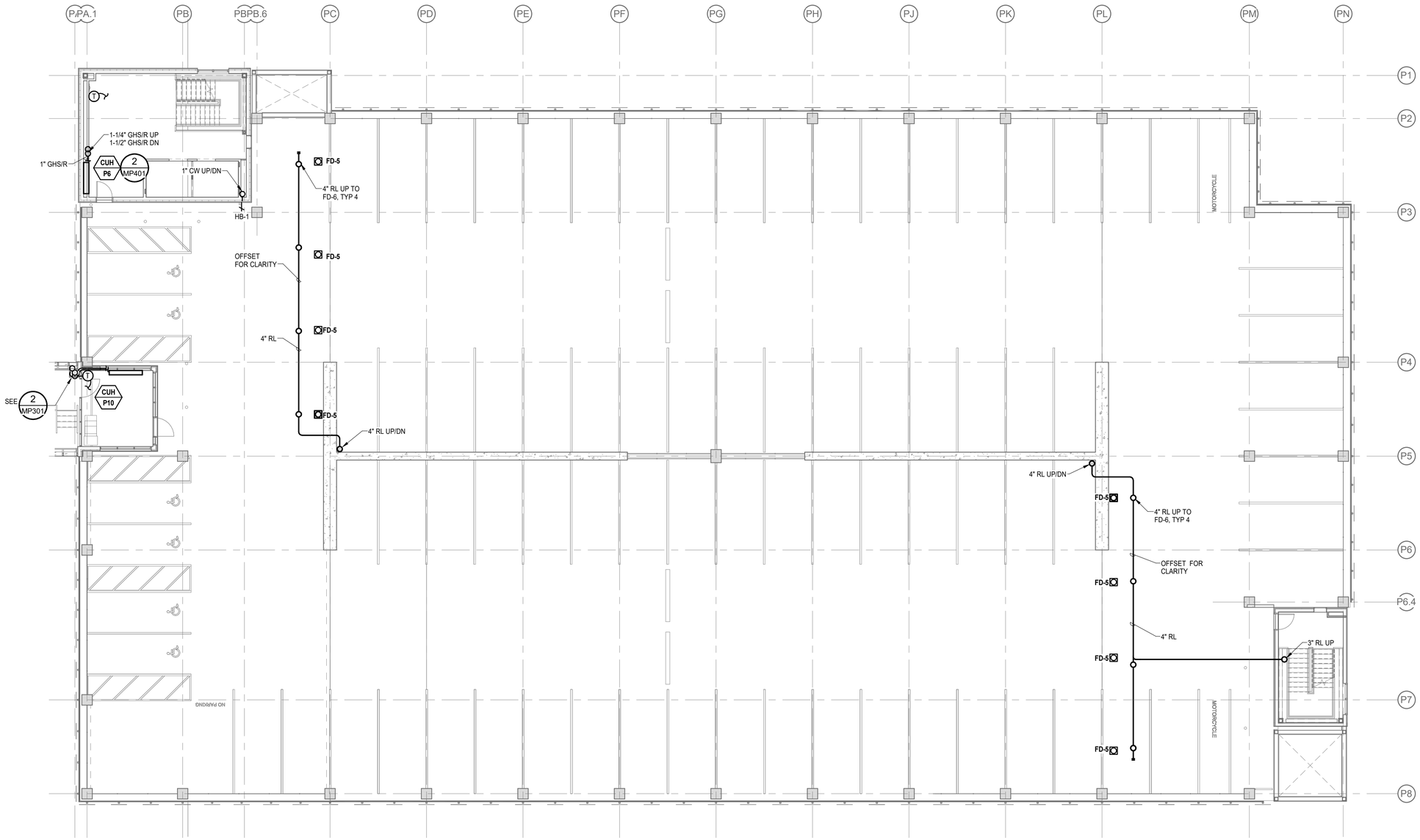

1 MP205 **FLOOR PLAN - MECHANICAL - LEVEL P5**

Scale: 3/32" = 1'-0"

SCALE: 3/32" = 1' - 0"

0' 5'-4" 10'-8" 21'-4" 42'-8"

THESE PROJECT RECORD DOCUMENTS HAVE BEEN MODIFIED TO INCLUDE FIELD MARKUPS PROVIDED BY THE CONTRACTOR. AMC ENGINEERS HAS NOT FIELD VERIFIED THIS INFORMATION AND DOES NOT CERTIFY THE COMPLETENESS AND/OR ACCURACY OF THESE DOCUMENTS.

BY: MDL

© 15334

KUMIN
ARCHITECTURE INTERIORS PLANNING
9101 STREET, STE 200 ANCHORAGE, AK 99501
907 272 8663 FAX 907 272 8665

NEESE CONSTRUCTION, INC.

Adams, Morgenthaler & Co., Inc.
Civil & Structural Engineers
701 E. Tudor Rd. Suite 230
Anchorage, AK 99503
www.amc-engineers.com
ENGINEERS

Childrens Dental Clinic Building

4441 Diplomacy Drive, Anchorage AK 99508

Southcentral Foundation

No.	Description	Date

Drawn By: Author
Checked By: MDL
Date: 24 DEC 2018
Phase: RECORD DRAWINGS
Job No: 21519.00
SHEET TITLE: FLOOR PLAN - MECHANICAL - LEVEL P5
SHEET NO: MP205

C:\Users\ERP AMC-ARCH\Documents\SCF CDCB - MEP_ERP.rvt

1/22/2019 2:19:22 PM

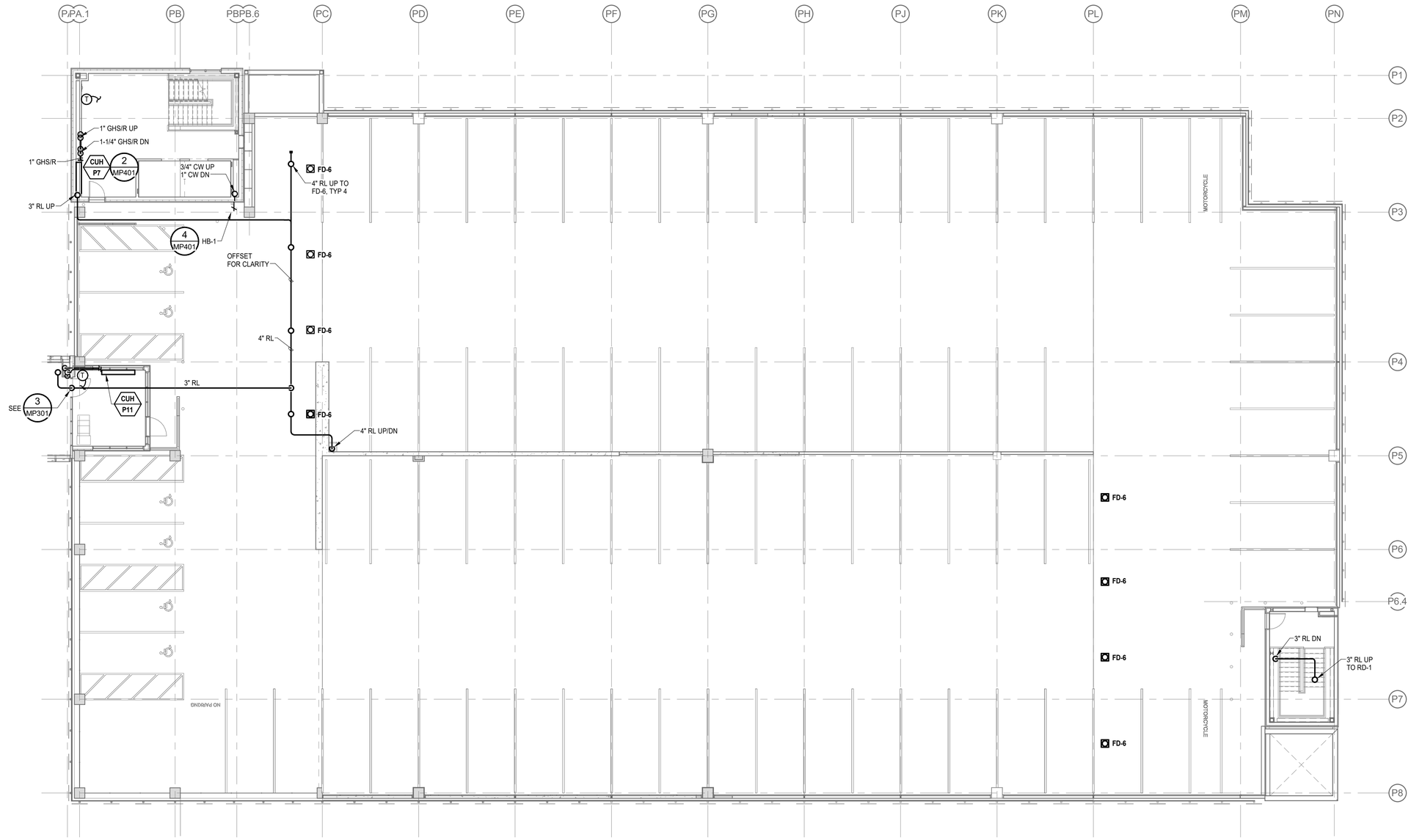

1 MP206 **FLOOR PLAN - MECHANICAL - LEVEL P6**
Scale: 3/32" = 1'-0"

SCALE: 3/32" = 1' - 0"
0' 5'-4" 10'-8" 21'-4" 42'-8"

THESE PROJECT RECORD DOCUMENTS HAVE BEEN MODIFIED TO INCLUDE FIELD MARKUPS PROVIDED BY THE CONTRACTOR. AMC ENGINEERS HAS NOT FIELD VERIFIED THIS INFORMATION AND DOES NOT CERTIFY THE COMPLETENESS AND/OR ACCURACY OF THESE DOCUMENTS.

BY: MDL

© 15334

KUMIN
ARCHITECTURE INTERIORS PLANNING
850 E STREET, STE 200 ANCHORAGE, AK 99501
T 907 272 8833 CoA NUMBER: AEC0231

NEESER CONSTRUCTION, INC.
Adams, Morgenthaler & Co., Inc.
Co.A No. C0042 - 907.257.9190
701 E. Tudor Rd. Suite 250
Anchorage, AK 99503
www.amc-engineers.com
AMC ENGINEERS

Childrens Dental Clinic Building

4441 Diplomacy Drive, Anchorage AK 99508
Southcentral Foundation

No.	Description	Date

Drawn By: Author
Checked By: MDL
Date: 24 DEC 2018
Phase: RECORD DRAWINGS
Job No: 21519.00
SHEET TITLE: FLOOR PLAN - MECHANICAL - LEVEL P6

SHEET NO:
MP206

C:\Users\ERP\AMC-ANCH\Documents\SCF CDC8 - MEP_ERP.rvt
12/21/2018 2:18:25 PM

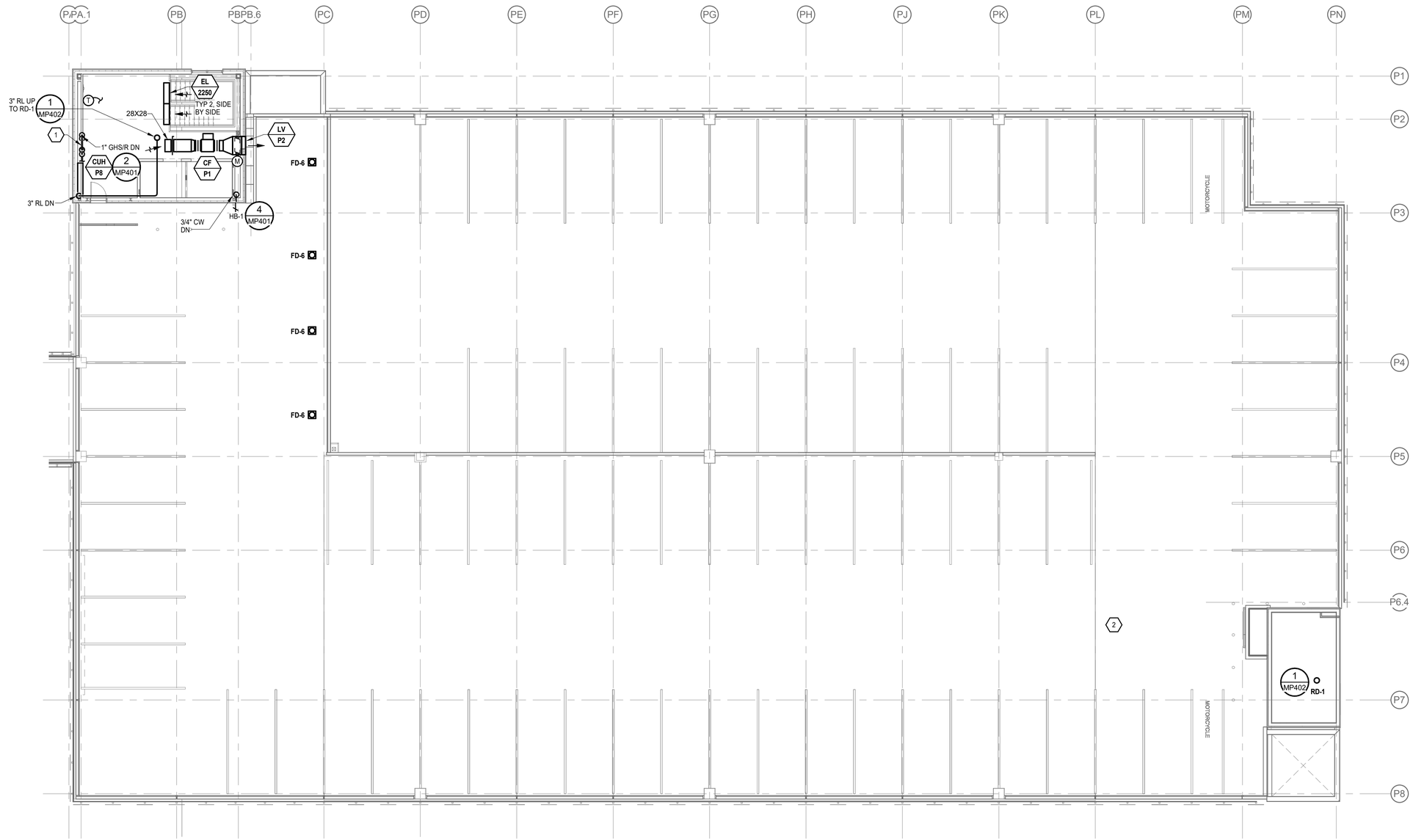

1 MP207 **FLOOR PLAN - MECHANICAL - LEVEL P7**
Scale: 3/32" = 1'-0"

SHEET NOTES (#)

1. PROVIDE DIFFERENTIAL PRESSURE SENSOR ON GHS/GHR PIPES. LOCATED IN WALL BEHIND ACCESS PANEL.
2. FLOOR DRAINS FOR THIS AREA ARE SHOWN ON MP206.

SCALE: 3/32" = 1' - 0"
0" 5'-4" 10'-8" 21'-4" 42'-8"

THESE PROJECT RECORD DOCUMENTS HAVE BEEN MODIFIED TO INCLUDE FIELD MARKUPS PROVIDED BY THE CONTRACTOR. AMC ENGINEERS HAS NOT FIELD VERIFIED THIS INFORMATION AND DOES NOT CERTIFY THE COMPLETENESS AND/OR ACCURACY OF THESE DOCUMENTS.

BY: MDL

© 15334

KUMIN
ARCHITECTURE INTERIORS PLANNING
9101 STREET, STE 200 ANCHORAGE, AK 99501
907 272 8455 FAX 907 272 8482

NEESE CONSTRUCTION, INC.

AMC ENGINEERS
Adams, Morgenthaler & Co., Inc.
Civil & Structural Engineers
701 E. Tudor Rd. Suite 230
Anchorage, AK 99503
www.amc-engineers.com

Childrens Dental Clinic Building

4441 Diplomacy Drive, Anchorage AK 99508

Southcentral Foundation

No.	Description	Date

Drawn By: Author
Checked By: MDL
Date: 24 DEC 2018
Phase: RECORD DRAWINGS
Job No: 21519.00
SHEET TITLE: FLOOR PLAN - MECHANICAL - LEVEL P7
SHEET NO: MP207

C:\Users\DEP AMC-ANCH\Documents\DCF CDCB - MEP_DRP.rvt
12/21/2018 2:16:29 PM

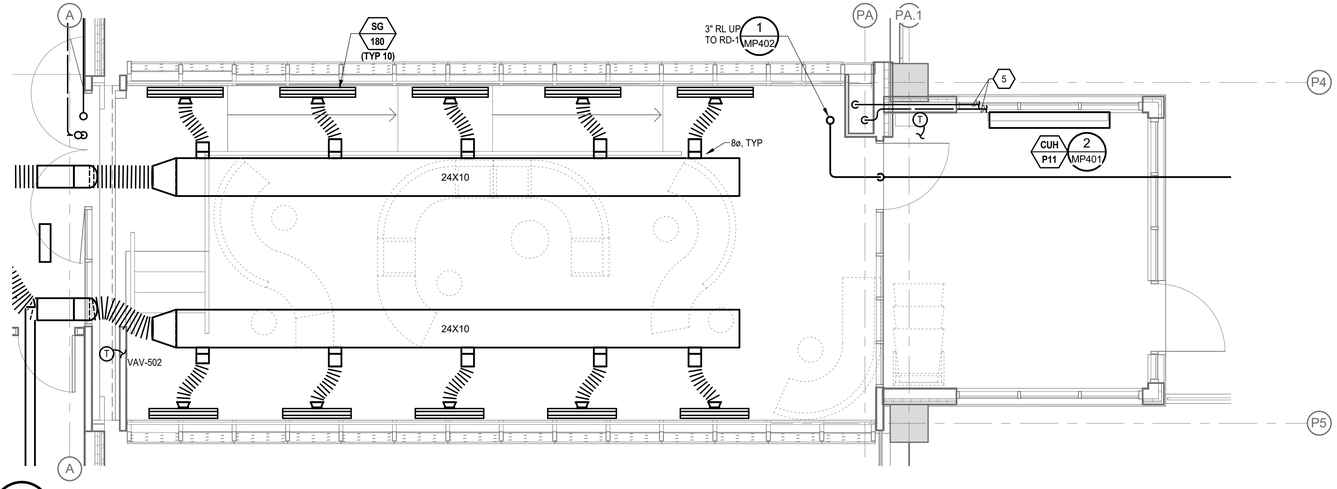

3 MP301 SKYBRIDGE PLAN - MECHANICAL - LEVEL 5 TO P6

Scale: 1/4" = 1'-0"

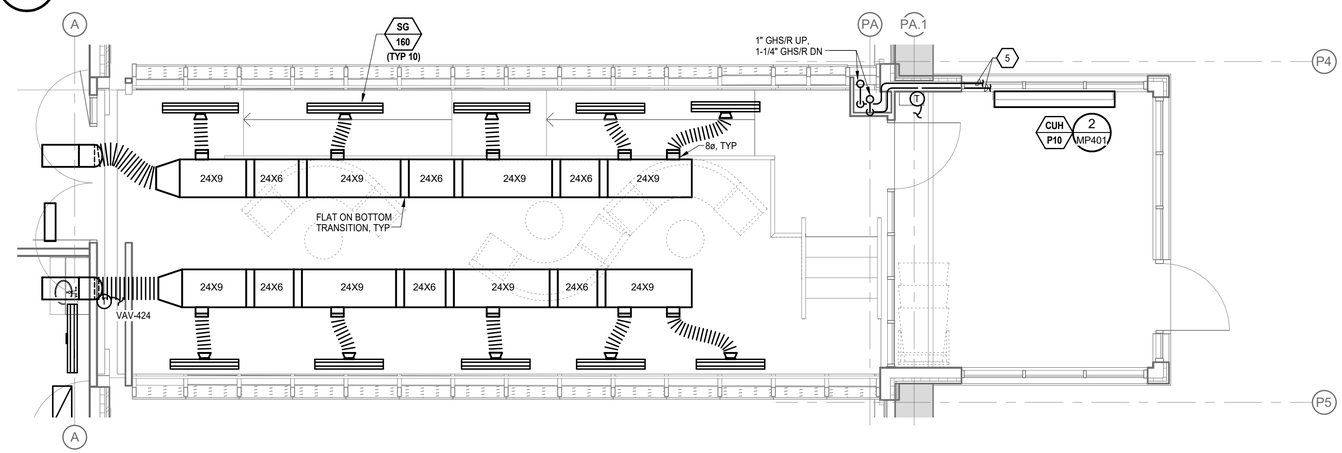

2 MP301 SKYBRIDGE PLAN - MECHANICAL - LEVEL 4 TO P5

Scale: 1/4" = 1'-0"

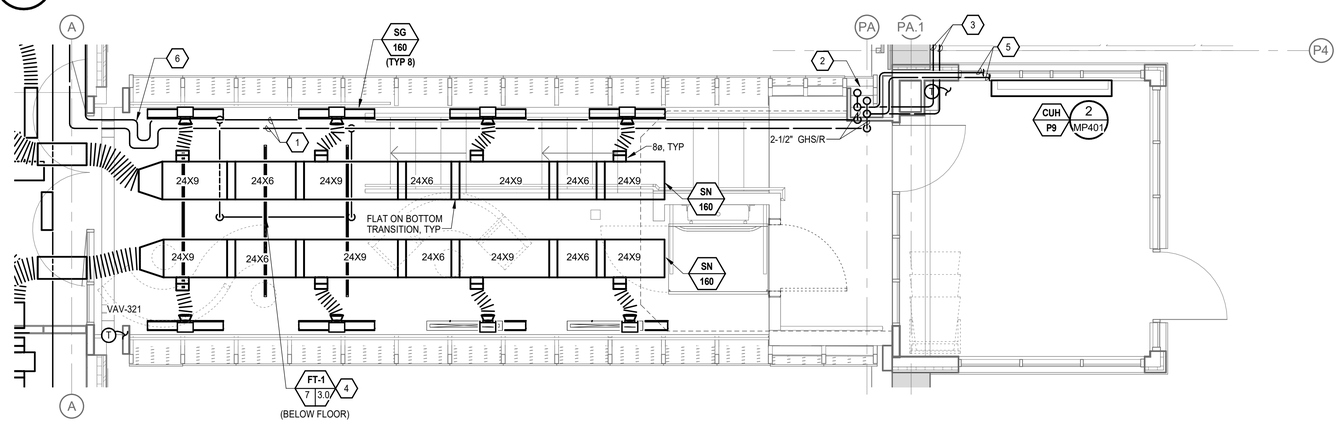

1 MP301 SKYBRIDGE PLAN - MECHANICAL - LEVEL 3 TO P4

Scale: 1/4" = 1'-0"

GENERAL NOTES

1. PROVIDE AREMOTE ELECTRONIC VOLUME DAMPER AT EACH DIFFUSER BRANCH CONNECTION. LOCATE CONTROL BOX ABOVE CEILING, SOUTH OF GRIDLINE A ON EACH LEVEL, IN AN ACCESSIBLE LOCATION.

SHEET NOTES (#)

1. 2-1/2" GHS/R ROUTED IN SOFFITT SPACE BELOW LEVEL 3 SKYBRIDGE FLOOR.
2. 1-1/2" GHS/R UP TO FEED CUH-P9, CUH-P10, AND CUH-P11 IN CHASE. PROVIDE BRANCH PIPING TO CUH-P9 AS SHOWN.
3. 2-1/2" GHS/R TO PARKING GARAGE STAIR TOWER. PIPES LOCATED TIGHT TO STRUCTURE ON LEVEL P3.
4. FT-1 LOCATED BELOW FLOOR. 3/4" GHS/R PIPES. PROVIDE AUTOMATIC FLOW LIMITING VALVE ON GHR.
5. 1" GHS/R PIPES TO CUH. ROUTE INSIDE WALL.
6. METRAFLEX, METRALOOP PIPE EXPANSION LOOPS. SELECTED FOR 4" DIFFERENTIAL MOVEMENT.

N

SCALE: 1/4" = 1' - 0"

0' 2' 4' 8' 16'

THESE PROJECT RECORD DOCUMENTS HAVE BEEN MODIFIED TO INCLUDE FIELD MARKUPS PROVIDED BY THE CONTRACTOR. AMC ENGINEERS HAS NOT FIELD VERIFIED THIS INFORMATION AND DOES NOT CERTIFY THE COMPLETENESS AND/OR ACCURACY OF THESE DOCUMENTS.

BY: MDL

© 15334

KUMIN
ARCHITECTURE INTERIORS PLANNING
9101 STREET, STE 200 ANCHORAGE, AK 99501
907 272 8663 FAX 907 272 8667

NEESE CONSTRUCTION, INC.

Adams, Morgenthaler & Co., Inc.
DBA AMC ENGINEERS
701 E. Tudor Rd. Suite 230
Anchorage, AK 99503
www.amc-engineers.com
ENGINEERS

Childrens Dental Clinic Building

4441 Diplomacy Drive, Anchorage AK 99508

Southcentral Foundation

No.	Description	Date

Drawn By: Author
Checked By: MDL
Date: 24 DEC 2018
Phase: RECORD DRAWINGS
Job No: 21519.00
SHEET TITLE: SKYBRIDGES - MECHANICAL
SHEET NO: MP301

C:\Users\ERP-AMC-ARCH\Documents\SCF CDCS - ME_ERP.rvt

12/21/2018 2:18:34 PM

SHEET NOTES (#)

1. 3" TO 4" ADAPTER AT GENERATOR EXHAUST CONNECTION AND 4" FLEXIBLE CONNECTOR TO MUFFLER INLET.
2. NOT USED.
3. GENERATOR MUFFLER, INSTALL AT APPROXIMATELY 9 AFF.
4. 36X36 RECIRCULATION DAMPER.
5. 72X72 EXHAUST DAMPER.
6. SCHEDULE 40 STEEL GENERATOR EXHAUST PIPE, 4" DIAMETER.
7. GENERATOR EXHAUST UP TO UNDERSIDE OF CONCRETE BEAM, DISCHARGING TO THE SOUTH. TERMINATE WITH 45 DEGREE CUT COVERED WITH 1" BIRD SCREEN.
8. INSULATE GENERATOR STACK AND MUFFLER.

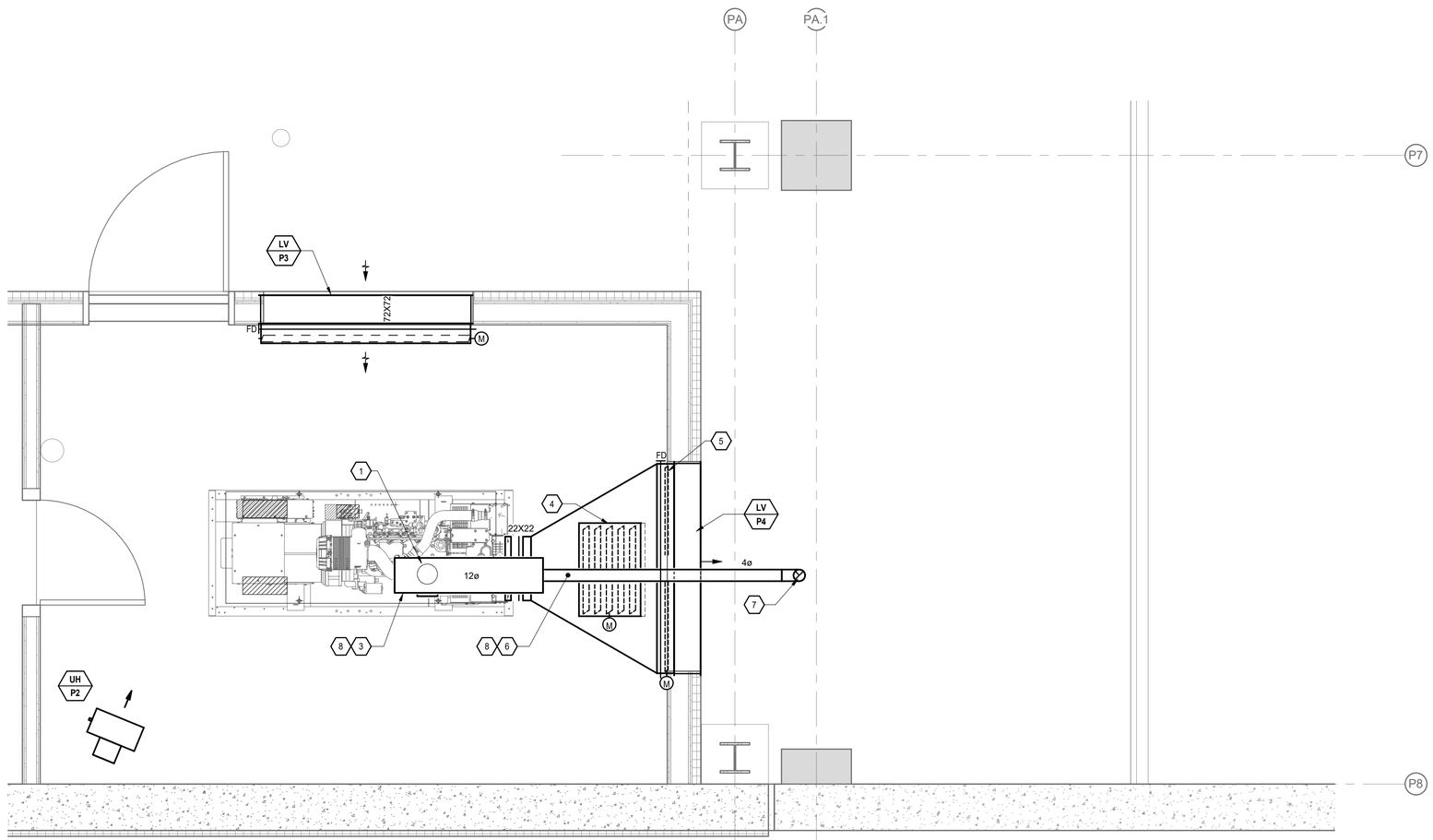

1 MP302 **ENLARGED PLAN - LEVEL P0 - GENERATOR ROOM**
Scale: 1/2" = 1'-0"

THESE PROJECT RECORD DOCUMENTS HAVE BEEN MODIFIED TO INCLUDE FIELD MARKUPS PROVIDED BY THE CONTRACTOR. AMC ENGINEERS HAS NOT FIELD VERIFIED THIS INFORMATION AND DOES NOT CERTIFY THE COMPLETENESS AND/OR ACCURACY OF THESE DOCUMENTS.

BY: MDL

© 15334

KUMIN
ARCHITECTURE INTERIORS PLANNING
808 E STREET, STE 200 ANCHORAGE, AK 99501
T 907 272 8833 CoA NUMBER: AECC231

NEESER CONSTRUCTION, INC.
AMC ENGINEERS
Adams, Morgenthaler & Co., Inc.
CoA No. C0042 - 907-257-9100
701 E. Tudor Rd. Suite 250
Anchorage, AK 99503
www.amc-engineers.com

Childrens Dental Clinic Building

4441 Diplomacy Drive, Anchorage AK 99508

Southcentral Foundation

No.	Description	Date

Drawn By: Author
Checked By: Checker

Date: 24 DEC 2018

Phase: RECORD DRAWINGS

Job No: 21519.00

SHEET TITLE: ENLARGED PLAN - LEVEL P0 - GENERATOR ROOM

SHEET NO: MP302

C:\Users\ERP.AMC-ANCH\Documents\SCF CDCB - MEP_ERP.rvt

12/21/2018 2:18:37 PM

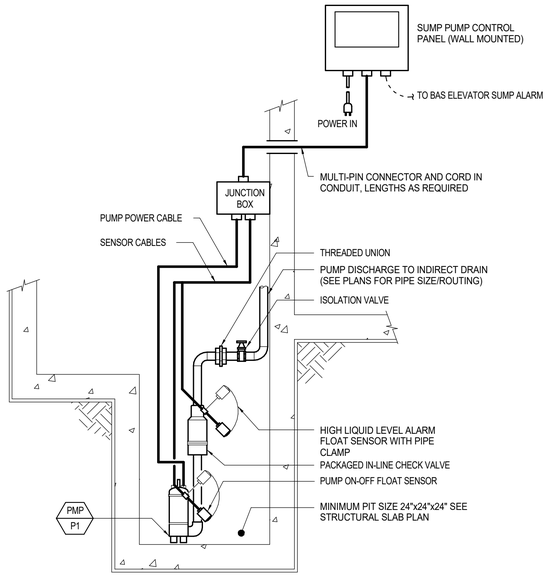

1 MP401 DETAIL - ELEVATOR SUMP PUMP

SCALE: NONE

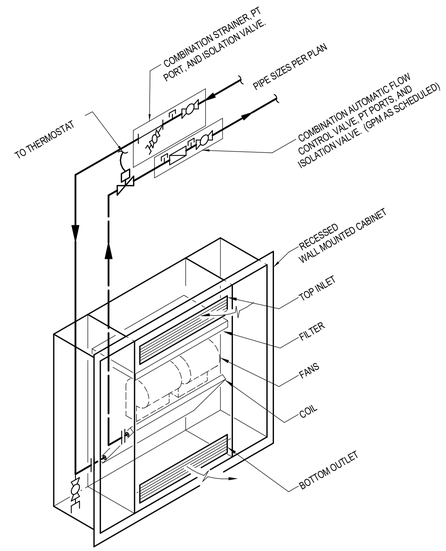

2 MP401 DETAIL - CABINET UNIT HEATER

SCALE: NONE

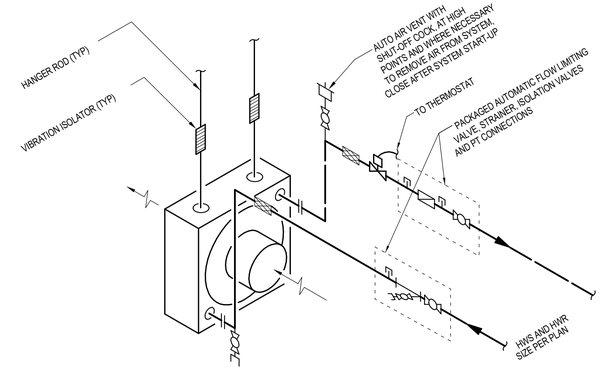

NOTES

1. FOR THREADED STEEL UH CONNECTIONS, PROVIDE DIELECTRIC UNION CONNECTIONS.

3 MP401 DETAIL - HORIZONTAL UNIT HEATER

SCALE: NONE

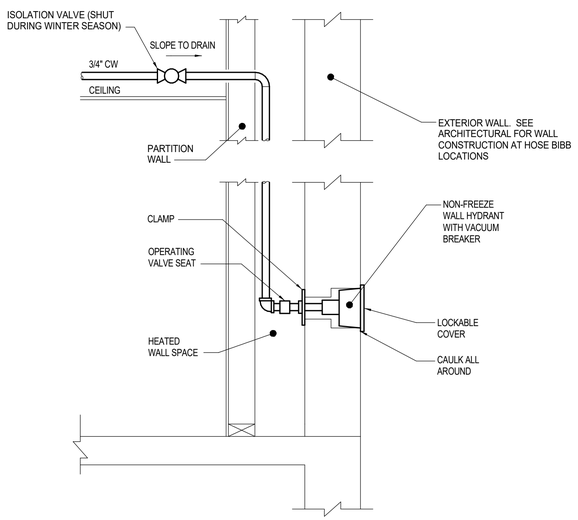

4 MP401 DETAIL - NON FREEZE HOSE BIBB

SCALE: NONE

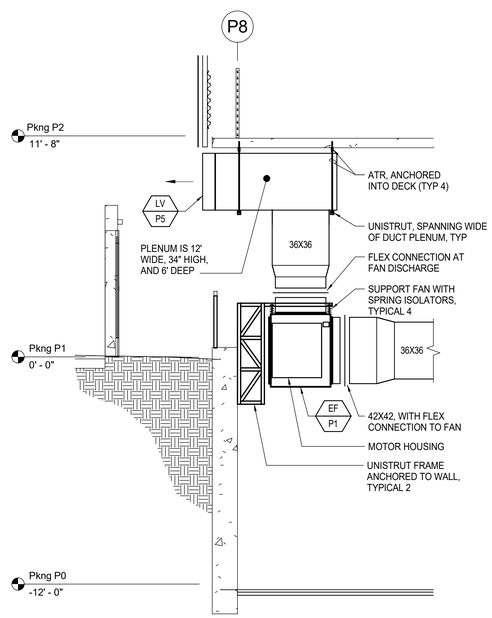

5 MP401 DETAIL - BASEMENT EXHAUST FAN (EF-P1)

SCALE: NONE

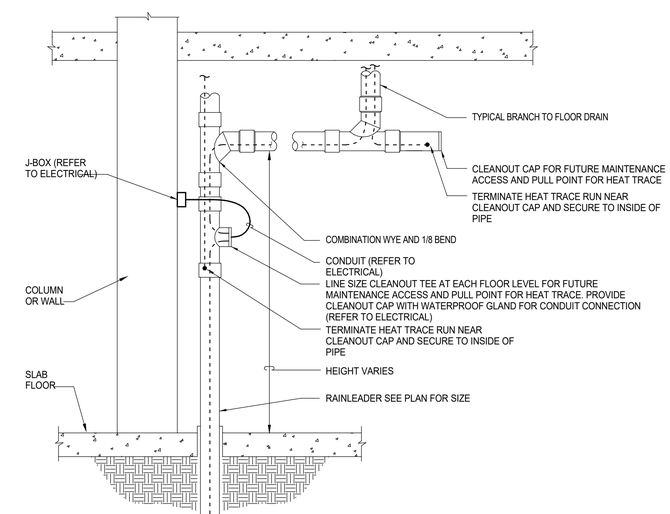

NOTES

1. CONTROL HEAT TRACE WITH DDC CONTROLLED CONTACT. REFER TO SPECIFICATIONS FOR HEAT TRACE CONTROL SEQUENCE OF OPERATIONS.

6 MP401 DETAIL - GARAGE RL HEAT TRACE CONNECTION

SCALE: NONE

THESE PROJECT RECORD DOCUMENTS HAVE BEEN MODIFIED TO INCLUDE FIELD MARKUPS PROVIDED BY THE CONTRACTOR. AMC ENGINEERS HAS NOT FIELD VERIFIED THIS INFORMATION AND DOES NOT CERTIFY THE COMPLETENESS AND/OR ACCURACY OF THESE DOCUMENTS.

BY: MDL

© 15334

KUMIN
ARCHITECTURE INTERIORS PLANNING
9101 STREET, STE 200 ANCHORAGE, AK 99501
907 272-8681 FAX 907 272-8695

NEESE CONSTRUCTION, INC.

AMC ENGINEERS
Adams, Morgenthaler & Co., Inc.
DBA AMC Engineers, PC
701 E. Tudor Rd. Suite 230
Anchorage, AK 99503
www.amc-engineers.com

Childrens Dental Clinic Building

4441 Diplomacy Drive, Anchorage AK 99508

Southcentral Foundation

No.	Description	Date

Drawn By: Author
Checked By: MDL
Date: 24 DEC 2018
Phase: RECORD DRAWINGS
Job No: 21519.00
SHEET TITLE: DETAILS AND DIAGRAMS - MECHANICAL
SHEET NO: MP401

C:\Users\BP AMC\ARCH\Documents\SCF CDCB - MEP_BP.rvt

12/21/2018 2:18:38 PM

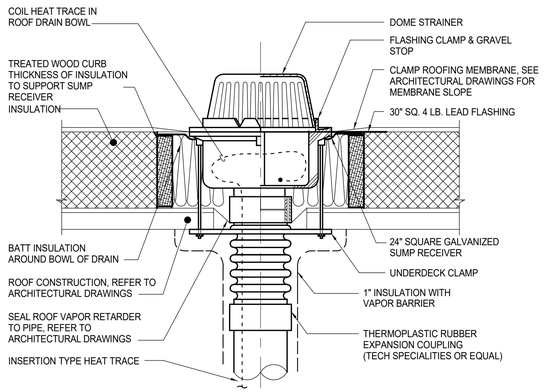

NOTES:

1. ROOFING THICKNESS MAY VARY. REFER TO ARCHITECTURAL DRAWINGS.
2. SIZE DRAIN OUTLET TO MATCH PIPE SIZE INDICATED ON PLANS

1 MP402 DETAIL - ROOF DRAIN

SCALE: NONE

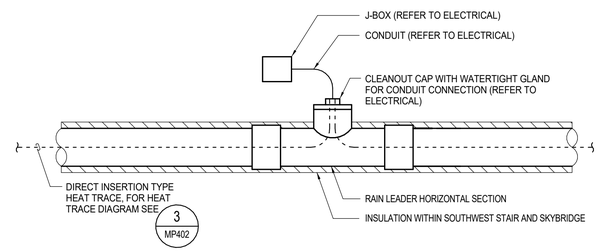

NOTES

1. CONTROL HEAT TRACE WITH DDC CONTROLLED CONTACT. REFER TO SPECIFICATIONS FOR HEAT TRACE CONTROL SEQUENCE OF OPERATIONS.

2 MP402 DETAIL - ROOF DRAIN HEAT TRACE CONNECTION

SCALE: NONE

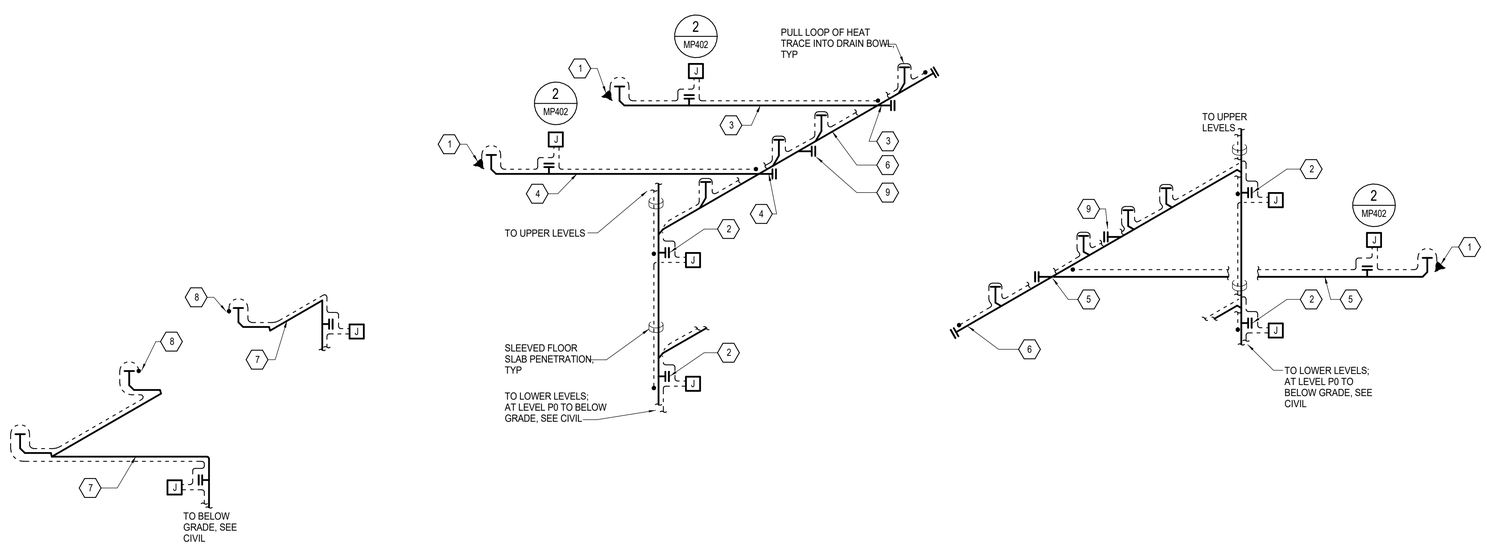

3 MP402 DIAGRAM - PARKING GARAGE AND STAIR TOWER RAINLEADER HEAT TRACE

SCALE: NONE

GENERAL NOTES

1. LOCATE HEAT TRACE ENDS SEALS WITHIN BODY OF FLOOR DRAINS OR CLEANOUTS FOR MAINTENANCE ACCESS AND PULL POINT FOR FUTURE HEAT TRACE REPLACEMENT. ALL ENDS OF HEAT TRACE CABLE SHALL BE TERMINATED AT AN ACCESSIBLE LOCATION.

DIAGRAM NOTES (#)

1. COIL 2 LINEAR FEET OF HEAT TRACE INTO DRAIN BOWL.
2. CLEANOUT TEE AT EACH FLOOR LEVEL FOR HEAT TRACE MAINTENANCE ACCESS AND PULL POINT FOR FUTURE HEAT TRACE REPLACEMENT, SEE 6/MP401.
3. SOUTHWEST STAIR ROOF DRAIN, LEVEL P6 ONLY, SEE PLANS. TERMINATE HEAT TRACE AT CONNECTION TO PARKING GARAGE HORIZONTAL DRAIN PIPE AND SECURE TO INSIDE OF PIPE. PROVIDE ADDITIONAL CLEANOUT IN PARKING GARAGE HORIZONTAL DRAIN PIPE FOR MAINTENANCE ACCESS AND PULL POINT FOR FUTURE HEAT TRACE REPLACEMENT.
4. SKYBRIDGE ROOF DRAIN LEVEL P6 ONLY, SEE PLANS. TERMINATE HEAT TRACE AT CONNECTION TO PARKING GARAGE HORIZONTAL DRAIN PIPE AND SECURE TO INSIDE OF PIPE. PROVIDE ADDITIONAL CLEANOUT IN PARKING GARAGE HORIZONTAL DRAIN PIPE FOR MAINTENANCE ACCESS AND PULL POINT FOR FUTURE HEAT TRACE REPLACEMENT.
5. NORTHEAST STAIR ROOF DRAIN, LEVEL P5 ONLY, SEE PLANS. TERMINATE HEAT TRACE AT CONNECTION TO PARKING GARAGE HORIZONTAL DRAIN PIPE AND SECURE TO INSIDE OF PIPE. PROVIDE ADDITIONAL CLEANOUT IN PARKING GARAGE HORIZONTAL DRAIN PIPE FOR MAINTENANCE ACCESS AND PULL POINT FOR FUTURE HEAT TRACE REPLACEMENT.
6. TYPICAL FOR PARKING GARAGE FLOORS P0 THROUGH P7 RAINWATER HEAT TRACE PIPING.
7. ALLEY WAY FLOOR DRAIN LEVEL P0 ONLY, SEE PLANS.
8. BRING HEAT TRACE INTO FLOOR DRAIN BOWL AND SECURE TO INSIDE OF PIPE.
9. PROVIDE CLEANOUT AT MID-POINT OF PARKING GARAGE HORIZONTAL DRAIN PIPE ON ALL LEVELS FOR MAINTENANCE ACCESS AND PULL POINT FOR FUTURE HEAT TRACE REPLACEMENT.

THESE PROJECT RECORD DOCUMENTS HAVE BEEN MODIFIED TO INCLUDE FIELD MARKUPS PROVIDED BY THE CONTRACTOR. AMC ENGINEERS HAS NOT FIELD VERIFIED THIS INFORMATION AND DOES NOT CERTIFY THE COMPLETENESS AND/OR ACCURACY OF THESE DOCUMENTS.

BY: MDL

© 15334

KUMIN
ARCHITECTURE INTERIORS PLANNING
9101 STREET, STE 200 ANCHORAGE, AK 99501
907 272 8663 FAX 907 272 8665

NEESE CONSTRUCTION, INC.

AMC ENGINEERS
Adams, Morgenthaler & Co., Inc.
Civil & Structural Engineers
701 E. Tudor Rd. Suite 230
Anchorage, AK 99503
www.amc-engineers.com

Childrens Dental Clinic Building

4441 Diplomacy Drive, Anchorage AK 99508

Southcentral Foundation

No.	Description	Date

Drawn By: Author
Checked By: MDL
Date: 24 DEC 2018
Phase: RECORD DRAWINGS
Job No: 21519.00
SHEET TITLE: DETAILS AND DIAGRAMS - MECHANICAL
SHEET NO: MP402

C:\Users\DRP AMC\ARCH\Documents\SCF CDCB - MEP_DRP.rvt
12/21/2018 2:18:39 PM

GENERAL

SYMBOL	DESCRIPTION
	SHEET NOTE CONVENTION:
1 / 2.	REFERENCED SHEET NOTE
	GENERAL SHEET NOTE
#	FEEDER IDENTIFICATION TAG
	FEEDER NUMBER
1 / E0.1	DETAIL REFERENCE
	DETAIL NUMBER
	SHEET WHERE DETAIL APPEARS
A / E0.1	SECTION REFERENCE
	SECTION LETTER
	SHEET WHERE SECTION APPEARS
	LINE WORK CONVENTION:
	NEW OR REINSTALLED ITEM
	ITEM TO BE DEMOLISHED
	EXISTING ITEM TO REMAIN
	FUTURE ITEM
	EXISTING ITEM TO BE RELOCATED
P-1,3	CIRCUITING CONVENTION
	CIRCUIT NUMBER(S)
	PANEL
	BRANCH CIRCUIT HOMERUN TO PANELBOARD
	NUMBER OF MARKS INDICATE NUMBER OF CONDUCTORS IN RACEWAY, NOT COUNTING GROUNDING CONDUCTORS. (ABSENCE OF MARKS INDICATE TWO CONDUCTORS, PLUS REQUIRED GROUNDS)
	NUMBER OF ARROWS INDICATE NUMBER OF CIRCUITS
	UNSWITCHED CONDUCTORS SHOWN ON HOMERUN SIDE OF NEUTRAL
	NEUTRAL
	SWITCHED CONDUCTORS SHOWN ON LOAD SIDE OF NEUTRAL

CONDUIT/FEEDER LINE CONVENTION:

SYMBOL	DESCRIPTION
	UNDERGROUND POWER
	UNDERGROUND POWER, EXISTING
	UNDERGROUND TELECOM
	UNDERGROUND TELECOM, EXISTING
	UNDERGROUND DEMO

ABBREVIATIONS

ACS	ACCESS CONTROL SYSTEM
AFF	ABOVE FINISHED FLOOR
AFG	ABOVE FINISHED GRADE
AL	ALUMINUM
APPROX	APPROXIMATE
AHJ	AUTHORITY HAVING JURISDICTION
BAS	BUILDING AUTOMATION SYSTEM
CKT	CIRCUIT
CCTV	CLOSED CIRCUIT TELEVISION
CMH	COMMUNICATIONS MANHOLE
C	CONDUIT
C.O.	CONDUIT ONLY
CU	COPPER
(D)	DEMOLISH
DB	DECIBEL
EL	EMERGENCY LIGHT
ELU	EMERGENCY LIGHTING UNIT
ENL	EMERGENCY NIGHT LIGHT
(E)	EXISTING
(F)	FUTURE
FAA	FIRE ALARM ANNUNCIATOR
FACP	FIRE ALARM CONTROL PANEL
FO	FIBER OPTIC
FOPP	FIBER OPTIC PATCH PANEL
FSD	FIRE/SMOKE DAMPER
HZ	FREQUENCY
HP	HORSEPOWER
IAW	IN ACCORDANCE WITH
K	KELVIN
KVA	KILO VOLT-AMPS
KW	KILOWATT
LCP	LIGHTING CONTROL PANEL
MCC	MOTOR CONTROL CENTER
MCP	MOTOR CONTROL PANEL
MDS	MAIN DISTRIBUTION SWITCHBOARD
MIN	MINIMUM
MM	MULTIMODE FIBER OPTIC CABLE
MTR	MAIN TELECOM ROOM
NEC	NATIONAL ELECTRICAL CODE
NFPA	NATIONAL FIRE PROTECTION ASSOCIATION
NL	NIGHT LIGHT
NC	NORMALLY CLOSED
NO	NORMALLY OPEN
N/A	NOT APPLICABLE
NIC	NOT IN CONTRACT
NTS	NOT TO SCALE
OFC	OPTICAL FIBER CABLE
OFCI	OWNER FURNISHED, CONTRACTOR INSTALLED
OFOI	OWNER FURNISHED, OWNER INSTALLED
PA	PUBLIC ADDRESS
PH	PHASE (ELECTRICAL)
PLC	PROGRAMMABLE LOGIC CONTROLLER
PMCS	POWER MONITORING CONTROL SYSTEM
SM	SINGLEMODE FIBER OPTIC CABLE
SMR	SURFACE MOUNTED RACEWAY
SPD	SURGE PROTECTIVE DEVICE
TELECOM	TELECOMMUNICATION
TR	TELECOMMUNICATION ROOM
TYP	TYPICAL
UON	UNLESS OTHERWISE NOTED
VR	VANDAL RESISTANT
VSD	VARIABLE SPEED DRIVE
VAC	VOLTS (ALTERNATING CURRENT)
VDC	VOLTS (DIRECT CURRENT)
V	VOLTS OR VOLTAGE
W	WATT
WP	WEATHERPROOF
WG	WIRE GUARD

LIGHTING

SYMBOL	DESCRIPTION
	LIGHTING FIXTURE, LINEAR LAMP(S)
	LIGHTING FIXTURE - WALL MOUNTED
	LIGHTING FIXTURE - SURFACE OR PENDANT MOUNTED
	LIGHTING FIXTURE - RECESS MOUNTED
	LIGHTING FIXTURE CONNECTED TO EMERGENCY POWER CIRCUIT, NIGHT LIGHT
	LIGHTING FIXTURE CONNECTED TO EMERGENCY POWER CIRCUIT
	EXIT FIXTURE - WALL MOUNTED SHADED AREA(S) DENOTE FACE(S) OF SIGN, ARROWS AS NOTED (FIXTURE TYPE EX)
	EXIT FIXTURE - CEILING MOUNTED SHADED AREA(S) DENOTE FACE(S) OF SIGN, ARROWS AS NOTED (FIXTURE TYPE EX)
EXIT	EXTERNALLY ILLUMINATED EXIT SIGN
	EMERGENCY LIGHTING UNIT - WALL MOUNTED (FIXTURE TYPE XA)
	EMERGENCY LIGHTING UNIT - CEILING MOUNTED (FIXTURE TYPE XA)
	SITE LIGHTING - POLE MOUNTED
$	SINGLE POLE SWITCH
$3	THREE-WAY SWITCH
$4	FOUR-WAY SWITCH
$a	SWITCH FOR FIXTURES MARKED 'a',
$D	DIMMER SWITCH
$K	KEYED SWITCH
$M	MOMENTARY SWITCH
$O	OCCUPANCY SENSOR/SWITCH
$P	PILOT LIGHTED SWITCH
PC	PHOTOCELL
	OCCUPANCY SENSOR - WALL MOUNTED
	OCCUPANCY SENSOR - CEILING MOUNTED
$a,b,c LV	LOW VOLTAGE SWITCH(ES) FOR FIXTURES MARKED 'a', 'b', 'c' AS NOTED
$a,b,c KLV	KEYED LOW VOLTAGE SWITCH(ES) FOR FIXTURES MARKED 'a', 'b', 'c', ETC

TELECOM

SYMBOL	DESCRIPTION
X	TELECOMMUNICATION OUTLET - WALL MOUNTED (X DENOTES NUMBER OF PORTS)
X	TELECOMMUNICATION OUTLET - FLOOR MOUNTED (X DENOTES NUMBER OF PORTS)
C,X	TELECOMMUNICATION OUTLET - CEILING MOUNTED (X DENOTES NUMBER OF PORTS)
	TELEPHONE OUTLET, SINGLE JACK - WALL MOUNTED
IC	INTERCOM CALL IN STATION
WP	WIRELESS ACCESS POINT

POWER

SYMBOL	DESCRIPTION
	RECEPTACLE MOUNTING :
	RECEPTACLE - WALL MOUNTED (SEE "RECEPTACLE TYPES" BELOW)
	RECEPTACLE - FLOOR MOUNTED (SEE "RECEPTACLE TYPES" BELOW)
	RECEPTACLE - CEILING MOUNTED (SEE "RECEPTACLE TYPES" BELOW)
	RECEPTACLE TYPES :
	DUPLEX RECEPTACLE
	GROUND FAULT INTERRUPTER, DUPLEX RECEPTACLE
	DOUBLE DUPLEX RECEPTACLE
	GROUND FAULT INTERRUPTER, DOUBLE DUPLEX RECEPTACLE
	RANGE RECEPTACLE - 50 AMP/250 VOLT
	ELECTRICAL DEVICES :
	SPECIAL PURPOSE RECEPTACLE, NEMA TYPE AS NOTED
	POWER POLE
	DRYER
	MOTOR
$T	SWITCH - THERMAL TRIP WITH HEATER
	SURFACE MOUNTED RACEWAY
	FUSED DISCONNECT
	NON-FUSED DISCONNECT
	COMBINATION STARTER/FUSED DISCONNECT
	STARTER OR CONTACTOR
J	JUNCTION BOX AND/OR CONNECTION TO EQUIPMENT
M	METERING DEVICE
VSD	VARIABLE SPEED DRIVE
PB	PUSHBUTTON - SPECIAL
	PUSHBUTTON (1 BUTTON)
	PUSHBUTTON (2 BUTTON)
	PUSHBUTTON (3 BUTTON)
	PANEL - SURFACE MOUNTED
	PANEL - FLUSH MOUNTED
	TRANSFORMER
	RELAY
	GROUND FAULT RELAY

FIRE ALARM

SYMBOL	DESCRIPTION
F	FIRE ALARM MANUAL PULL STATION
X	FIRE ALARM STROBE - WALL MOUNTED (X DENOTES CANDELA RATING IF OTHER THAN 15cd)
X	FIRE ALARM STROBE - CEILING MOUNTED (X DENOTES CANDELA RATING IF OTHER THAN 15cd)
H	FIRE ALARM HORN - WALL MOUNTED
H	FIRE ALARM HORN - CEILING MOUNTED
S	FIRE ALARM SPEAKER - WALL MOUNTED
S	FIRE ALARM SPEAKER - CEILING MOUNTED
	BELL - WALL MOUNTED
X	FIRE ALARM HORN/STROBE - WALL MOUNTED (X DENOTES CANDELA RATING IF OTHER THAN 15cd)
X	FIRE ALARM HORN/STROBE - CEILING MOUNTED (X DENOTES CANDELA RATING IF OTHER THAN 15cd)
X	FIRE ALARM SPEAKER/STROBE - WALL MOUNTED (X DENOTES CANDELA RATING IF OTHER THAN 15cd)
X	FIRE ALARM SPEAKER/STROBE - CEILING MOUNTED (X DENOTES CANDELA RATING IF OTHER THAN 15cd)
X	FIRE ALARM CHIME/STROBE - WALL MOUNTED (X DENOTES CANDELA RATING IF OTHER THAN 15cd)
X	FIRE ALARM CHIME/STROBE - CEILING MOUNTED (X DENOTES CANDELA RATING IF OTHER THAN 15cd)
P	PHOTOELECTRIC SMOKE DETECTOR
P	MULTI-TECHNOLOGY SMOKE DETECTOR
H	HEAT DETECTOR
H 135°	FIXED TEMPERATURE HEAT DETECTOR (135 DEGREES FAHRENHEIT)
DD	DUCT DETECTOR
FS	FLOW SWITCH
TS	TAMPER SWITCH
PS	PRESSURE SWITCH
	DOOR HOLDER
DC	DOOR HOLDER/CLOSER
FACP	FIRE ALARM CONTROL PANEL
FAA	FIRE ALARM ANNUNCIATOR

SECURITY

SYMBOL	DESCRIPTION
GB	GLASS BREAK DETECTOR - WALL MOUNTED
GB	GLASS BREAK DETECTOR - CEILING MOUNTED
IR L	SECURITY INFRARED MOTION DETECTOR - LONG RANGE - WALL MOUNTED
IR 360	SECURITY INFRARED MOTION DETECTOR - 360 DEGREE COVERAGE - CEILING MOUNTED
D	DOOR CONTACT
KP	SECURITY KEYPAD
	SECURITY CARD READER
	CCTV CAMERA - PAN TILT ZOOM
	CCTV CAMERA - FIXED
D D	DURESS ROOM INDICATOR LIGHT - CEILING MOUNTED, WALL MOUNTED

NOTE: THIS IS A STANDARD LEGEND. NOT ALL SYMBOLS NECESSARILY APPEAR ON THE DRAWINGS

ELECTRICAL DRAWING INDEX

EP100 ELECTRICAL LEGEND
EP101 LIGHTING FIXTURE & PANEL SCHEDULE
EP102 PANEL SCHEDULES
EP103 PANEL SCHEDULES
EP200 FLOOR PLAN - LIGHTING - LEVEL PB
EP201 FLOOR PLAN - LIGHTING - LEVEL PG
EP202 FLOOR PLAN - LIGHTING - LEVEL P1
EP203 FLOOR PLAN - LIGHTING - LEVEL P2
EP204 FLOOR PLAN - LIGHTING - LEVEL P3
EP205 FLOOR PLAN - LIGHTING - LEVEL P4
EP206 FLOOR PLAN - LIGHTING - LEVEL P5
EP207 FLOOR PLAN - LIGHTING - LEVEL P6
EP300 FLOOR PLAN - POWER & SPECIAL SYSTEMS - LEVEL PB
EP301 FLOOR PLAN - POWER & SPECIAL SYSTEMS - LEVEL PG
EP302 FLOOR PLAN - POWER & SPECIAL SYSTEMS - LEVEL P1
EP303 FLOOR PLAN - POWER & SPECIAL SYSTEMS - LEVEL P2
EP304 FLOOR PLAN - POWER & SPECIAL SYSTEMS - LEVEL P3
EP305 FLOOR PLAN - POWER & SPECIAL SYSTEMS - LEVEL P4
EP306 FLOOR PLAN - POWER & SPECIAL SYSTEMS - LEVEL P5
EP307 FLOOR PLAN - POWER & SPECIAL SYSTEMS - LEVEL P6
EP401 ENLARGED PLAN - SKYBRIDGE
EP502 ENLARGED FLOOR PLANS - ELECTRICAL
EP503 ENLARGED FLOOR PLANS - ELECTRICAL
EP701 ONE-LINE DIAGRAM - TELECOM
EP801 PARTIAL POWER ONE-LINE DIAGRAM

THESE PROJECT RECORD DOCUMENTS HAVE BEEN MODIFIED TO INCLUDE FIELD MARKUPS PROVIDED BY THE CONTRACTOR. AMC ENGINEERS HAS NOT FIELD VERIFIED THIS INFORMATION AND DOES NOT CERTIFY THE COMPLETENESS AND/OR ACCURACY OF THESE DOCUMENTS.

BY: ASJ

© 15334

NEESE CONSTRUCTION, INC.
AMC ENGINEERS
Adams, Morgenthaler & Co., Inc.
DBA AMC ENGINEERS
701 E. Tudor Rd. Suite 230
Anchorage, AK 99503
www.amc-engineers.com

Childrens Dental Clinic Building

4441 Diplomacy Drive, Anchorage AK 99508

Southcentral Foundation

No.	Description	Date

Drawn By: ERP/MPL
Checked By: ASJ
Date: 24 DEC 2018
Phase: RECORD DRAWINGS
Job No: 21519.00
SHEET TITLE: ELECTRICAL LEGEND
SHEET NO: EP100

C:\Users\ERP AMC-ARCH\Documents\SCF CDCB - MEP_ERP.rvt
12/21/2018 1:3:52 PM

FIXTURE SCHEDULE NOTES

1. REFER TO SPECIFICATION SECTION 26 50 00 FOR ADDITIONAL REQUIREMENTS REGARDING LIGHTING FIXTURES, LAMPS, AND DRIVERS/BALLASTS.
2. PROVIDE AN UNSWITCHED CIRCUIT CONNECTION (CIRCUIT AS NOTED ON DRAWINGS) TO EXIT SIGNS (FIXTURE TYPE EX AND EX2), EMERGENCY LIGHTING FIXTURES (FIXTURE TYPE XA AND FIXTURES EQUIPPED WITH EMERGENCY BATTERY PACK).
3. REFER TO LIGHTING FLOOR PLANS AND ARCHITECTURAL ELEVATIONS FOR EXACT MOUNTING HEIGHTS.
4. MOUNT FIXTURE AT A MINIMUM HEIGHT OF 8 FEET AFF. COORDINATE EXACT HEIGHT AND LOCATION OF FIXTURE WITH ADJACENT EQUIPMENT.
5. MOUNT FIXTURE TO UNISTRUT STRUCTURE ABOVE CEILING SUCH THAT BOTTOM OF FIXTURE IS RECESSED ONE INCH ABOVE BOTTOM OF WOOD SLAT CEILING. REFER TO ARCHITECTURAL SHEETS FOR MOUNTING DETAIL.
6. PENDENT FIXTURES DOWN TO BOTTOM OF STRUCTURE. IN AREAS WITH MECHANICAL EQUIPMENT, DUCTWORK AND PIPING, PENDENT FIXTURES DOWN TO BOTTOM OF MECHANICAL DUCTWORK OR PIPING AS APPROPRIATE. TYPE Z: FIXTURE PENDENTS SHALL BE RIGID (THREADED HANGAR RODS) AND SHALL BE SWAY BRACED WHERE PENDENTS EXCEED 24 INCHES IN LENGTH. TYPE H1: COORDINATE WITH CONSTRUCTION FOR EXACT CUSTOM LENGTHS OF AIRCRAFT CABLE.
7. PROVIDE SITE LIGHTING FIXTURE(S) WITH LITHONIA ROUND STRAIGHT POLE WITH VIBRATION DAMPER OPTION AND WHITE STANDARD FINISH, CATALOG #RSS-X-VD-DWH.
8. PROVIDE TECH LIGHTING MONORAIL TRACK CURVED AS SHOWN ON DRAWINGS (700MOA) WITH ONE 150 WATT MAGNETIC SURFACE TRANSFORMER (700MOASRT15D).
9. PENDENT MOUNT FIXTURE TO 10'-0" AFF BETWEEN FLOOR LANDINGS IN STAIRWELLS, UNLESS OTHERWISE NOTED ON DRAWINGS.
10. PROVIDE WALL ARM MOUNTED FIXTURES WITH 18 INCH ARM LENGTH AND MOUNT TO 8 FOOT 6 INCHES AFF.
11. PROVIDE WITH DRYWALL GRID ADAPTER WHERE NOTED ON DRAWINGS.
12. PROVIDE EMERGENCY BATTERY PACK OPTION FOR FIXTURES NOTED ON THE DRAWINGS AS EMERGENCY FIXTURES.
13. FIELD LOCATE POWER SUPPLY(S) IN ADJACENT ACCESSIBLE CEILING SPACE.

LIGHTING FIXTURE SCHEDULE

TYPE	DESCRIPTION	LAMP TYPE	COLOR TEMP	LUMENS	BALLAST/DRIVER	MOUNTING	NOTES
D	SELUX L36-1A30-35-LW-DC-4-WH-277-DML 2', RUN LENGTH AS SHOWN ON DRAWINGS, 100% DIRECT LINEAR LIGHT OUTPUT, LED OPTIMIZED SHIELDING, WHITE FINISH	LED	3500°K	617/FT	0-10V DIMMING	SEMI-RECESSED	5 &13
H1	AXIS BDLED-B3-MF-750-80-35-SO-4-W-UNV-D-1-CA(#) 2'x4', EXTRUDED ALUMINUM HOUSING, WHITE POWDER COATED REFLECTOR, FROSTED ACRYLIC LENS, SINGLE CIRCUIT, SPOTLESS LENS SHIELDING	LED	3500°K	750/FT	0-10V DIMMING	PENDENT STRUCTURE	6 & 13
K	LITHONIA DMW-2-54T5HO-MVOLT-GEB10PS 8"X4', 2-LAMP, FIBERGLASS REINFORCED POLYESTER HOUSING, STEEL WIREWAY, ACRYLIC LENS	2-F54T5HO/RE841	4100°K	-	(1) 2-LAMP ELECTRONIC	SURFACE WALL	
N2	AXIS TBDILED-B3-MF-300-700-80-35-SO-S#-W-UNV-D-CA(#) SYSTEM RUN LENGTH AS SHOWN ON DRAWINGS, LINEAR CUSTOM DIRECT/INDIRECT LIGHT DISTRIBUTION, MID FLEX LED LIGHT ENGINE, 80 CRI, SPOTLESS LENS, WHITE FINISH, UNIVERSAL VOLTAGE	LED	3500°K	700/FT DIRECT 300/FT INDIRECT	0-10V DIMMING	PENDENT CEILING	10 &13
Z	LITHONIA Z-2-32-277-GEB10PS WGZ48 2'X4', 2-LAMP, STEEL HOUSING, WHITE ENAMEL FINISH, WITH 48" WHITE WIREGUARD	2-F32T8/RE841	4100°K	-	(1) 2-LAMP ELECTRONIC	PENDENT STRUCTURE TO 10'-0" AFF	6
RR	AXIS TBWDLED-B3-MF-750-80-35-SO-8-W-UNV 2"X8', LINEAR DIRECT LIGHT DISTRIBUTION, ACRYLIC LENS, WHITE FINISH	LED	3500°K	750/FT DIRECT	-	WALL MOUNT TO 8'-0" AFF	
SA2	LITHONIA DSX1LED-40C-700-40K-T4M-MVOLT-RPA-DWHXD SAME AS SA1, EXCEPT 15 FOOT POLE	LED	4000°K	8348	DRIVER WITH UNIT	15 FOOT POLE	8
SA3	LITHONIA DSX1LED-40C-700-40K-T4M-MVOLT-RPA-DWHXD SAME AS SA1, EXCEPT TWO FIXTURES ON SINGLE 15 FOOT POLE	LED	4000°K	16696	DRIVER WITH UNIT	15 FOOT POLE	8
SB	LITHONIA WSQ LED-2-10A700/40K-SR3-MVOLT-DDBXD 16"X7", ALUMINUM HOUSING, POWDER COAT FINISH, ACRYLIC LENS, DARK BRONZE FINISH	LED	4000°K	4028	DRIVER WITH UNIT	WALL EXTERIOR	
SD	LITHONIA KACM LED-30C-530-40K-R5-MVOLT-SRM-DWHXD 18" SQUARE, 30 LED, SURFACE MOUNT, TYPE 5 DISTRIBUTION, MULTI-VOLTAGE DRIVER (120-277V), WHITE FINISH	LED	4000°K	7007	DRIVER WITH UNIT	SURFACE CEILING	
SE	KIRLIN LRR-04002-43-41K-WFL-37F 4" DIAMETER, OPEN APPEARANCE DOWNLIGHT, WIDE FLOOD DISTRIBUTION, DARK BRONZE ACRYLIC ENAMELED CONE FLANGE, ACRYLIC ENAMELED ALUMINUM HOUSING, WET LOCATION, MULTI-VOLTAGE (120-277V)	LED	4100°K	800	DRIVER WITH UNIT	RECESSED CEILING	
SG	LITHONIA PGX LED-P5-40K-T5M-MVOLT-SRM-DWHXD 16" CIRCULAR, TYPE 5 MEDIUM DISTRIBUTION, MULTI-VOLTAGE DRIVER (120-277V), SURFACE MOUNT, WHITE FINISH	LED	5000°K	11850	DRIVER WITH UNIT	SURFACE CEILING	
EX	LITHONIA LRP-LED-#-GC/GMR-#-120/277-ELN LED EDGE-LIT EXIT SIGN WITH BRUSHED ALUMINUM MOUNTING PLATE, NICKEL-CADMIUM BATTERY, GREEN TEXTURED LETTERS, ARROWS, MIRRORED BACKGROUND, AND NUMBER OF FACES AS SHOWN ON DRAWINGS	WITH UNIT	-	-	N/A	WALL OVER DOOR OR CEILING AS NOTED	2
EX3	LITHONIA LV-S-W-X-G-120/277-ELN LED ALL-CONDITIONS EXIT WITH WHITE HOUSING COLOR, NICKEL-CADMIUM BATTERY, GREEN TEXTURED LETTERS, ARROWS AND NUMBER OF FACES AS SHOWN ON DRAWINGS	WITH UNIT	-	-	N/A	WALL OVER DOOR OR CEILING AS NOTED	2

0NH1

LOCATION: ELEC / COMM P011 **VOLTS:** 480/277 Wye **A.I.C RATING:** 12,399
FED FROM: MDS DISTRIBUTION SECTION **PHASES:** 3 **MAINS TYPE:** MLO
MOUNTING: SURFACE **WIRES:** 4 **RATING:** 250 A

CKT #	CIRCUIT DESCRIPTION	AMP	POLE	A		B		C		POLE	AMP	CIRCUIT DESCRIPTION	CKT #
1	0EH1 VIA ATS-E	40	3	5002	0					--	--	SPARE	2
3	--	--	--			3911	0			--	--	SPARE	4
5	--	--	--					5261	2167	3	20	EF-P1	6
7	UH-P3	250	3	17798	2167					--	--	--	8
9	--	--	--			16233	2167			--	--	--	10
11	--	--	--					19635	2167	3	20	MOTOR - GENERATOR P010 (UH-P2)	12
13	PWR - TRASH COMPACTOR	20	3	2771	2167					--	--	--	14
15	--	--	--			2771	2167			--	--	--	16
17	--	--	--					2771					18
19	SPARE	20	1	0	0					1	20	SPARE	20
21	SPARE	20	1			0	0			1	20	SPARE	22
23	SPARE	20	1					0	0	1	20	SPARE	24
25	SPARE	20	1	0	0					1	20	SPARE	26
27	SPARE	2	1			0	0			--	--	SPACE	28
29	SPARE	20	1					0	0	--	--	SPACE	30
31	SPARE	20	1	0	0					--	--	SPACE	32
33	SPARE	20	1			0	0			--	--	SPACE	34
35	SPARE	20	1					0	0	--	--	SPACE	36
37	PANEL 0NP1 VIA XFMR T-0N1	125	3	2220	0					--	--	SPACE	38
39	--	--	--			3170	0			--	--	SPACE	40
41	--	--	--					1960	0	--	--	SPACE	42

	PHASE A	PHASE B	PHASE C
TOTAL LOAD	32.1 kVA	30.4 kVA	34.0 kVA
TOTAL AMPS	117 A	110 A	124 A

LOAD TYPE	CONNECTED LOAD	DEMAND FACTOR	TOTAL LOAD WITH NEC FACTORS
LTG -	31046 VA	125.00%	38808 VA
MOTOR -	23060 VA	107.05%	24686 VA
Other	720 VA	100.00%	720 VA
PWR -	36520 VA	100.00%	36520 VA
REC -	5400 VA	100.00%	5400 VA

PANEL TOTALS	
TOTAL CONNECTED LOAD:	96.7 kVA
TOTAL NEC LOAD:	106.1 kVA
TOTAL CONNECTED AMPS:	116 A
TOTAL NEC AMPS:	128 A

NOTES:

THESE PROJECT RECORD DOCUMENTS HAVE BEEN MODIFIED TO INCLUDE FIELD MARKUPS PROVIDED BY THE CONTRACTOR. AMC ENGINEERS HAS NOT FIELD VERIFIED THIS INFORMATION AND DOES NOT CERTIFY THE COMPLETENESS AND/OR ACCURACY OF THESE DOCUMENTS.

BY: ASJ

© 15334

NEESE CONSTRUCTION, INC.

Adams, Morgenthaler & Co., Inc.
Voice: 907 243-2889
701 E. Tudor Rd. Suite 230
Anchorage, AK 99503
www.amc-engineers.com
AMC ENGINEERS

Childrens Dental Clinic Building

4441 Diplomacy Drive, Anchorage AK 99508

Southcentral Foundation

No.	Description	Date

Drawn By: ERP/MPL
Checked By: ASJ
Date: 24 DEC 2018
Phase: RECORD DRAWINGS
Job No: 21519.00
SHEET TITLE: LIGHTING FIXTURE & PANEL SCHEDULE
SHEET NO: EP101

C:\Users\ERP.AMC-ANCH\Documents\DCF CDCB - MEP_ERP.rvt
12/27/2018 1:33:56 PM

0NH2

LOCATION: ELEC P050 | VOLTS: 480/277 Wye | A.I.C RATING: 6,305
FED FROM: 0NH1 | PHASES: 3 | MAINS TYPE: MLO
MOUNTING: Surface | WIRES: 4 | RATING: 250 A

CKT #	CIRCUIT DESCRIPTION	AMP	POLE	A		B		C		POLE	AMP	CIRCUIT DESCRIPTION	CKT #
1	T-0N2	0	3	2940	966					1	20	LTG: ROOM P020, 3-2	2
3	--	--	--			2645	1824			1	20	LIGHTING PARKING LEVEL PB	4
5	--	--	--					3120	1395	1	20	LTG - SOUTH STAIRWELL LOBBIES	6
7	LIGHTING PARKING LEVEL PG	20	1	1596	1824					1	20	LIGHTING PARKING LEVEL P1	8
9	LIGHTING PARKING LEVEL P2	20	1			1824	1824			1	20	LIGHTING PARKING LEVEL P3	10
11	LIGHTING PARKING LEVEL P4, P5	20	1					2166	1178	1	20	LIGHTING PARKING LEVELS P5, P6	12
13	HEAT TRACE - CIRCUITS 1,4	30	1	2999	2662					1	30	HEAT TRACE - CIRCUIT 9	14
15	SPACE	--	--			0	0			--	--	SPACE	16
17	HEAT TRACE - CIRCUITS 2,3	30	1					1680	7036	1	30	HEAT TRACE - CIRCUITS 8,11	18
19	SPACE	--	--	0	0					--	--	SPACE	20
21	HEAT TRACE - CIRCUIT 5	30	1			2520	3324			1	30	HEAT TRACE - CIRCUIT 10	22
23	SPACE	--	--					0	0	--	--	SPACE	24
25	HEAT TRACE - CIRCUITS 6,7	20	1	600	1939					1	30	HEAT TRACE - CIRCUIT 12	26
27	SPARE	20	1			0	0			--	--	SPACE	28
29	SPARE	20	1					0	1330	3	15	EF-P1 (3HP) - PARKING LEVEL P0	30
31	SPARE	20	1	0	1330					--	--	--	32
33	SPARE	20	1			0	1330			--	--	--	34
35	HEAT TRACE - LEVEL G CANOPY	20	1					850	0	1	20	SPARE	36
37	SPARE	20	1	0	942					3	15	CF-P1 (2HP) - STAIR P1 SP1-P7	38
39	SPARE	20	1			0	942			--	--	--	40
41	SPARE	20	1					0	942	--	--	--	42
43	SPARE	20	1	0	0					1	20	SPARE	44
45	SPARE	20	1			0	0			1	20	SPARE	46
47	SPARE	20	1					0	0	1	20	SPARE	48
49	MAIN	0	3	0	0					1	20	SPARE	50
51	--	--	--			0	0			1	20	SPARE	52
53	--	--	--					0	0	1	20	SPARE	54

	PHASE A	PHASE B	PHASE C
TOTAL LOAD	17.8 kVA	16.2 kVA	19.7 kVA
TOTAL AMPS	65 A	59 A	72 A

LOAD TYPE	CONNECTED LOAD	DEMAND FACTOR	TOTAL LOAD WITH NEC FACTORS
LTG -	16719 VA	125.00%	20899 VA
MOTOR -	10057 VA	109.92%	11055 VA
PWR -	24096 VA	100.00%	24096 VA
REC -	2880 VA	100.00%	2880 VA

PANEL TOTALS	
TOTAL CONNECTED LOAD:	53.8 kVA
TOTAL NEC LOAD:	58.9 kVA
TOTAL CONNECTED AMPS:	65 A
TOTAL NEC AMPS:	71 A

NOTES:
EPD: EQUIPMENT PROTECTIVE DEVICE (30 mA TRIP)

0NP2

LOCATION: ELEC P050 | VOLTS: 120/208 Wye | A.I.C RATING: 4,744
FED FROM: T-0N2 | PHASES: 3 | MAINS TYPE: MLO
MOUNTING: Surface | WIRES: 4 | RATING: 225 A

CKT #	CIRCUIT DESCRIPTION	AMP	POLE	A		B		C		POLE	AMP	CIRCUIT DESCRIPTION	CKT #
1	REC - PARKING LEVEL P0 SOUTH	20	1	180	180					1	20	REC - PARKING LEVEL P4 SOUTH	2
3	PWR - PK LVL P0 S. BLUE PHONE & SNOW...	20	1			300	300			1	20	PWR - PARKING LEVEL P4 SOUTH BLUE PHONE	4
5	REC - PARKING LEVEL P1 SOUTH	20	1					180	180	1	20	REC - PARKING LEVEL P5 SOUTH	6
7	PWR - PARKING LEVEL P1 SOUTH BLUE PHONE	20	1	300	300					1	20	PWR - PARKING LEVEL P5 SOUTH BLUE PHONE	8
9	REC - PARKING LEVEL P2 SOUTH	20	1			180	180			1	20	REC - PARKING LEVEL P6 SOUTH	10
11	PWR - PARKING LEVEL P2 SOUTH BLUE PHONE	20	1					300	300	1	20	PWR - PARKING LEVEL P6 SOUTH BLUE PHONE	12
13	REC - PARKING LEVEL P3 SOUTH	20	1	180	180					1	20	REC - PARKING LEVEL P7 SOUTH	14
15	PWR - PARKING LEVEL P3 SOUTH BLUE PHONE	20	1			300	300			1	20	PWR - PARKING LEVEL P7 SOUTH BLUE PHONE	16
17	REC - SOUTH STAIRWELL - LEVELS 0 & 1	20	1					360	1080	1	15	CUH-P1,P2,P3 (1/15,30HP) SOUTH STAIRWELL	18
19	REC - SOUTH STAIRWELL - LEVELS 2 & 3	20	1	360	1080					1	15	CUH-P4,P5,P6 (1/15,30HP) SOUTH STAIRWELL	20
21	REC - SOUTH STAIRWELL - LEVELS 4 & 5	20	1			360	720			1	15	CUH-P7,P8 (1/15,30HP) SOUTH STAIRWELL	22
23	REC - SOUTH STAIRWELL - LEVELS 6 & 7	20	1					360	360	1	15	MOTOR - L3-5 STORAGE P020	24
25	SPARE	20	1	0	180					1	20	PWR - LEVEL P1 DOOR HARDWARE	26
27	SPARE	20	1			0	5			1	20	SNOW CHUTE ALARM STROBE	28
29	SPARE	20	1					0	0	1	20	SPARE	30
31	SPARE	20	1	0	0					1	20	SPARE	32
33	SPARE	20	1			0	0			1	20	SPARE	34
35	SPARE	20	1					0	0	1	20	SPARE	36
37	SPARE	20	1	0	0					1	20	SPARE	38
39	SPARE	20	1			0	0			1	20	SPARE	40
41	SPARE	20	1					0	0	1	20	SPARE	42

	PHASE A	PHASE B	PHASE C
TOTAL LOAD	2.9 kVA	2.6 kVA	3.1 kVA
TOTAL AMPS	25 A	22 A	26 A

LOAD TYPE	CONNECTED LOAD	DEMAND FACTOR	TOTAL LOAD WITH NEC FACTORS
MOTOR -	3240 VA	102.78%	3330 VA
PWR -	2585 VA	100.00%	2585 VA
REC -	2880 VA	100.00%	2880 VA

PANEL TOTALS	
TOTAL CONNECTED LOAD:	8.7 kVA
TOTAL NEC LOAD:	8.8 kVA
TOTAL CONNECTED AMPS:	24 A
TOTAL NEC AMPS:	24 A

NOTES:

0NP1

LOCATION: ELEC / COMM P011 | VOLTS: 120/208 Wye | A.I.C RATING: 7,965
FED FROM: T-0N1 | PHASES: 3 | MAINS TYPE: MAIN LUGS
MOUNTING: SURFACE | WIRES: 4 | RATING: 225 A

CKT #	CIRCUIT DESCRIPTION	AMP	POLE	A		B		C		POLE	AMP	CIRCUIT DESCRIPTION	CKT #
1	ROOM P010, P011	20	1	180	180					1	20	REC - GENERATOR P010 WEST	2
3	REC - ELEC / COMM P011	20	1			180	1000			2	20	PWR - DEWATERING PUMP	4
5	SHUNT TRIP FOR 0NH1	20	1					0	1000	--	--	--	6
7	REC - GENERATOR P010 - BATTERY CHARGER	20	1	360	360					1	20	DEWATERING PUMP CONTROL PANEL	8
9	GENERATOR P010 - BAS PANEL	20	1			360	360			1	20	REC - GENERATOR P010 EAST	10
11	SPARE	20	1					0	0	1	20	SPARE	12
13	SPARE	20	1	0	0					1	20	SPARE	14
15	SPACE	--	--			0	0			--	--	SPACE	16
17	SPACE	--	--					0	0	--	--	SPACE	18
19	SPACE	--	--	0	0					--	--	SPACE	20
21	SPACE	--	--			0	0			--	--	SPACE	22
23	SPACE	--	--					0	0	--	--	SPACE	24
25	SPACE	--	--	0	0					--	--	SPACE	26
27	SPACE	--	--			0	0			--	--	SPACE	28
29	SPACE	--	--					0	0	--	--	SPACE	30
31	SPACE	--	--	0	0					--	--	SPACE	32
33	SPACE	--	--			0	0			--	--	SPACE	34
35	SPACE	--	--					0	0	--	--	SPACE	36
37	PANEL 0NP3	70	3	1140	0					--	--	SPACE	38
39	--	--	--			1270	0			--	--	SPACE	40
41	--	--	--					960	0	--	--	SPACE	42

	PHASE A	PHASE B	PHASE C
TOTAL LOAD	2.2 kVA	3.2 kVA	2.0 kVA
TOTAL AMPS	19 A	27 A	16 A

LOAD TYPE	CONNECTED LOAD	DEMAND FACTOR	TOTAL LOAD WITH NEC FACTORS
Other	720 VA	100.00%	720 VA
PWR -	4110 VA	100.00%	4110 VA
REC -	2520 VA	100.00%	2520 VA

PANEL TOTALS	
TOTAL CONNECTED LOAD:	7.4 kVA
TOTAL NEC LOAD:	7.4 kVA
TOTAL CONNECTED AMPS:	20 A
TOTAL NEC AMPS:	20 A

NOTES:

0NP3

LOCATION: Space 466 | VOLTS: 120/208 Wye | A.I.C RATING: 1,307
FED FROM: 0NP1. | PHASES: 3 | MAINS TYPE: MAIN LUGS
MOUNTING: SURFACE | WIRES: 4 | RATING: 225 A

CKT #	CIRCUIT DESCRIPTION	AMP	POLE	A		B		C		POLE	AMP	CIRCUIT DESCRIPTION	CKT #
1	REC - PARKING LEVEL P0 NORTH	20	1	180	180					1	20	REC - PARKING LEVEL P4 NORTH	2
3	PWR - PK LVL P0 N. BLUE PHONE & SNOW...	20	1			305	300			1	20	PWR - PARKING LEVEL P4 NORTH BLUE PHONE	4
5	REC - PARKING LEVEL P1 NORTH	20	1					180	180	1	20	REC - PARKING LEVEL P5 NORTH	6
7	PWR - PARKING LEVEL P1 NORTH BLUE PHONE	20	1	300	300					1	20	PWR - PARKING LEVEL P5 NORTH BLUE PHONE	8
9	REC - PARKING LEVEL P2 NORTH	20	1			180	180			1	20	REC - PARKING LEVEL P6 NORTH	10
11	PWR - PARKING LEVEL P2 NORTH BLUE PHONE	20	1					300	300	1	20	PWR - PARKING LEVEL P6 NORTH BLUE PHONE	12
13	REC - PARKING LEVEL P3 NORTH	20	1	180	0					1	20	SPARE	14
15	PWR - PARKING LEVEL P3 NORTH BLUE PHONE	20	1			300	5			1	20	SNOW CHUTE ALARM STROBE	16
17	SPARE	20	1					0	0	1	20	SPARE	18
19	SPARE	20	1	0	0					1	20	SPARE	20
21	SPARE	20	1			0	0			1	20	SPARE	22
23	SPARE	20	1					0	0	1	20	SPARE	24
25	SPACE	--	--	0	0					--	--	SPACE	26
27	SPACE	--	--			0	0			--	--	SPACE	28
29	SPACE	--	--					0	0	--	--	SPACE	30
31	SPACE	--	--	0	0					--	--	SPACE	32
33	SPACE	--	--			0	0			--	--	SPACE	34
35	SPACE	--	--					0	0	--	--	SPACE	36
37	SPACE	--	--	0	0					--	--	SPACE	38
39	SPACE	--	--			0	0			--	--	SPACE	40
41	SPACE	--	--					0	0	--	--	SPACE	42

	PHASE A	PHASE B	PHASE C
TOTAL LOAD	1.1 kVA	1.3 kVA	1.0 kVA
TOTAL AMPS	10 A	11 A	8 A

LOAD TYPE	CONNECTED LOAD	DEMAND FACTOR	TOTAL LOAD WITH NEC FACTORS
PWR -	2110 VA	100.00%	2110 VA
REC -	1260 VA	100.00%	1260 VA

PANEL TOTALS	
TOTAL CONNECTED LOAD:	3.4 kVA
TOTAL NEC LOAD:	3.4 kVA
TOTAL CONNECTED AMPS:	9 A
TOTAL NEC AMPS:	9 A

NOTES:

THESE PROJECT RECORD DOCUMENTS HAVE BEEN MODIFIED TO INCLUDE FIELD MARKUPS PROVIDED BY THE CONTRACTOR. AMC ENGINEERS HAS NOT FIELD VERIFIED THIS INFORMATION AND DOES NOT CERTIFY THE COMPLETENESS AND/OR ACCURACY OF THESE DOCUMENTS.
BY: ASJ
C 15334

NEESER CONSTRUCTION, INC.
AMC ENGINEERS
Adams, Morgenthaler & Co., Inc.
CoA No. C0342 - 907.257.9100
701 E. Tudor Rd. Suite 250
Anchorage, AK 99503
www.amc-engineers.com

Childrens Dental Clinic Building
4441 Diplomacy Drive, Anchorage AK 99508
Southcentral Foundation

No.	Description	Date

Drawn By: ERP/MPL | Checked By: ASJ
Date: 24 DEC 2018
Phase: RECORD DRAWINGS
Job No: 21519.00
SHEET TITLE: PANEL SCHEDULES
SHEET NO: EP102

0EH1

LOCATION: ELEC / COMM P011
FED FROM: ATS-E
MOUNTING: SURFACE
VOLTS: 480/277 Wye
PHASES: 3
WIRES: 4
A.I.C RATING: 7,992
MAINS TYPE: MLO
RATING: 125 A

CKT #	CIRCUIT DESCRIPTION	AMP	POLE	A		B		C		POLE	AMP	CIRCUIT DESCRIPTION	CKT #
1	LTG - GENERATOR P010	20	1	416	3289					1	20	LTG - EMERGENCY - LEVEL P0 & LEVEL P1	2
3	LTG - N.E. PARKING STRUCTURE STAIRWELL	20	1			816	3122			1	20	LTG - EMERGENCY - LEVEL P2 & LEVEL P3	4
5	LTG - EMERGENCY - GARAGE SOUTH STAIRWELL	20	1					2043	3219	1	20	LTG - EMERGENCY - LEVEL P4 & LEVEL P5	6
7	SPARE	20	1	0	1333					1	20	LTG - EMERGENCY - LEVEL P6 & LEVEL P7	8
9	SPARE	20	1			0	0			1	20	SPARE	10
11	SPARE	20	1					0	0	1	20	SPARE	12
13	SPARE	20	1	0	0					1	20	SPARE	14
15	SPARE	20	1			0	0			1	20	SPARE	16
17	SPACE	--	--					0	0	--	--	SPACE	18
19	SPACE	--	--	0	0					--	--	SPACE	20
21	SPACE	--	--			0	0			--	--	SPACE	22
23	SPACE	--	--					0	0	--	--	SPACE	24
25	SPACE	--	--	0	0					--	--	SPACE	26
27	SPACE	--	--			0	0			--	--	SPACE	28
29	SPACE	--	--					0	0	--	--	SPACE	30

	PHASE A	PHASE B	PHASE C
TOTAL LOAD	5.0 kVA	3.9 kVA	5.3 kVA
TOTAL AMPS	19 A	14 A	20 A

LOAD TYPE	CONNECTED LOAD	DEMAND FACTOR	TOTAL LOAD WITH NEC FACTORS
LTG -	14327 VA	125.00%	17909 VA
PWR -	0 VA	0.00%	0 VA

PANEL TOTALS	
TOTAL CONNECTED LOAD:	14.3 kVA
TOTAL NEC LOAD:	17.9 kVA
TOTAL CONNECTED AMPS:	17 A
TOTAL NEC AMPS:	22 A

NOTES:

0UP1

LOCATION: ELEC / COMM P011
FED FROM: 0UPA
MOUNTING: Surface
VOLTS: 120/208 Wye
PHASES: 3
WIRES: 4
A.I.C RATING: 5,633
MAINS TYPE: MAIN LUGS
RATING: 225 A

CKT #	CIRCUIT DESCRIPTION	AMP	POLE	A		B		C		POLE	AMP	CIRCUIT DESCRIPTION	CKT #
1	REC - ELEC / COMM P011 - N. WALL	20	1	360	0					1	20	CCTV NETWORK SWITCH - LEVEL P1 SOUTHEAST	2
3	REC - ELEC / COMM P011 - TELECOM RACK #1	20	1			360							4
5	REC - ELEC / COMM P011 - TELECOM RACK #1	20	1					360	180	1	20	CCTV NETWORK SWITCH - LEVEL P1 NORTHWEST	6
7	SPARE	20	1	0	180					1	20	CCTV NETWORK SWITCH - LEVEL P3 NORTHWEST	8
9	SPARE	20	1			0	0			1	20	SPARE	10
11	SPARE	20	1					0	0	1	20	SPARE	12
13	SPARE	20	1	0	0					1	20	SPARE	14
15	SPARE	20	1			0	0			1	20	SPARE	16
17	SPARE	20	1					0	0	1	20	SPARE	18
19	SPACE	--	--	0	0					--	--	SPACE	20
21	SPACE	--	--			0	0			--	--	SPACE	22
23	SPACE	--	--					0	0	--	--	SPACE	24
25	SPACE	--	--	0	0					--	--	SPACE	26
27	SPACE	--	--			0	0			--	--	SPACE	28
29	SPACE	--	--					0	0	--	--	SPACE	30

	PHASE A	PHASE B	PHASE C
TOTAL LOAD	0.5 kVA	0.4 kVA	0.5 kVA
TOTAL AMPS	5 A	3 A	5 A

LOAD TYPE	CONNECTED LOAD	DEMAND FACTOR	TOTAL LOAD WITH NEC FACTORS
Other	360 VA	100.00%	360 VA
PWR -	360 VA	100.00%	360 VA
REC -	720 VA	100.00%	720 VA

PANEL TOTALS	
TOTAL CONNECTED LOAD:	1.4 kVA
TOTAL NEC LOAD:	1.4 kVA
TOTAL CONNECTED AMPS:	4 A
TOTAL NEC AMPS:	4 A

NOTES:

THESE PROJECT RECORD DOCUMENTS HAVE BEEN MODIFIED TO INCLUDE FIELD MARKUPS PROVIDED BY THE CONTRACTOR. AMC ENGINEERS HAS NOT FIELD VERIFIED THIS INFORMATION AND DOES NOT CERTIFY THE COMPLETENESS AND/OR ACCURACY OF THESE DOCUMENTS.

BY: ASJ

© 15334

NEESE CONSTRUCTION, INC.
Adams, Morgenthaler & Co., Inc.
DBA: AMC ENGINEERS
701 E. Tudor Rd. Suite 230
Anchorage, AK 99503
www.amc-engineers.com
AMC ENGINEERS

Childrens Dental Clinic Building

4441 Diplomacy Drive, Anchorage AK 99508
Southcentral Foundation

No.	Description	Date

Drawn By: Author
Checked By: Checker
Date: 24 DEC 2018
Phase: RECORD DRAWINGS
Job No: 21519.00
SHEET TITLE: PANEL SCHEDULES

SHEET NO:

EP103

C:\Users\ERP AMC\ARCH\Documents\SCF CDCB - MEP_ERP.rvt
12/21/2018 1:33:39 PM

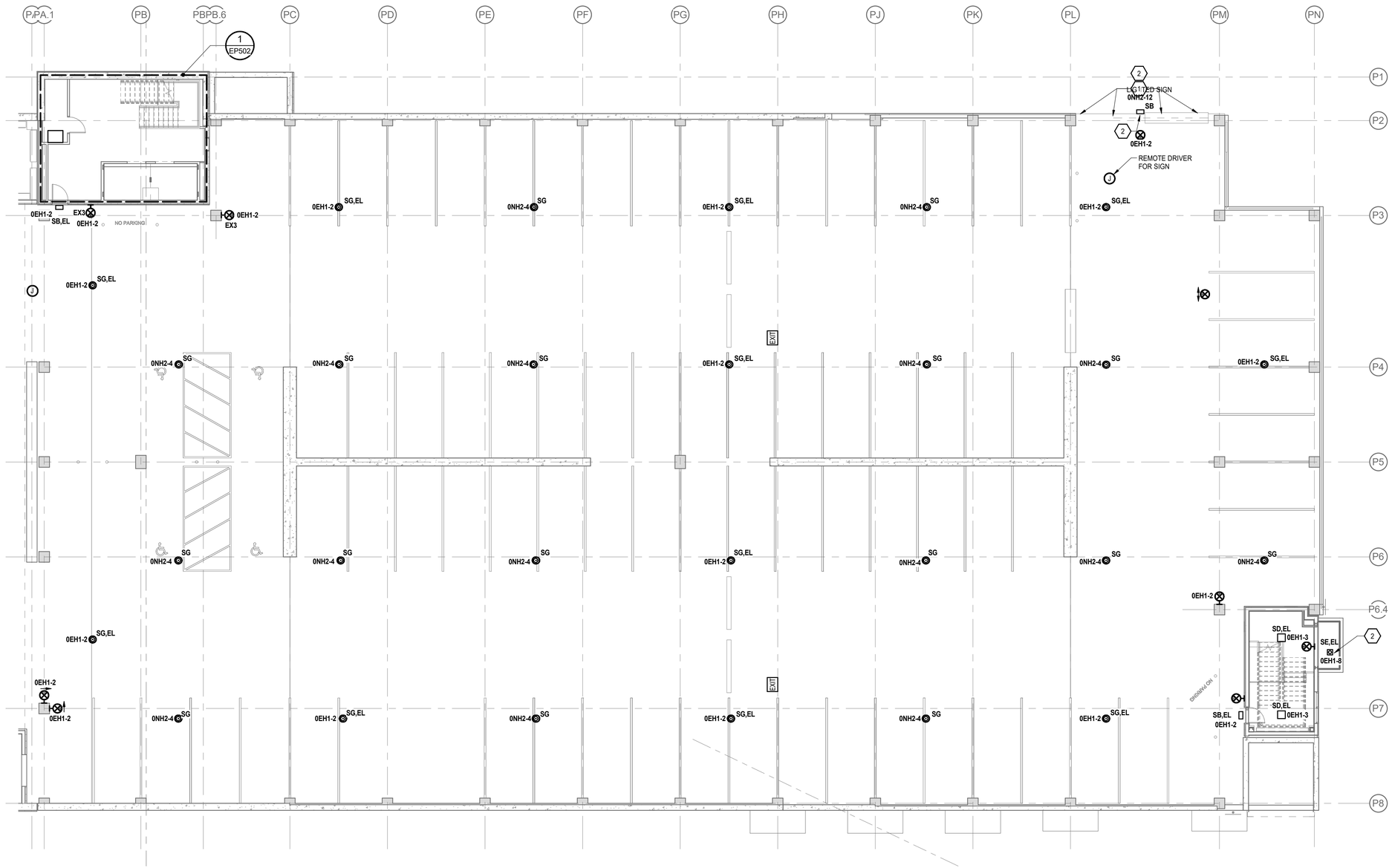

1 EP200 **FLOOR PLAN - LIGHTING - LEVEL PB**

Scale: 3/32" = 1'-0"

GENERAL NOTES

1. REFER TO ENLARGED PLANS DETAIL 1/EP502 AND SHEET E510 FOR LOCATIONS OF NORMAL AND EMERGENCY LIGHTING PANELS.
2. CONNECT NORMAL LIGHTING TO PANEL ONH2 LOCATED IN ELEC ROOM P050, CIRCUIT AS NOTED.
3. CONNECT EMERGENCY LIGHTING TO PANEL OEH1 LOCATED IN ELEC/COMM ROOM P011, CIRCUIT AS NOTED.

SHEET NOTES

1. PROVIDE FOUR (4) TYPE SK FIXTURES FOR LIGHTING WAYFINDING ENTRANCE SIGN AT THIS APPROXIMATE LOCATION. CONNECT TO CIRCUIT 0NH2-16. COORDINATE EXACT LOCATIONS WITH FINAL SIGNAGE LAYOUT.
2. PROVIDE CONTROL OF LIGHTING FIXTURE(S) INDICATED VIA PARKING GARAGE PHOTOCELL RELAY LOCATED IN ELEC ROOM P050. REFER TO DETAIL 1/EP502 FOR ADDITIONAL INFORMATION.

SCALE: 3/32" = 1' - 0"

0' 5'-4" 10'-8" 21'-4" 42'-8"

THESE PROJECT RECORD DOCUMENTS HAVE BEEN MODIFIED TO INCLUDE FIELD MARKUPS PROVIDED BY THE CONTRACTOR. AMC ENGINEERS HAS NOT FIELD VERIFIED THIS INFORMATION AND DOES NOT CERTIFY THE COMPLETENESS AND/OR ACCURACY OF THESE DOCUMENTS.

BY: ASJ

© 15334

NEESER CONSTRUCTION, INC.

AMC ENGINEERS

Adams, Morgenthaler & Co., Inc.
Co.A No. C0342 - 907.257.9100
701 E. Tudor Rd. Suite 250
Anchorage, AK 99503
www.amc-engineers.com

Childrens Dental Clinic Building

4441 Diplomacy Drive, Anchorage AK 99508

Southcentral Foundation

No.	Description	Date

Drawn By: ERP/MPL

Checked By: ASJ

Date: 24 DEC 2018

Phase: RECORD DRAWINGS

Job No: 21519.00

SHEET TITLE: FLOOR PLAN - LIGHTING - LEVEL PB

SHEET NO: EP200

C:\Users\ERP-AMC-ANCH\Documents\SCF CDCB - MEP_ERP.rvt

12/21/2018 1:34:07 PM

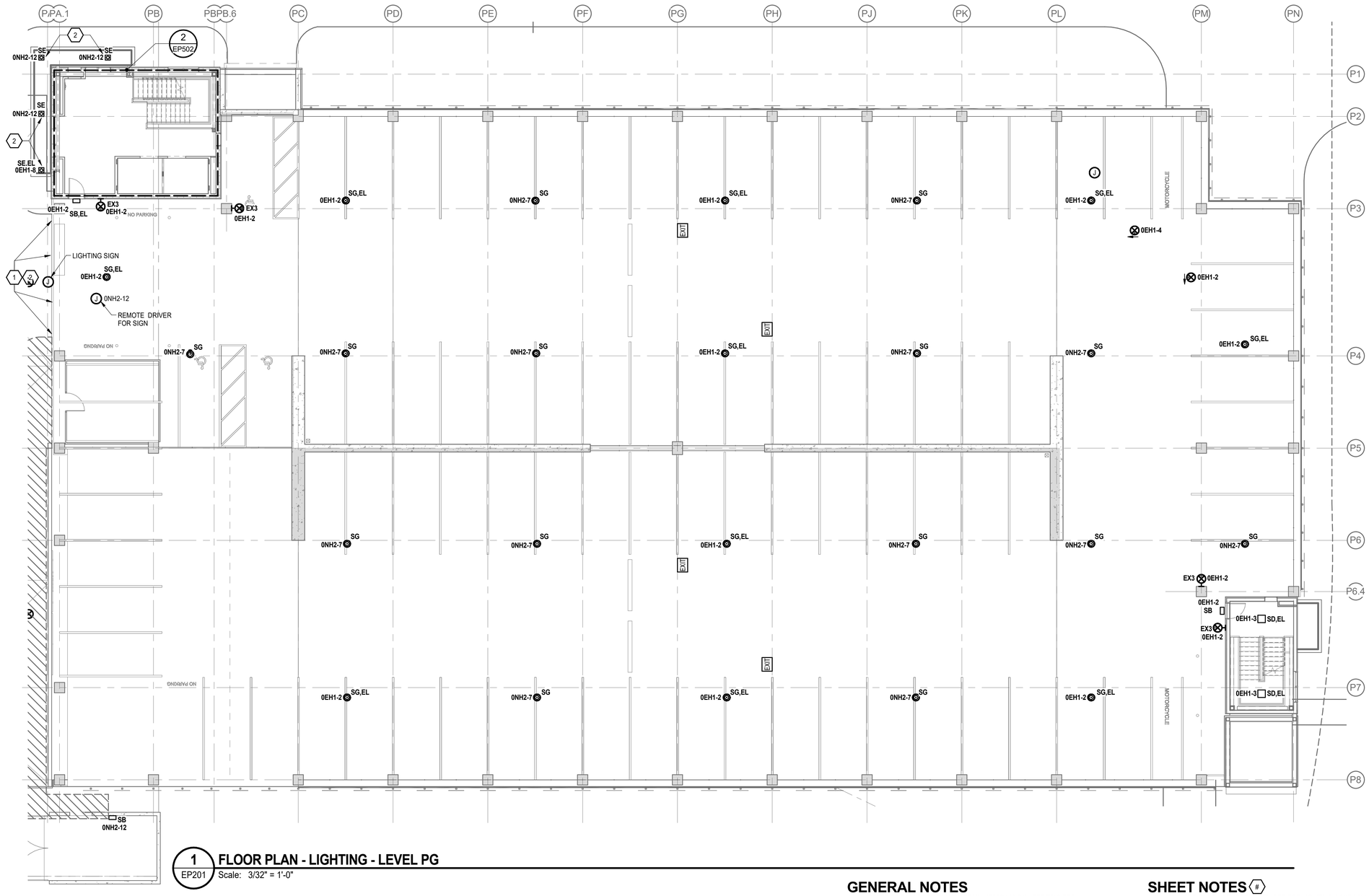

1 EP201 **FLOOR PLAN - LIGHTING - LEVEL PG**
Scale: 3/32" = 1'-0"

GENERAL NOTES

1. REFER TO ENLARGED PLANS DETAIL 1/EP502 AND SHEET E510 FOR LOCATIONS OF NORMAL AND EMERGENCY LIGHTING PANELS.
2. CONNECT NORMAL LIGHTING TO PANEL ONH2 LOCATED IN ELEC ROOM P050, CIRCUIT AS NOTED.
3. CONNECT EMERGENCY LIGHTING TO PANEL OEH1 LOCATED IN ELEC/COMM ROOM P011, CIRCUIT AS NOTED.

SHEET NOTES

1. PROVIDE FOUR (4) TYPE SK FIXTURES FOR LIGHTING WAYFINDING ENTRANCE SIGN AT THIS APPROXIMATE LOCATION. CONNECT TO CIRCUIT 0NH2-16. COORDINATE EXACT LOCATIONS WITH FINAL SIGNAGE LAYOUT.
2. PROVIDE CONTROL OF LIGHTING FIXTURE(S) INDICATED VIA PARKING GARAGE PHOTOCELL RELAY LOCATED IN ELEC ROOM P050. REFER TO DETAIL 1/EP502 FOR ADDITIONAL INFORMATION.

SCALE: 3/32" = 1' - 0"
0' 5'-4" 10'-8" 21'-4" 42'-8"

THESE PROJECT RECORD DOCUMENTS HAVE BEEN MODIFIED TO INCLUDE FIELD MARKUPS PROVIDED BY THE CONTRACTOR. AMC ENGINEERS HAS NOT FIELD VERIFIED THIS INFORMATION AND DOES NOT CERTIFY THE COMPLETENESS AND/OR ACCURACY OF THESE DOCUMENTS.

BY: ASJ

© 15334

NEESER CONSTRUCTION, INC.

Adams, Morgenthaler & Co., Inc.
Co.A No. C0342 - 907.237.9190
701 E. Tudor Rd. Suite 250
Anchorage, AK 99503
www.amc-engineers.com

AMC ENGINEERS

Childrens Dental Clinic Building

4441 Diplomacy Drive, Anchorage AK 99508

Southcentral Foundation

No.	Description	Date

Drawn By: ERP/MPL
Checked By: ASJ
Date: 24 DEC 2018
Phase: RECORD DRAWINGS
Job No: 21519.00
SHEET TITLE: FLOOR PLAN - LIGHTING - LEVEL PG

SHEET NO:

EP201

C:\Users\ERP\AMC-ANCH\Documents\SCF CDCB - MEP_ERP.rvt
12/21/2018 1:34:15 PM

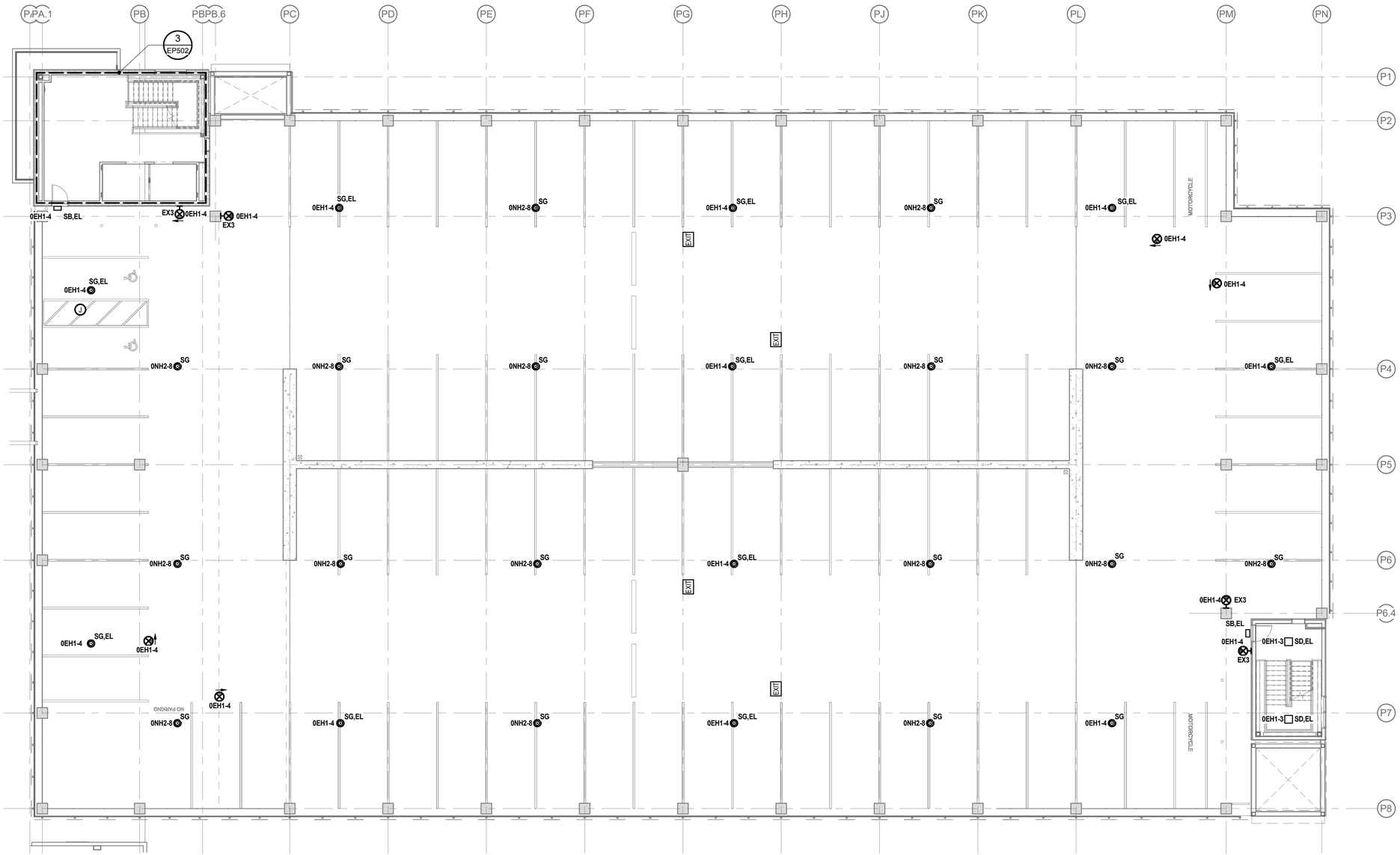

1 EP202 **FLOOR PLAN - LIGHTING - LEVEL P1**
Scale: 3/32" = 1'-0"

GENERAL NOTES

1. REFER TO ENLARGED PLANS DETAIL 1/EP502 AND SHEET E510 FOR LOCATIONS OF NORMAL AND EMERGENCY LIGHTING PANELS.
2. CONNECT NORMAL LIGHTING TO PANEL ONH2 LOCATED IN ELEC ROOM P050, CIRCUIT AS NOTED.
3. CONNECT EMERGENCY LIGHTING TO PANEL OEH1 LOCATED IN ELEC/COMM ROOM P011, CIRCUIT AS NOTED.

SCALE: 3/32" = 1' - 0"
0' 5'-4" 10'-8" 21'-4" 42'-8"

THESE PROJECT RECORD DOCUMENTS HAVE BEEN MODIFIED TO INCLUDE FIELD MARKUPS PROVIDED BY THE CONTRACTOR. AMC ENGINEERS HAS NOT FIELD VERIFIED THIS INFORMATION AND DOES NOT CERTIFY THE COMPLETENESS AND/OR ACCURACY OF THESE DOCUMENTS.

BY: ASJ

© 15334

NEESER CONSTRUCTION, INC.

Adams, Morgenthaler & Co., Inc.
Co.A No. C0042 - 907.27.9100
701 E. Tudor Rd. Suite 250
Anchorage, AK 99503
www.amc-engineers.com

AMC ENGINEERS

Childrens Dental Clinic Building

4441 Diplomacy Drive, Anchorage AK 99508

Southcentral Foundation

No.	Description	Date

Drawn By: ERP/MPL
Checked By: ASJ
Date: 24 DEC 2018
Phase: RECORD DRAWINGS
Job No: 21519.00
SHEET TITLE: FLOOR PLAN - LIGHTING - LEVEL P1

SHEET NO:

EP202

C:\Users\ERP\AMC-ANCH\Documents\SCF CDCB - MEP_ERP.rvt
12/21/2018 1:34:23 PM

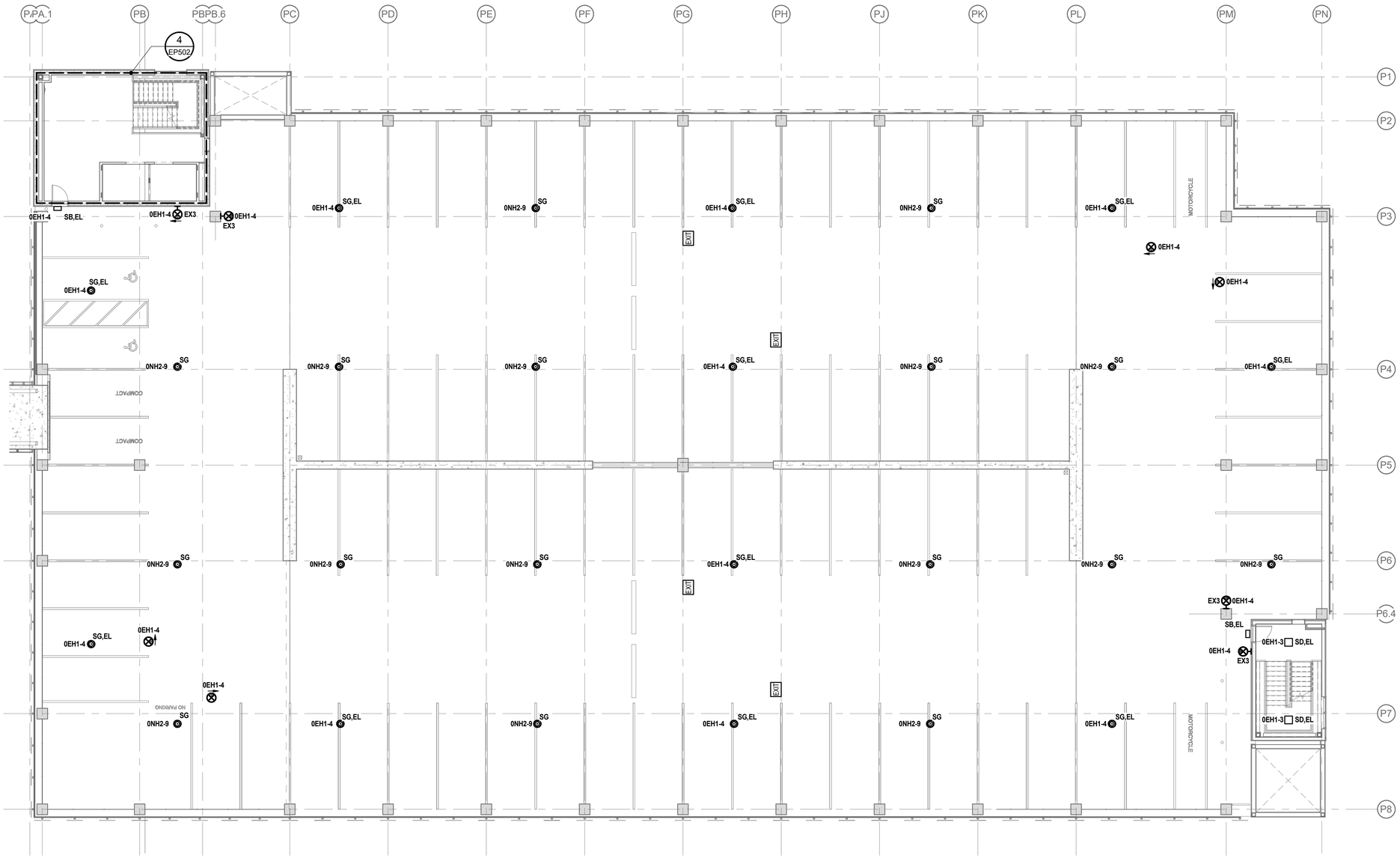

1 EP203 **FLOOR PLAN - LIGHTING - LEVEL P2**
Scale: 3/32" = 1'-0"

GENERAL NOTES

1. REFER TO ENLARGED PLANS DETAIL 1/EP502 AND SHEET E510 FOR LOCATIONS OF NORMAL AND EMERGENCY LIGHTING PANELS.
2. CONNECT NORMAL LIGHTING TO PANEL ONH2 LOCATED IN ELEC ROOM P050, CIRCUIT AS NOTED.
3. CONNECT EMERGENCY LIGHTING TO PANEL OEH1 LOCATED IN ELEC/COMM ROOM P011, CIRCUIT AS NOTED.

SCALE: 3/32" = 1' - 0"
0' 5'-4" 10'-8" 21'-4" 42'-8"

THESE PROJECT RECORD DOCUMENTS HAVE BEEN MODIFIED TO INCLUDE FIELD MARKUPS PROVIDED BY THE CONTRACTOR. AMC ENGINEERS HAS NOT FIELD VERIFIED THIS INFORMATION AND DOES NOT CERTIFY THE COMPLETENESS AND/OR ACCURACY OF THESE DOCUMENTS.

BY: ASJ

© 15334

NEESER CONSTRUCTION, INC.

AMC ENGINEERS
Adams, Morgenthaler & Co., Inc.
Co.A No. C0342 - 907.267.9100
701 E. Tudor Rd. Suite 250
Anchorage, AK 99503
www.amc-engineers.com

Childrens Dental Clinic Building

4441 Diplomacy Drive, Anchorage AK 99508

Southcentral Foundation

No.	Description	Date

Drawn By: ERP/MPL
Checked By: ASJ
Date: 24 DEC 2018
Phase: RECORD DRAWINGS
Job No: 21519.00
SHEET TITLE: FLOOR PLAN - LIGHTING - LEVEL P2

SHEET NO:
EP203

C:\Users\ERP\AMC-ANCH\Documents\SCF CDCB - MEP_ERP.rvt
12/21/2018 1:34:32 PM

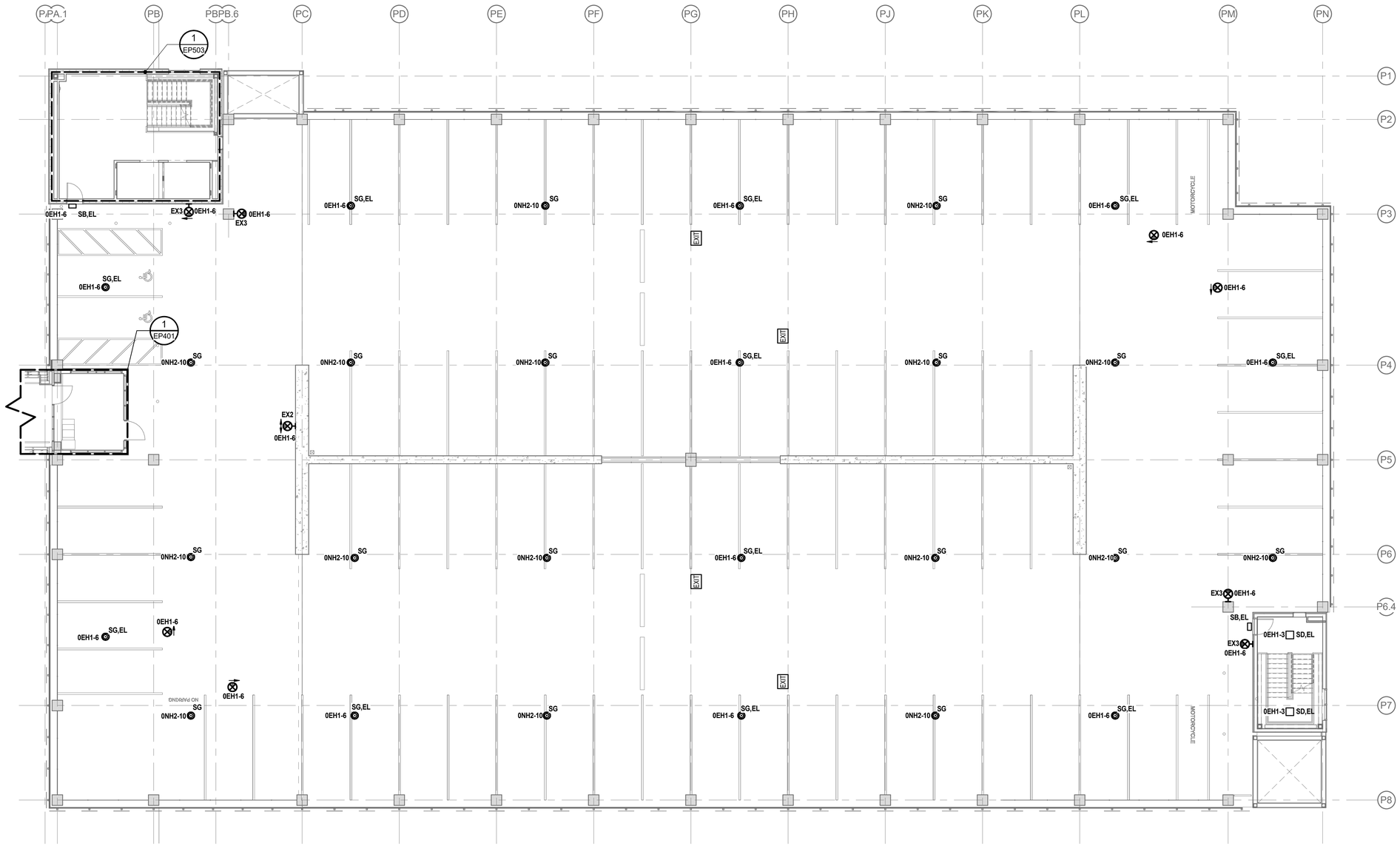

1 EP204 **FLOOR PLAN - LIGHTING - LEVEL P3**
Scale: 3/32" = 1'-0"

GENERAL NOTES

1. REFER TO ENLARGED PLANS DETAIL 1/EP502 AND SHEET E510 FOR LOCATIONS OF NORMAL AND EMERGENCY LIGHTING PANELS.
2. CONNECT NORMAL LIGHTING TO PANEL ONH2 LOCATED IN ELEC ROOM P050, CIRCUIT AS NOTED.
3. CONNECT EMERGENCY LIGHTING TO PANEL OEH1 LOCATED IN ELEC/COMM ROOM P011, CIRCUIT AS NOTED.

SCALE: 3/32" = 1' - 0"
0' 5'-4" 10'-8" 21'-4" 42'-8"

THESE PROJECT RECORD DOCUMENTS HAVE BEEN MODIFIED TO INCLUDE FIELD MARKUPS PROVIDED BY THE CONTRACTOR. AMC ENGINEERS HAS NOT FIELD VERIFIED THIS INFORMATION AND DOES NOT CERTIFY THE COMPLETENESS AND/OR ACCURACY OF THESE DOCUMENTS.

BY: ASJ

© 15334

NEESER CONSTRUCTION, INC.

AMC ENGINEERS
Adams, Morgenthaler & Co., Inc.
Co.A No. C0342 - 907.257.9190
701 E. Tudor Rd. Suite 250
Anchorage, AK 99503
www.amc-engineers.com

Childrens Dental Clinic Building

4441 Diplomacy Drive, Anchorage AK 99508
Southcentral Foundation

No.	Description	Date

Drawn By: ERP/MPL
Checked By: ASJ
Date: 24 DEC 2018
Phase: RECORD DRAWINGS
Job No: 21519.00
SHEET TITLE: FLOOR PLAN - LIGHTING - LEVEL P3

SHEET NO:
EP204

C:\Users\ERP\AMC-ANCH\Documents\SCF CDCB - MEP_ERP.rvt
12/21/2018 1:34:41 PM

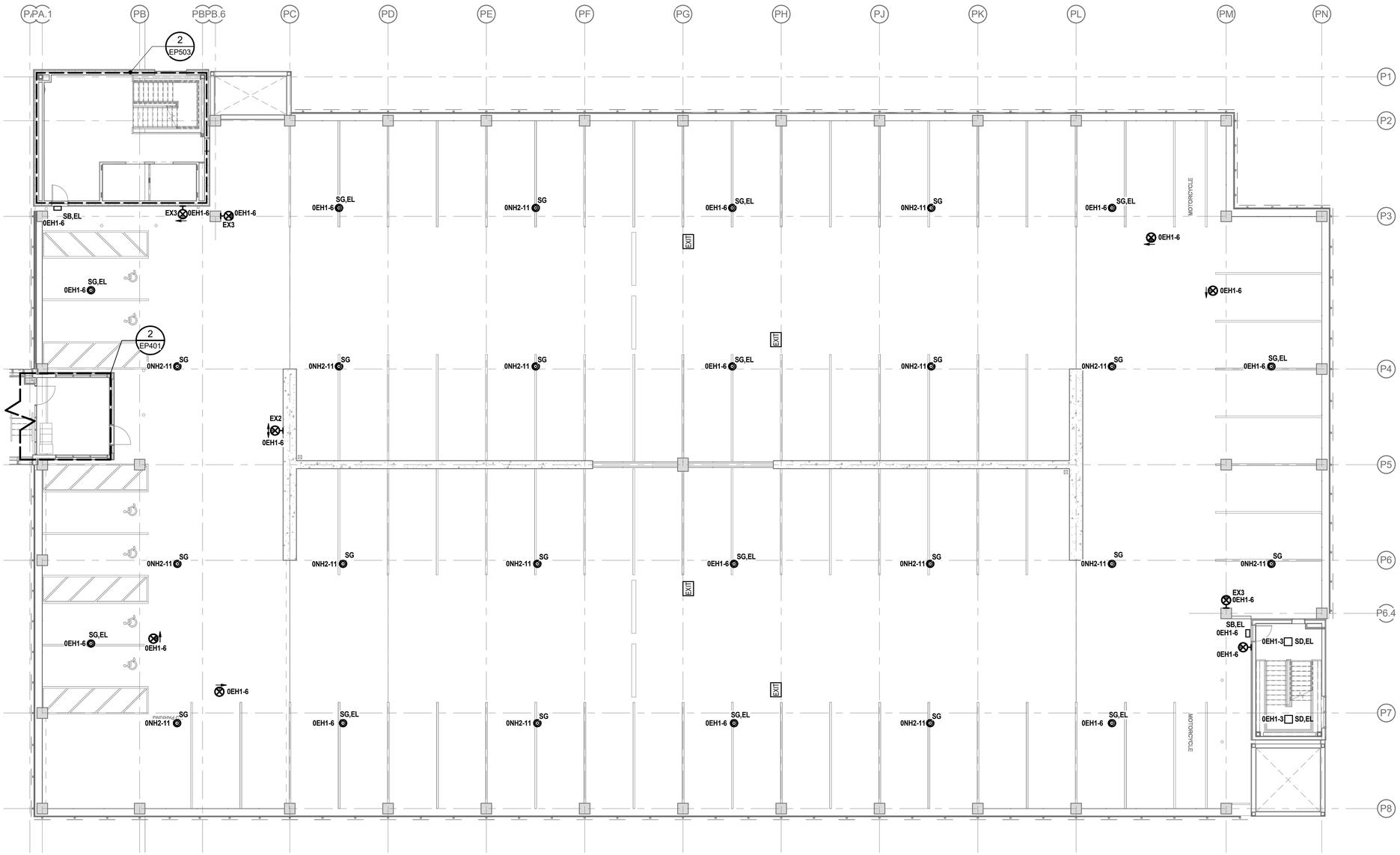

1 EP205 **FLOOR PLAN - LIGHTING - LEVEL P4**
Scale: 3/32" = 1'-0"

GENERAL NOTES

1. REFER TO ENLARGED PLANS DETAIL 1/EP502 AND SHEET E510 FOR LOCATIONS OF NORMAL AND EMERGENCY LIGHTING PANELS.
2. CONNECT NORMAL LIGHTING TO PANEL ONH2 LOCATED IN ELEC ROOM P050, CIRCUIT AS NOTED.
3. CONNECT EMERGENCY LIGHTING TO PANEL OEH1 LOCATED IN ELEC/COMM ROOM P011, CIRCUIT AS NOTED.

SCALE: 3/32" = 1' - 0"
0' 5'-4" 10'-8" 21'-4" 42'-8"

THESE PROJECT RECORD DOCUMENTS HAVE BEEN MODIFIED TO INCLUDE FIELD MARKUPS PROVIDED BY THE CONTRACTOR. AMC ENGINEERS HAS NOT FIELD VERIFIED THIS INFORMATION AND DOES NOT CERTIFY THE COMPLETENESS AND/OR ACCURACY OF THESE DOCUMENTS.

BY: ASJ

© 15334

NEESER CONSTRUCTION, INC.

Adams, Morgenthaler & Co., Inc.
Co.A No. C0342 - 907.267.9100
701 E. Tudor Rd. Suite 250
Anchorage, AK 99503
www.amc-engineers.com

AMC ENGINEERS

Childrens Dental Clinic Building

4441 Diplomacy Drive, Anchorage AK 99508

Southcentral Foundation

No.	Description	Date

Drawn By: ERP/MPL
Checked By: ASJ
Date: 24 DEC 2018
Phase: RECORD DRAWINGS
Job No: 21519.00
SHEET TITLE: FLOOR PLAN - LIGHTING - LEVEL P4

SHEET NO:

EP205

C:\Users\ERP\AMC-ANCH\Documents\SCF CDCB - MEP_ERP.rvt
12/21/2018 1:34:51 PM

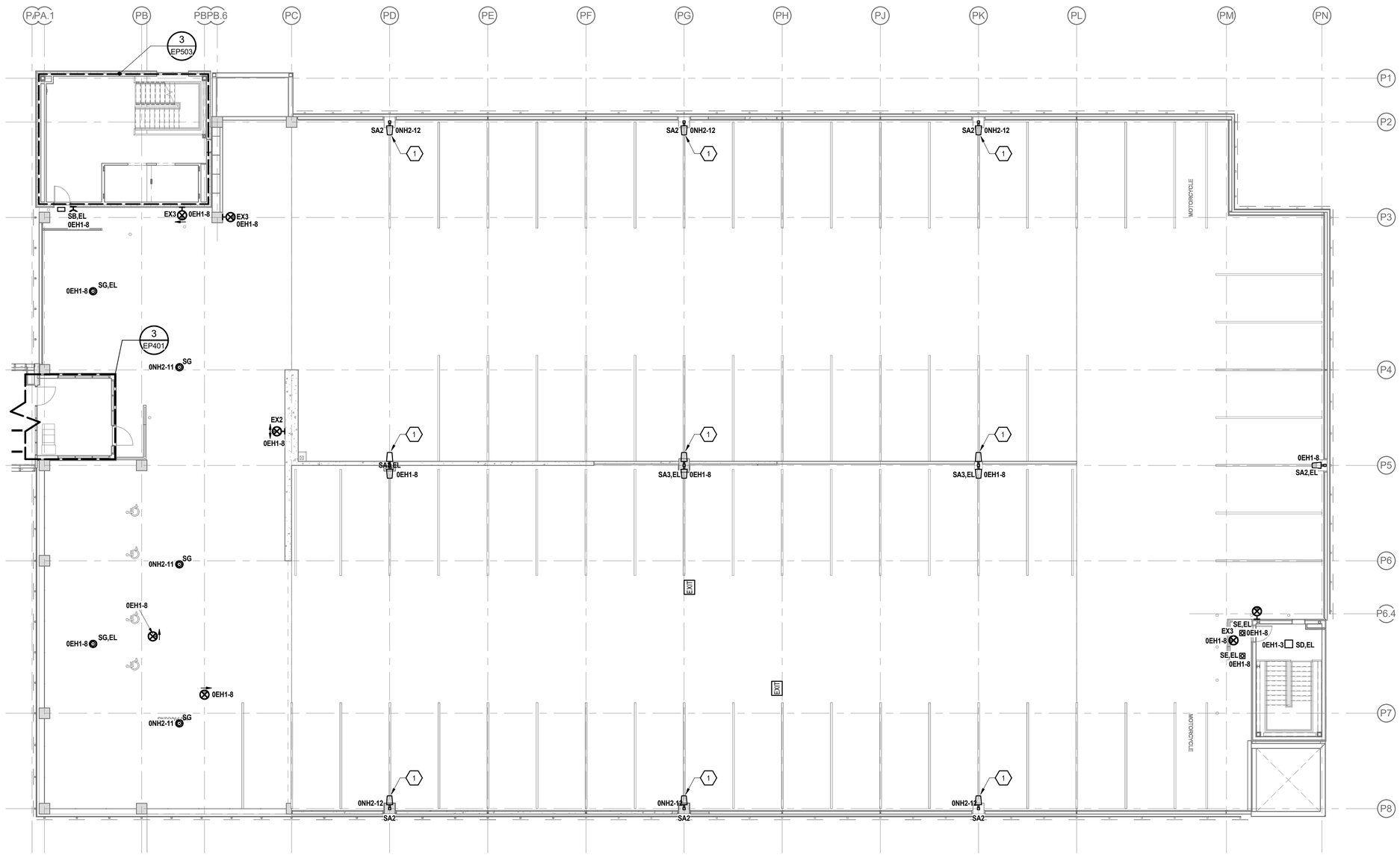

1 EP206 FLOOR PLAN - LIGHTING - LEVEL P5

SCALE: 3/32" = 1'-0"

GENERAL NOTES

1. REFER TO ENLARGED PLANS DETAIL 1/EP502 AND SHEET E510 FOR LOCATIONS OF NORMAL AND EMERGENCY LIGHTING PANELS.
2. CONNECT NORMAL LIGHTING TO PANEL ONH2 LOCATED IN ELEC ROOM P050, CIRCUIT AS NOTED.
3. CONNECT EMERGENCY LIGHTING TO PANEL OEH1 LOCATED IN ELEC/COMM ROOM P011, CIRCUIT AS NOTED.

SHEET NOTES

1. PROVIDE CONTROL OF LIGHTING FIXTURE(S) INDICATED VIA PARKING GARAGE PHOTOCELL RELAY LOCATED IN ELEC ROOM P050. REFER TO DETAIL 1/EP502 FOR ADDITIONAL INFORMATION.

SCALE: 3/32" = 1' - 0"

0' 5'-4" 10'-8" 21'-4" 42'-8"

THESE PROJECT RECORD DOCUMENTS HAVE BEEN MODIFIED TO INCLUDE FIELD MARKUPS PROVIDED BY THE CONTRACTOR. AMC ENGINEERS HAS NOT FIELD VERIFIED THIS INFORMATION AND DOES NOT CERTIFY THE COMPLETENESS AND/OR ACCURACY OF THESE DOCUMENTS.

BY: ASJ

© 15334

NEESER CONSTRUCTION, INC.

AMC ENGINEERS

Adams, Morgenthaler & Co., Inc.
CoA No. C0342 - 907.257.9190
701 E. Tudor Rd. Suite 250
Anchorage, AK 99503
www.amc-engineers.com

Childrens Dental Clinic Building

4441 Diplomacy Drive, Anchorage AK 99508

Southcentral Foundation

No.	Description	Date

Drawn By: ERP/MPL

Checked By: ASJ

Date: 24 DEC 2018

Phase: RECORD DRAWINGS

Job No: 21519.00

SHEET TITLE: FLOOR PLAN - LIGHTING - LEVEL P5

SHEET NO: EP206

C:\Users\ERP\AMC-ANCH\Documents\SCF CDCB - MEP_ERP.rvt

12/21/2018 1:34:55 PM

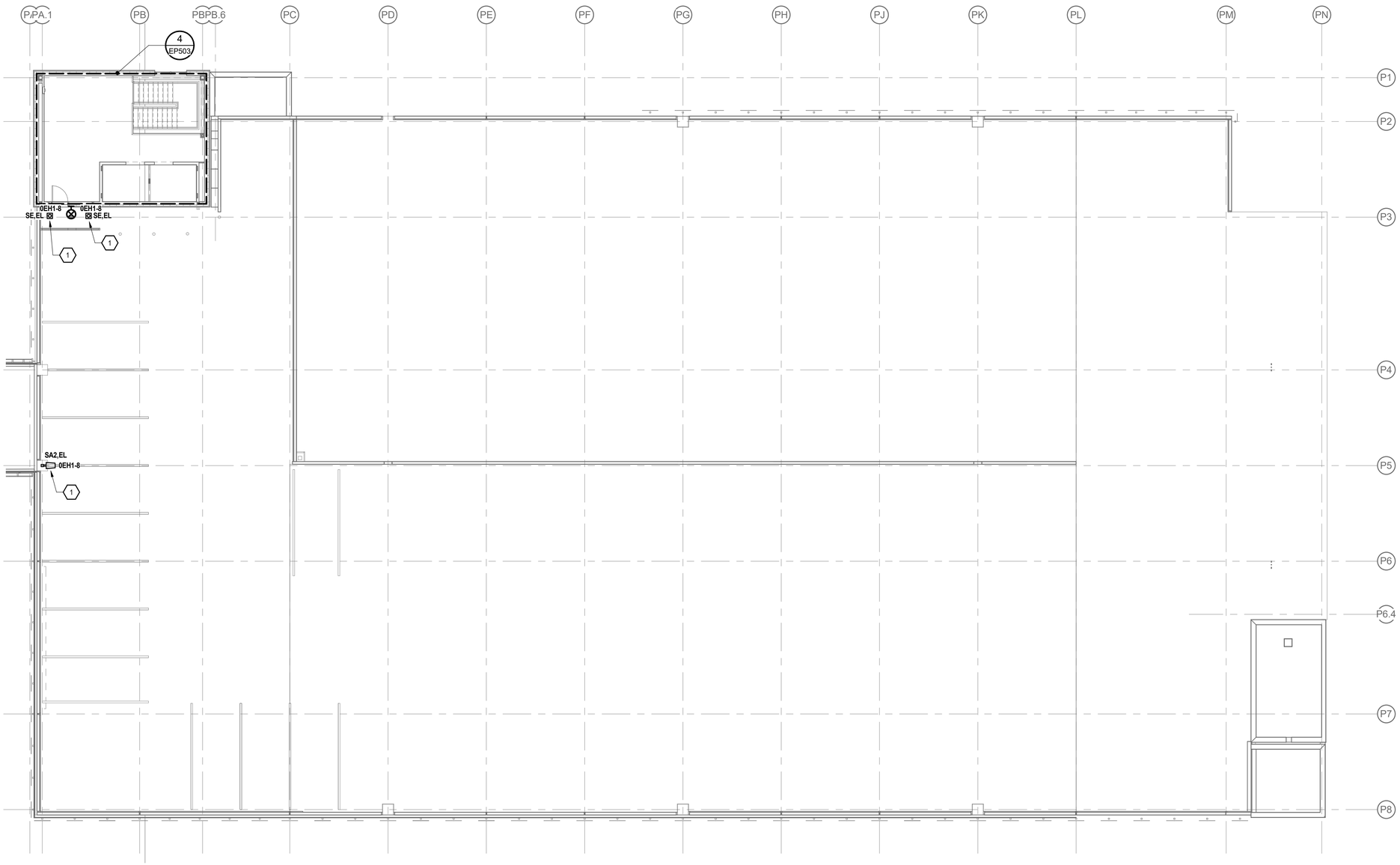

1 FLOOR PLAN - LIGHTING - LEVEL P6

EP207 Scale: 3/32" = 1'-0"

GENERAL NOTES

1. REFER TO ENLARGED PLANS DETAIL 1/EP502 AND SHEET E510 FOR LOCATIONS OF NORMAL AND EMERGENCY LIGHTING PANELS.
2. CONNECT NORMAL LIGHTING TO PANEL ONH2 LOCATED IN ELEC ROOM P050, CIRCUIT AS NOTED.
3. CONNECT EMERGENCY LIGHTING TO PANEL OEH1 LOCATED IN ELEC/COMM ROOM P011, CIRCUIT AS NOTED.

SHEET NOTES (#)

1. PROVIDE CONTROL OF LIGHTING FIXTURE(S) INDICATED VIA PARKING GARAGE PHOTOCELL RELAY LOCATED IN ELEC ROOM P050. REFER TO DETAIL 1/EP502 FOR ADDITIONAL INFORMATION.

SCALE: 3/32" = 1' - 0"

0" 5'-4" 10'-8" 21'-4" 42'-8"

THESE PROJECT RECORD DOCUMENTS HAVE BEEN MODIFIED TO INCLUDE FIELD MARKUPS PROVIDED BY THE CONTRACTOR. AMC ENGINEERS HAS NOT FIELD VERIFIED THIS INFORMATION AND DOES NOT CERTIFY THE COMPLETENESS AND/OR ACCURACY OF THESE DOCUMENTS.

BY: ASJ

© 15334

NEESE CONSTRUCTION, INC.

Adams, Mongermann & Co., Inc.
Civil Mechanical Electrical
701 E. Tudor Rd. Suite 230
Anchorage, AK 99503
www.amc-engineers.com
AMC ENGINEERS

Childrens Dental Clinic Building

4441 Diplomacy Drive, Anchorage AK 99508

Southcentral Foundation

No.	Description	Date

Drawn By: Author
Checked By: Checker
Date: 24 DEC 2018
Phase: RECORD DRAWINGS
Job No: 21519.00
SHEET TITLE: FLOOR PLAN - LIGHTING - LEVEL P6
SHEET NO: EP207

C:\Users\ERP AMC-ARCH\Documents\SCF CDCB - ABP_ERP.rvt
12/27/2018 1:34:58 PM

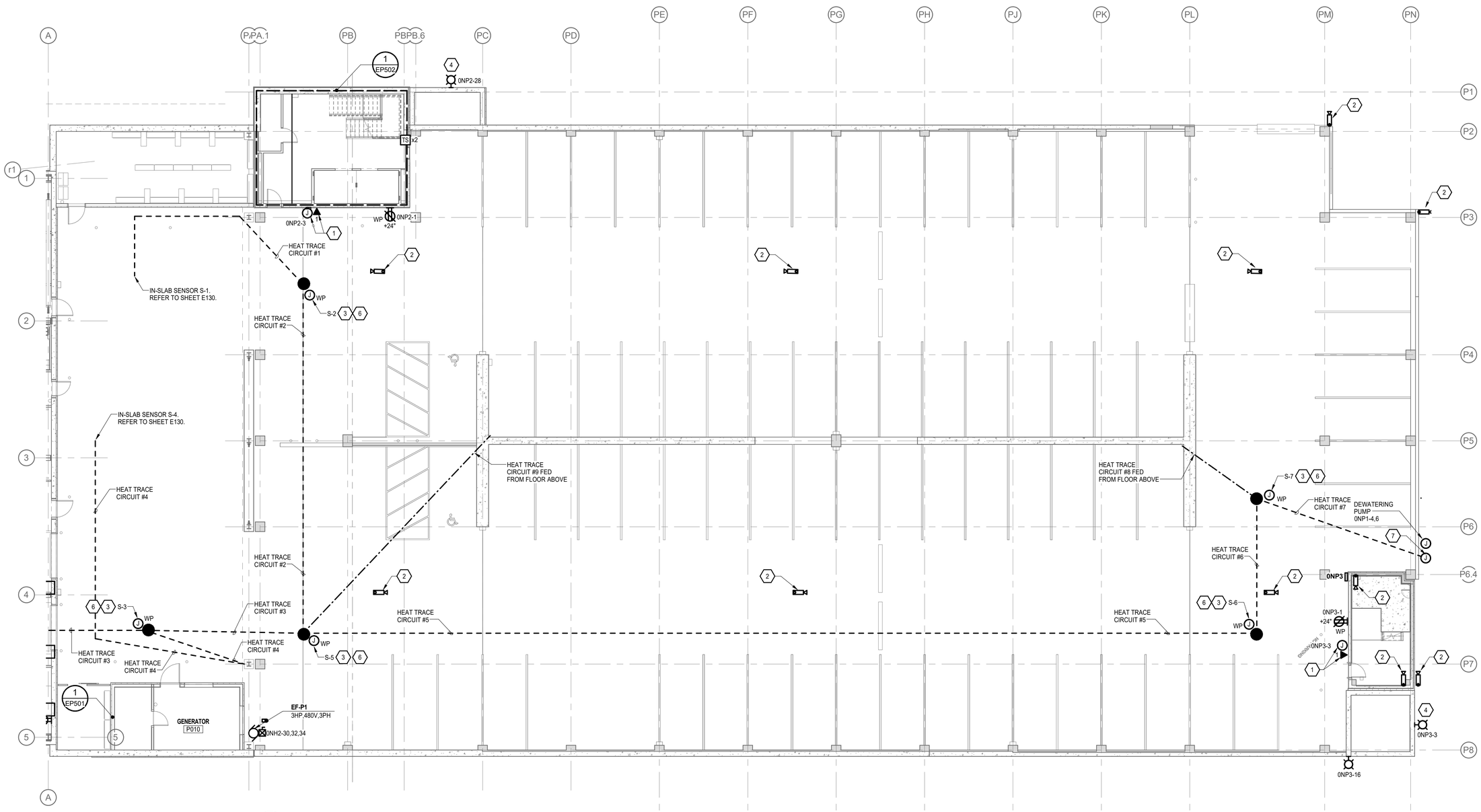

1 FLOOR PLAN - POWER & SPECIAL SYSTEMS - LEVEL PB

EP300 Scale: 3/32" = 1'-0"

SHEET NOTES (#)

1. PROVIDE POWER AND DATA CONNECTION FOR BLUE PHONE.
2. PROVIDE ROUGH IN FOR FUTURE CAMERA.
3. PROVIDE MOISTURE SENSOR IN MANHOLE AT LOCATION OF OUTLET AND CONNECT TO HEAT TRACE CONTROL PANEL(S). REFER TO DETAIL 1 SHEET EP502 FOR LOCATION OF HEAT TRACE CONTROL PANEL(S).
4. PROVIDE STROBE AND DOOR CONTACT. CONNECT STROBE TO SNOW CHUTE DOOR CONTACT SUCH THAT STROBE FLASHES WHEN SNOW CHUTE DOOR IS OPEN.
5. PROVIDE FOUR (4) TYPE SK FIXTURES FOR LIGHTING WAYFINDING ENTRANCE SIGN AT THIS APPROXIMATE LOCATION. COORDINATE EXACT LOCATIONS WITH FINAL SIGNAGE LAYOUT.
6. PROVIDE CONNECTION TO HEAT TRACE VIA HEAT TRACE CONTROL PANEL(S). REFER TO DETAIL 1 SHEET EP502 FOR LOCATION OF HEAT TRACE CONTROL PANEL(S).
7. PROVIDE STORMCEPTOR FLOAT SWITCH IN MANHOLE AND PROVIDE 1 INCH CONDUIT FROM MANHOLE TO STORMCEPTOR CONTROLLER IN ELEC/COMM P011.

SCALE: 3/32" = 1' - 0"
0' 5'-4" 10'-8" 21'-4" 42'-8"

THESE PROJECT RECORD DOCUMENTS HAVE BEEN MODIFIED TO INCLUDE FIELD MARKUPS PROVIDED BY THE CONTRACTOR. AMC ENGINEERS HAS NOT FIELD VERIFIED THIS INFORMATION AND DOES NOT CERTIFY THE COMPLETENESS AND/OR ACCURACY OF THESE DOCUMENTS.

BY: ASJ

© 15334

NEESE CONSTRUCTION, INC.

Adams, Morgenthaler & Co., Inc.
DBA AMC ENGINEERS
701 E. Tudor Rd. Suite 230
Anchorage, AK 99503
www.amc-engineers.com

AMC ENGINEERS

Childrens Dental Clinic Building

4441 Diplomacy Drive, Anchorage AK 99508

Southcentral Foundation

No.	Description	Date

Drawn By: ERP/MPL
Checked By: ASJ
Date: 24 DEC 2018
Phase: RECORD DRAWINGS
Job No: 21519.00
SHEET TITLE: FLOOR PLAN - POWER & SPECIAL SYSTEMS - LEVEL PB

SHEET NO:

EP300

C:\Users\ERP.AMC-ARCH\Documents\SCF CDCB - MEP_ERP.rvt

1/22/2019 1:35:02 PM

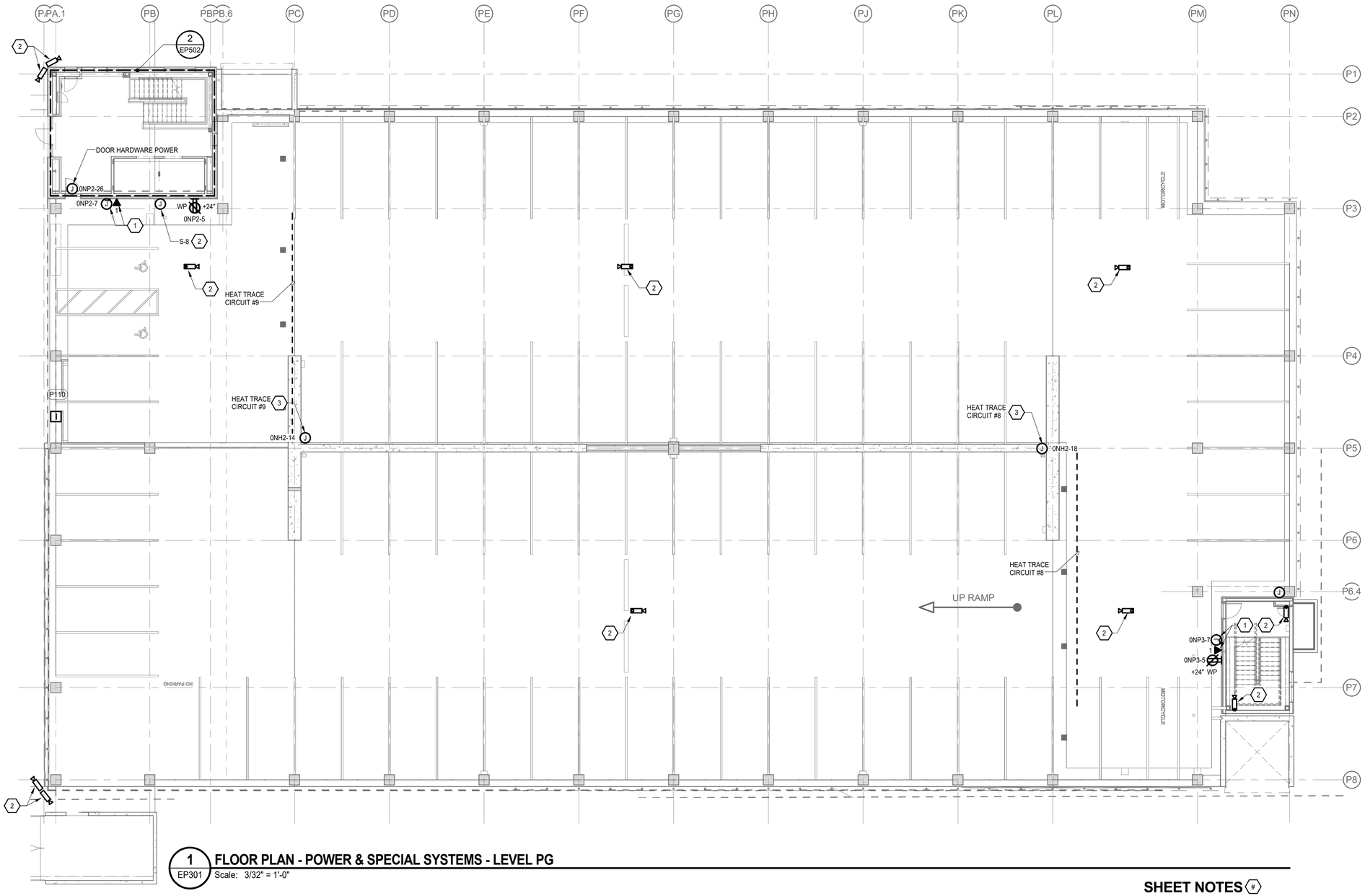

1 EP301 **FLOOR PLAN - POWER & SPECIAL SYSTEMS - LEVEL PG**

Scale: 3/32" = 1'-0"

SHEET NOTES (#)

1. PROVIDE POWER AND DATA CONNECT FOR BLUE PHONE AT +48" AFF.
2. PROVIDE ROUGH IN FOR FUTURE CAMERA.
3. PROVIDE CONNECTION TO HEAT TRACE. REFER TO MECHANICAL DRAWINGS FOR ADDITIONAL INFORMATION.

SCALE: 3/32" = 1' - 0"

0' 5'-4" 10'-8" 21'-4" 42'-8"

THESE PROJECT RECORD DOCUMENTS HAVE BEEN MODIFIED TO INCLUDE FIELD MARKUPS PROVIDED BY THE CONTRACTOR. AMC ENGINEERS HAS NOT FIELD VERIFIED THIS INFORMATION AND DOES NOT CERTIFY THE COMPLETENESS AND/OR ACCURACY OF THESE DOCUMENTS.

BY: ASJ

© 15334

NEESE CONSTRUCTION, INC.

Adams, Morgenthaler & Co., Inc.
Phone: (907) 563-3189
701 E. Tudor Rd. Suite 230
Anchorage, AK 99503
www.amc-engineers.com
AMC ENGINEERS

Childrens Dental Clinic Building

4441 Diplomacy Drive, Anchorage AK 99508

Southcentral Foundation

No.	Description	Date

Drawn By: ERP/MPL
Checked By: ASJ
Date: 24 DEC 2018
Phase: RECORD DRAWINGS
Job No: 21519.00
SHEET TITLE: FLOOR PLAN - POWER & SPECIAL SYSTEMS - LEVEL PG

SHEET NO:

EP301

C:\Users\ERP.AMC-ANC\Documents\SCF CDCS - MEP_ERP.rvt

12/27/2018 1:33:06 PM

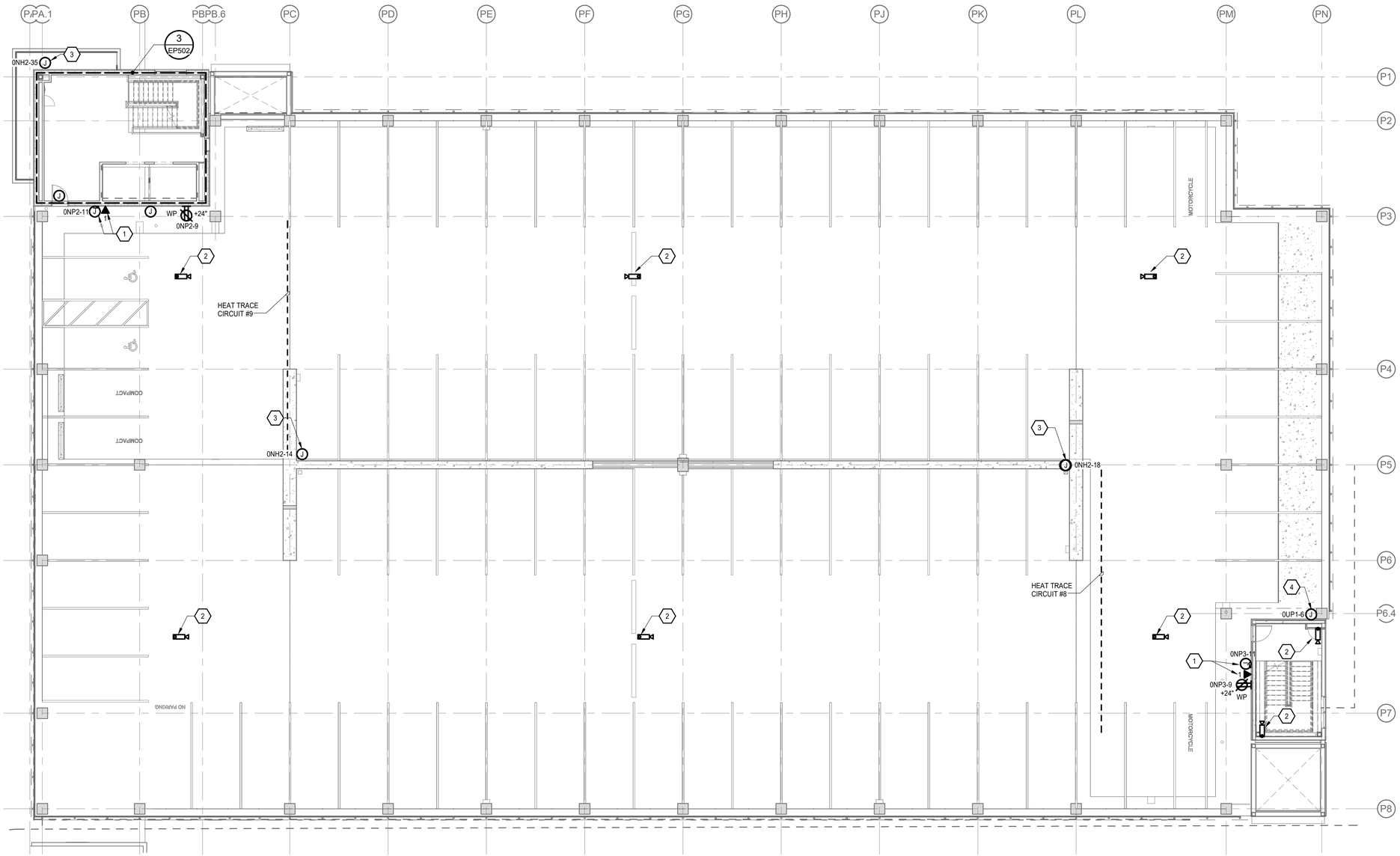

1 EP302 **FLOOR PLAN - POWER & SPECIAL SYSTEMS - LEVEL P1**

Scale: 3/32" = 1'-0"

SHEET NOTES

1. PROVIDE POWER AND DATA CONNECT FOR BLUE PHONE.
2. PROVIDE ROUGH IN FOR FUTURE CAMERA.
3. PROVIDE CONNECTION TO HEAT TRACE. REFER TO MECHANICAL DRAWINGS FOR ADDITIONAL INFORMATION.
4. PROVIDE APPROPRIATELY SIZED NEMA 3R ENCLOSURE WITH DUPLEX RECEPTACLE AND 24 PORT POE SWITCH. ROUTE CAMERA CABLING TO ENCLOSURE AND TERMINATE ON SWITCH. PROVIDE 6 STRANDS OF FIBER OPTIC CABLING FROM SWITCH AND TERMINATE IN ELEC/TELECOM P011 TELECOM ROOM.

SCALE: 3/32" = 1' - 0"

0' 5'-4" 10'-8" 21'-4" 42'-8"

THESE PROJECT RECORD DOCUMENTS HAVE BEEN MODIFIED TO INCLUDE FIELD MARKUPS PROVIDED BY THE CONTRACTOR. AMC ENGINEERS HAS NOT FIELD VERIFIED THIS INFORMATION AND DOES NOT CERTIFY THE COMPLETENESS AND/OR ACCURACY OF THESE DOCUMENTS.

BY: ASJ

© 15334

NEESER CONSTRUCTION, INC.

AMC ENGINEERS

Adams, Morgenthaler & Co., Inc.
Co.A No. C0342 - 907.267.9100
701 E. Tudor Rd. Suite 250
Anchorage, AK 99503
www.amc-engineers.com

Childrens Dental Clinic Building

4441 Diplomacy Drive, Anchorage AK 99508

Southcentral Foundation

No.	Description	Date

Drawn By: ERP/MPL

Checked By: ASJ

Date: 24 DEC 2018

Phase: RECORD DRAWINGS

Job No: 21519.00

SHEET TITLE: FLOOR PLAN - POWER & SPECIAL SYSTEMS - LEVEL P1

SHEET NO: EP302

C:\Users\ERP\AMC-ANCH\Documents\SCF CDCB - MEP_ERP.rvt

12/21/2018 1:35:11 PM

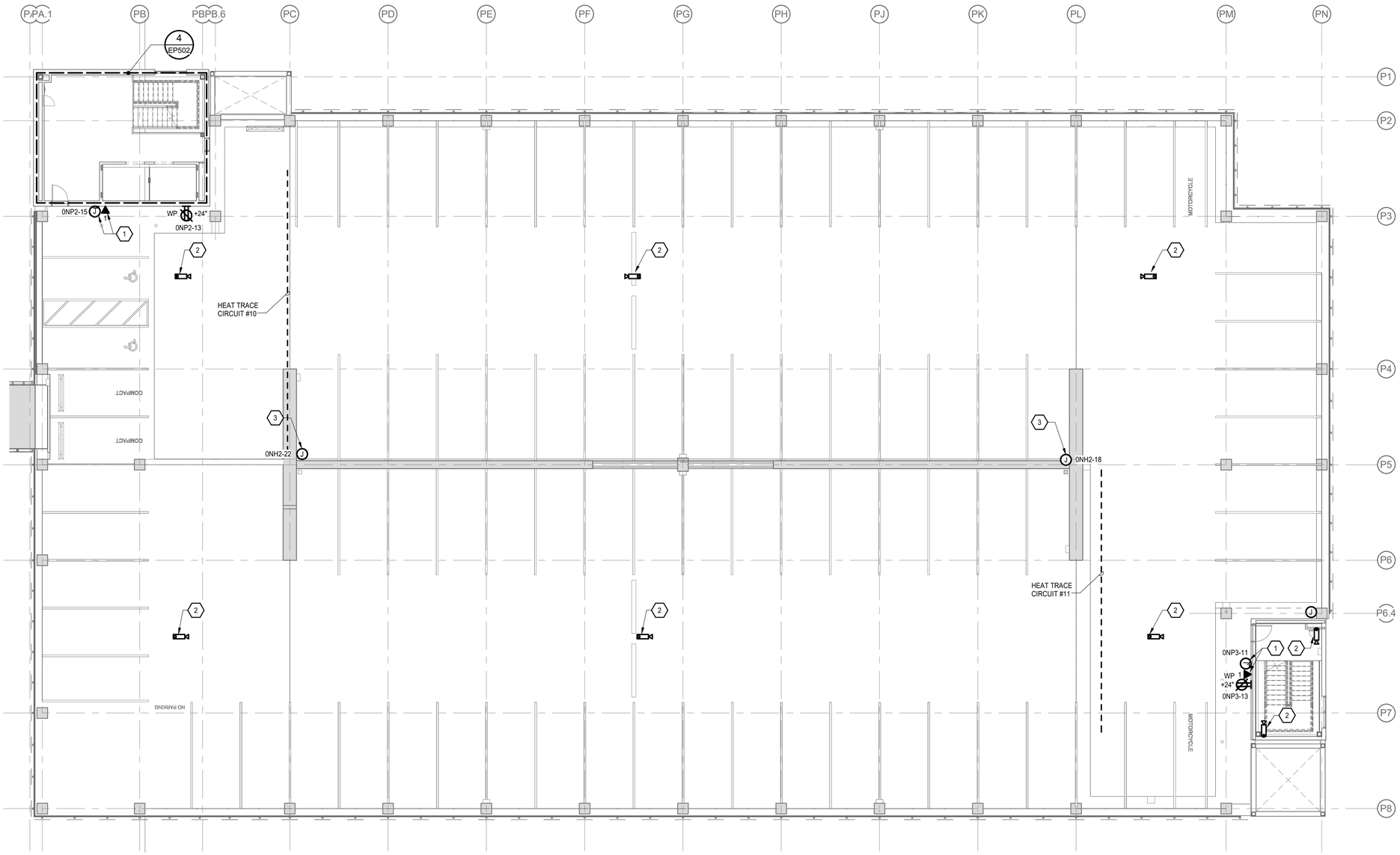

1 FLOOR PLAN - POWER & SPECIAL SYSTEMS - LEVEL P2

EP303 Scale: 3/32" = 1'-0"

SHEET NOTES (#)

1. PROVIDE POWER AND DATA CONNECT FOR BLUE PHONE.
2. PROVIDE ROUGH IN FOR FUTURE CAMERA.
3. PROVIDE CONNECTION TO HEAT TRACE. REFER TO MECHANICAL DRAWINGS FOR ADDITIONAL INFORMATION.

SCALE: 3/32" = 1' - 0"

0' 5'-4" 10'-8" 21'-4" 42'-8"

THESE PROJECT RECORD DOCUMENTS HAVE BEEN MODIFIED TO INCLUDE FIELD MARKUPS PROVIDED BY THE CONTRACTOR. AMC ENGINEERS HAS NOT FIELD VERIFIED THIS INFORMATION AND DOES NOT CERTIFY THE COMPLETENESS AND/OR ACCURACY OF THESE DOCUMENTS.

BY: ASJ

© 15334

NEESE CONSTRUCTION, INC.

Adams, Morgenthaler & Co., Inc.
DBA AMC ENGINEERS
701 E. Tudor Rd. Suite 230
Anchorage, AK 99503
www.amc-engineers.com

AMC ENGINEERS

Childrens Dental Clinic Building

4441 Diplomacy Drive, Anchorage AK 99508

Southcentral Foundation

No.	Description	Date

Drawn By: ERP/MPL
Checked By: ASJ
Date: 24 DEC 2018
Phase: RECORD DRAWINGS
Job No: 21519.00
SHEET TITLE: FLOOR PLAN - POWER & SPECIAL SYSTEMS - LEVEL P2

SHEET NO:

EP303

C:\Users\ERP.AMC-ANC\Documents\SCF CDCS - MEP_ERP.rvt

12/27/2018 1:35:16 PM

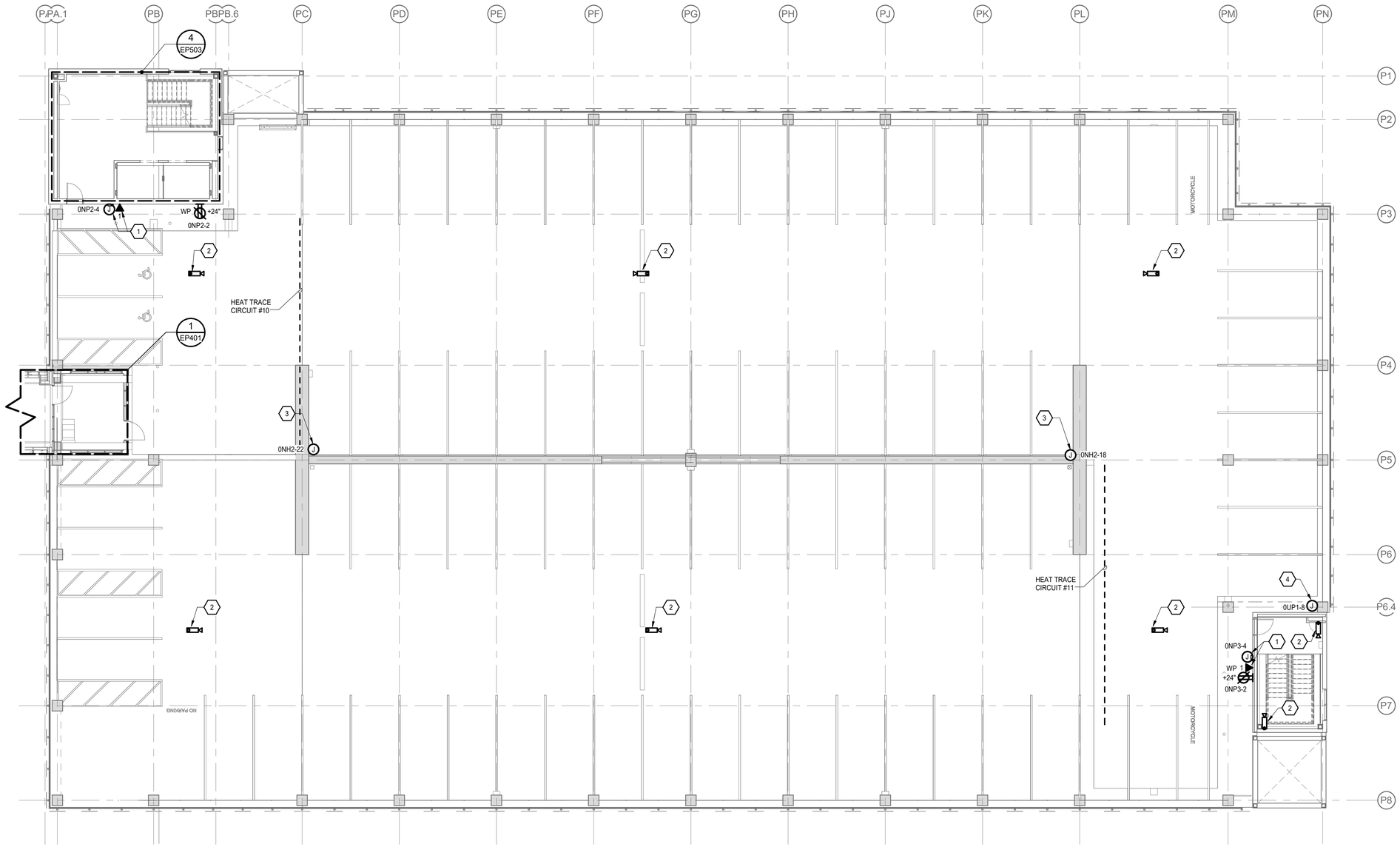

1 EP304 **FLOOR PLAN - POWER & SPECIAL SYSTEMS - LEVEL P3**

Scale: 3/32" = 1'-0"

SHEET NOTES

1. PROVIDE POWER AND DATA CONNECT FOR BLUE PHONE.
2. PROVIDE ROUGH IN FOR FUTURE CAMERA.
3. PROVIDE CONNECTION TO HEAT TRACE. REFER TO MECHANICAL DRAWINGS FOR ADDITIONAL INFORMATION.
4. PROVIDE APPROPRIATELY SIZED NEMA 3R ENCLOSURE WITH DUPLEX RECEPTACLE AND 24 PORT POE SWITCH. ROUTE CAMERA CABLING TO ENCLOSURE AND TERMINATE ON SWITCH. PROVIDE 6 STRANDS OF FIBER OPTIC CABLING FROM SWITCH AND TERMINATE IN ELEC/TELECOM P011 TELECOM ROOM.

SCALE: 3/32" = 1' - 0"

0' 5'-4" 10'-8" 21'-4" 42'-8"

THESE PROJECT RECORD DOCUMENTS HAVE BEEN MODIFIED TO INCLUDE FIELD MARKUPS PROVIDED BY THE CONTRACTOR. AMC ENGINEERS HAS NOT FIELD VERIFIED THIS INFORMATION AND DOES NOT CERTIFY THE COMPLETENESS AND/OR ACCURACY OF THESE DOCUMENTS.

BY: ASJ

© 15334

NEESER CONSTRUCTION, INC.

Adams, Morgenthaler & Co., Inc.
Co.A No. C0242 - 907.267.9100
701 E. Tudor Rd. Suite 250
Anchorage, AK 99503
www.amc-engineers.com

AMC ENGINEERS

Childrens Dental Clinic Building

4441 Diplomacy Drive, Anchorage AK 99508

Southcentral Foundation

No.	Description	Date

Drawn By: ERP/MPL

Checked By: ASJ

Date: 24 DEC 2018

Phase: RECORD DRAWINGS

Job No: 21519.00

SHEET TITLE: FLOOR PLAN - POWER & SPECIAL SYSTEMS - LEVEL P3

SHEET NO: EP304

C:\Users\ERP.AMC.ANCH\Documents\SCF CDCB - MEP_ERP.rvt

12/21/2018 1:35:21 PM

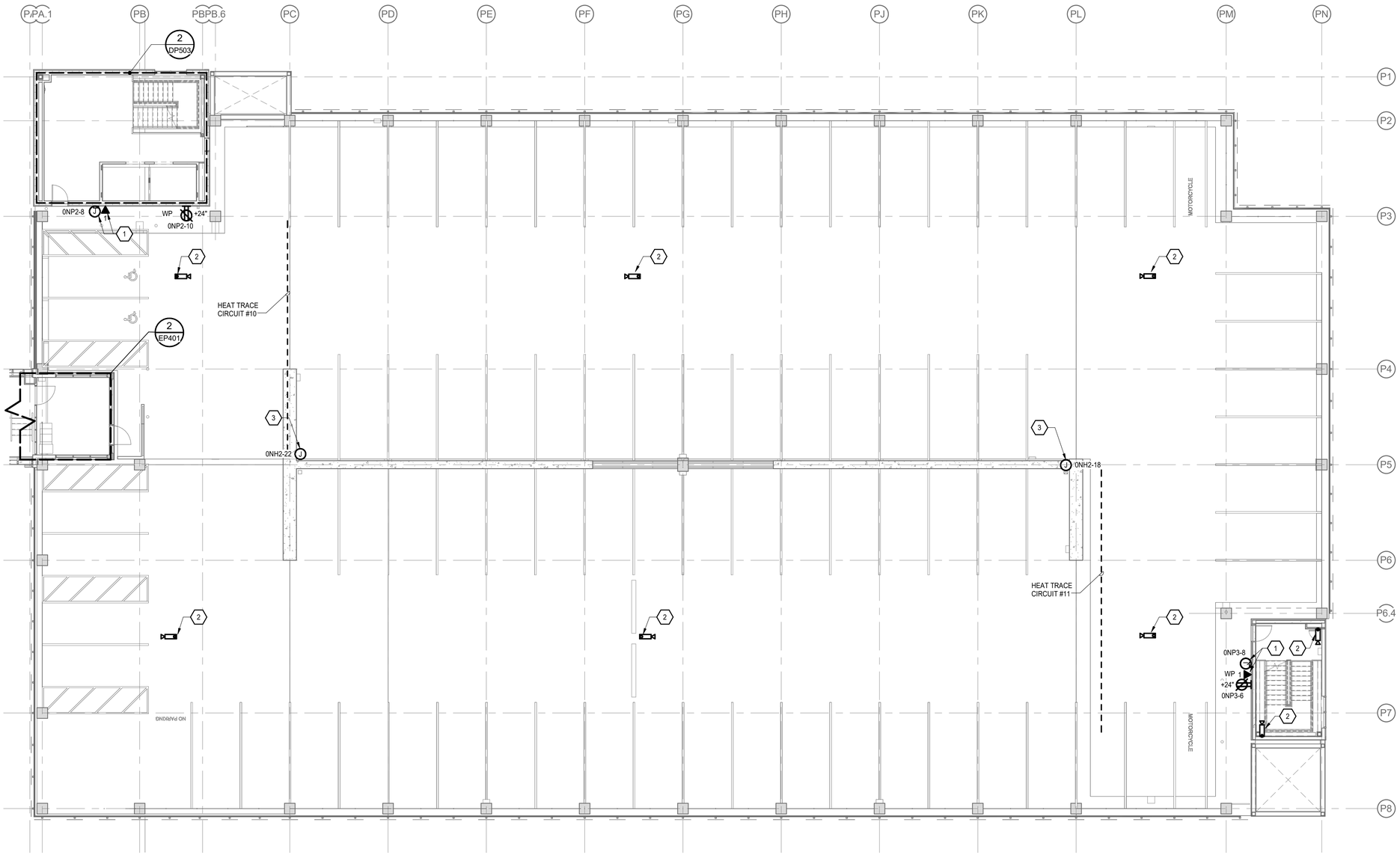

1 EP305 **FLOOR PLAN - POWER & SPECIAL SYSTEMS - LEVEL P4**

Scale: 3/32" = 1'-0"

SHEET NOTES

1. PROVIDE POWER AND DATA CONNECT FOR BLUE PHONE.
2. PROVIDE ROUGH IN FOR FUTURE CAMERA.
3. PROVIDE CONNECTION TO HEAT TRACE. REFER TO MECHANICAL DRAWINGS FOR ADDITIONAL INFORMATION.

SCALE: 3/32" = 1' - 0"

0' 5'-4" 10'-8" 21'-4" 42'-8"

THESE PROJECT RECORD DOCUMENTS HAVE BEEN MODIFIED TO INCLUDE FIELD MARKUPS PROVIDED BY THE CONTRACTOR. AMC ENGINEERS HAS NOT FIELD VERIFIED THIS INFORMATION AND DOES NOT CERTIFY THE COMPLETENESS AND/OR ACCURACY OF THESE DOCUMENTS.

BY: ASJ

© 15334

NEESER CONSTRUCTION, INC.

AMC ENGINEERS

Adams, Morgenthaler & Co., Inc.
Co.A No. C0242 - 907.257.9190
701 E. Tudor Rd. Suite 250
Anchorage, AK 99503
www.amc-engineers.com

Childrens Dental Clinic Building

4441 Diplomacy Drive, Anchorage AK 99508

Southcentral Foundation

No.	Description	Date

Drawn By: ERP/MPL

Checked By: ASJ

Date: 24 DEC 2018

Phase: RECORD DRAWINGS

Job No: 21519.00

SHEET TITLE: FLOOR PLAN - POWER & SPECIAL SYSTEMS - LEVEL P4

SHEET NO: EP305

C:\Users\ERP.AMC-ANCH\Documents\SCF CDCB - MEP_ERP.rvt

12/21/2018 1:35:26 PM

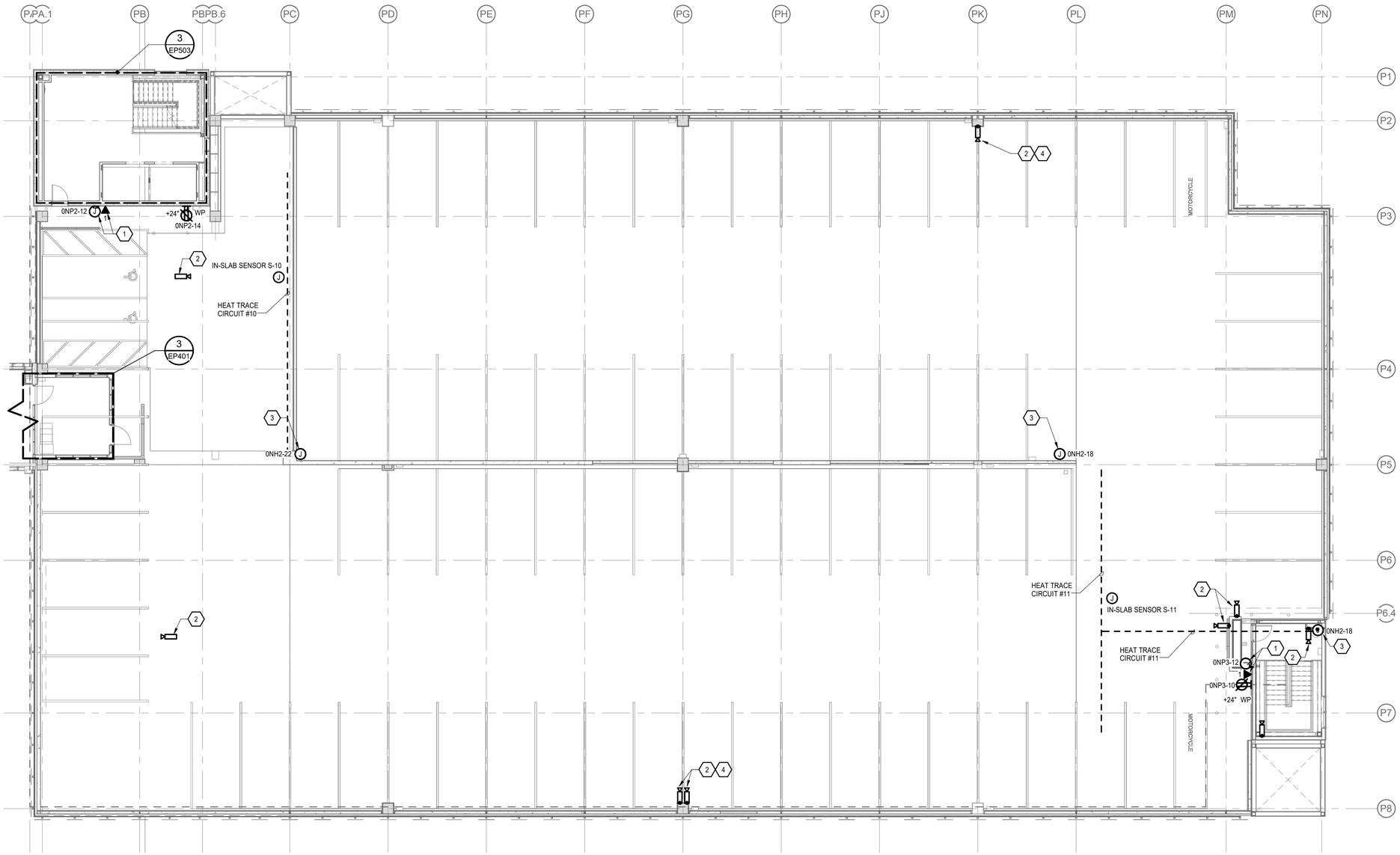

1 FLOOR PLAN - POWER & SPECIAL SYSTEMS - LEVEL P5

EP306 Scale: 3/32" = 1'-0"

SHEET NOTES (#)

1. PROVIDE POWER AND DATA CONNECT FOR BLUE PHONE.
2. PROVIDE ROUGH IN FOR FUTURE CAMERA.
3. PROVIDE CONNECTION TO HEAT TRACE. REFER TO MECHANICAL DRAWINGS FOR ADDITIONAL INFORMATION.
4. SURFACE MOUNT JUNCTION BOX TO LIGHTING FIXTURE POLE AND PAINT JUNCTION BOX TO MATCH POLE.

SCALE: 3/32" = 1' - 0"
0' 5'-4" 10'-8" 21'-4" 42'-8"

THESE PROJECT RECORD DOCUMENTS HAVE BEEN MODIFIED TO INCLUDE FIELD MARKUPS PROVIDED BY THE CONTRACTOR. AMC ENGINEERS HAS NOT FIELD VERIFIED THIS INFORMATION AND DOES NOT CERTIFY THE COMPLETENESS AND/OR ACCURACY OF THESE DOCUMENTS.

BY: ASJ

© 15334

NEESE CONSTRUCTION, INC.

Adams, Morgenthaler & Co., Inc.
DBA AMC ENGINEERS
701 E. Tudor Rd. Suite 230
Anchorage, AK 99503
www.amc-engineers.com

AMC ENGINEERS

Childrens Dental Clinic Building

4441 Diplomacy Drive, Anchorage AK 99508

Southcentral Foundation

No.	Description	Date

Drawn By: ERP/MPL
Checked By: ASJ
Date: 24 DEC 2018
Phase: RECORD DRAWINGS
Job No: 21519.00
SHEET TITLE: FLOOR PLAN - POWER & SPECIAL SYSTEMS - LEVEL P5

SHEET NO:

EP306

C:\Users\ERP.AMC-ANC\Documents\SCF CDCS - MEP_ERP.rvt

12/27/2018 1:55:31 PM

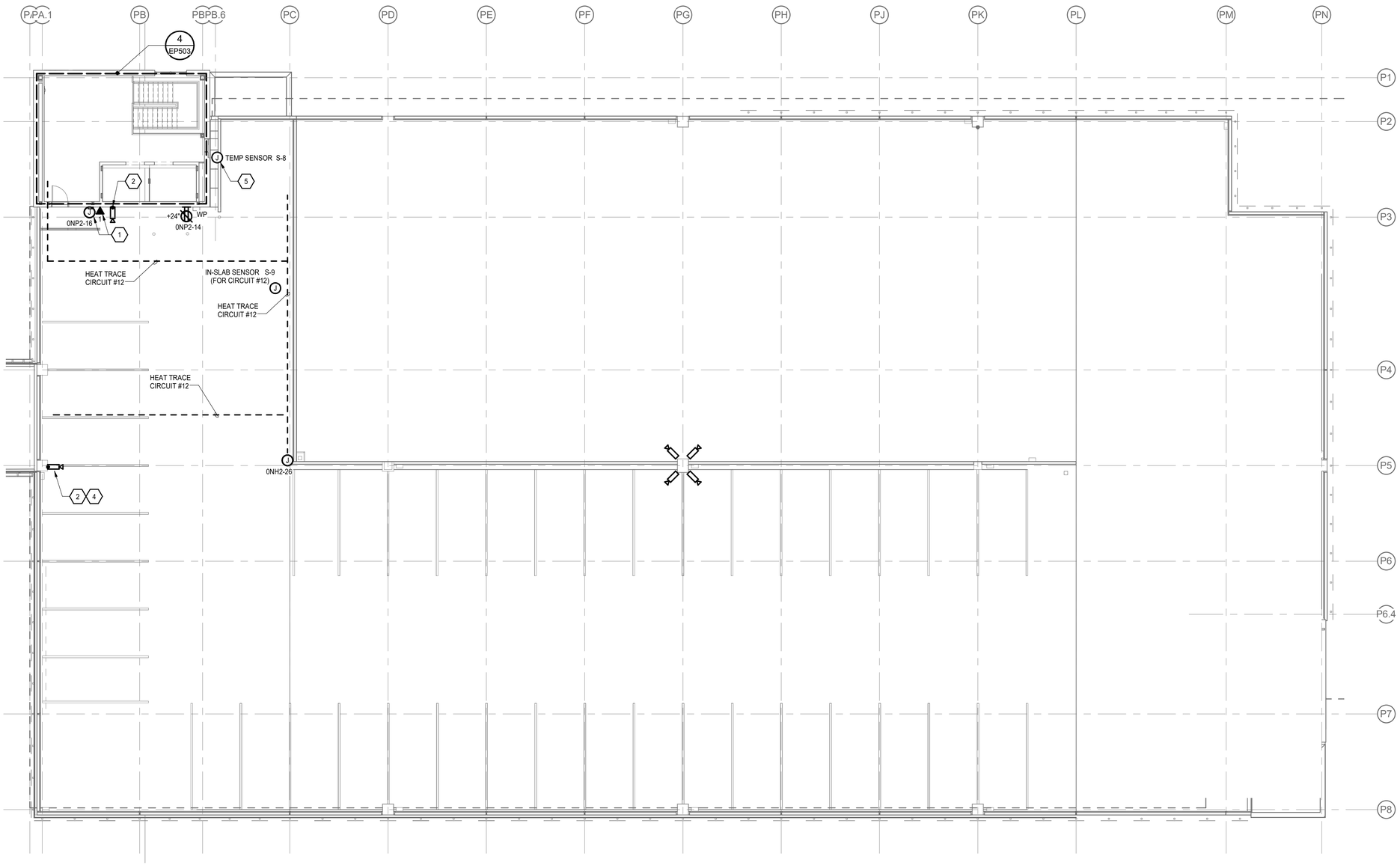

1 EP307 **FLOOR PLAN - POWER & SPECIAL SYSTEMS - LEVEL P6**

Scale: 3/32" = 1'-0"

SHEET NOTES

1. PROVIDE POWER AND DATA CONNECT FOR BLUE PHONE.
2. PROVIDE ROUGH IN FOR FUTURE CAMERA.
3. PROVIDE CONNECTION TO HEAT TRACE. REFER TO MECHANICAL DRAWINGS FOR ADDITIONAL INFORMATION.
4. SURFACE MOUNT JUNCTION BOX TO LIGHTING FIXTURE POLE AND PAINT JUNCTION BOX TO MATCH POLE.
5. PROVIDE TEMPERATURE SENSOR FOR HEAT TRACE CIRCUITS #8 AND #9 AT LOCATION INDICATED AND CONNECT TO HEAT TRACE CONTROL PANEL LOCATED IN ELEC P050. REFER TO CIVIL/MECHANICAL DRAWINGS FOR ADDITIONAL INFORMATION.

SCALE: 3/32" = 1' - 0"

0' 5'-4" 10'-8" 21'-4" 42'-8"

THESE PROJECT RECORD DOCUMENTS HAVE BEEN MODIFIED TO INCLUDE FIELD MARKUPS PROVIDED BY THE CONTRACTOR. AMC ENGINEERS HAS NOT FIELD VERIFIED THIS INFORMATION AND DOES NOT CERTIFY THE COMPLETENESS AND/OR ACCURACY OF THESE DOCUMENTS.

BY: ASJ

© 15334

NEESER CONSTRUCTION, INC.

AMC ENGINEERS

Adams, Morgenthaler & Co., Inc.
Co.A No. C0042 - 907.257.9190
701 E. Tudor Rd. Suite 250
Anchorage, AK 99503
www.amc-engineers.com

Childrens Dental Clinic Building

4441 Diplomacy Drive, Anchorage AK 99508

Southcentral Foundation

No.	Description	Date

Drawn By: ERP/MPL

Checked By: ASJ

Date: 24 DEC 2018

Phase: RECORD DRAWINGS

Job No: 21519.00

SHEET TITLE: FLOOR PLAN - POWER & SPECIAL SYSTEMS - LEVEL P6

SHEET NO: EP307

C:\Users\ERP.AMC-ANCH\Documents\SCF CDCB - MEP_ERP.rvt

12/21/2018 1:35:34 PM

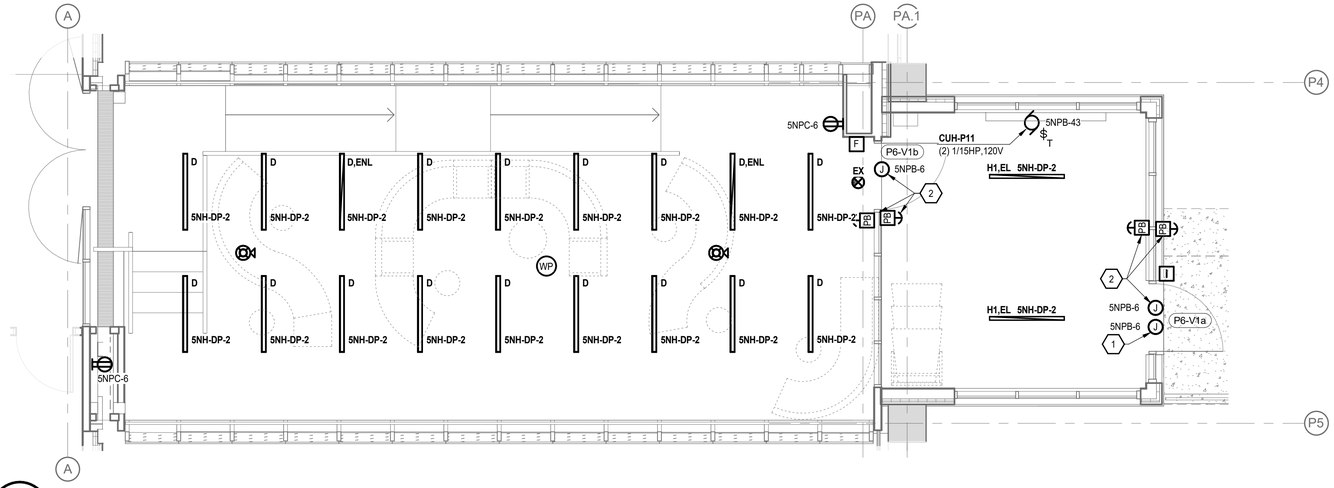

3 ENLARGED PLAN - SKYBRIDGE - LEVEL 5 TO P6

EP401 Scale: 1/4" = 1'-0"

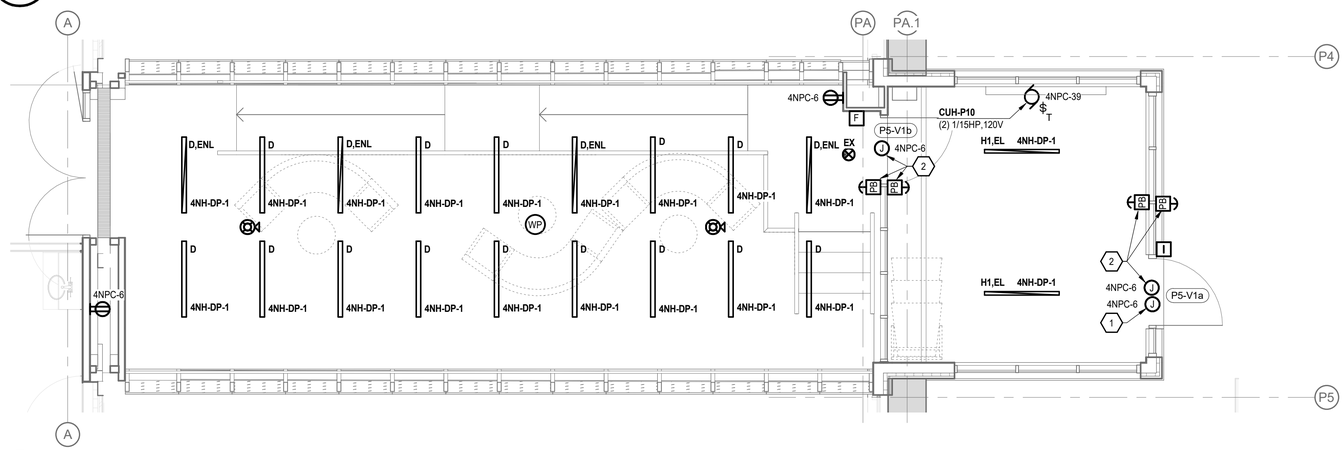

2 ENLARGED PLAN - SKYBRIDGE - LEVEL 4 TO P5

EP401 Scale: 1/4" = 1'-0"

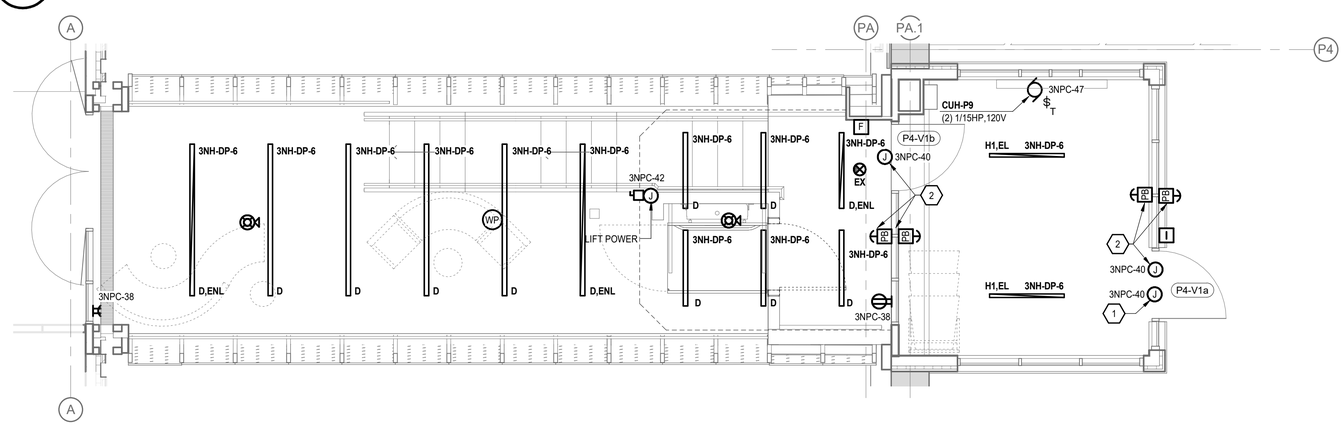

1 ENLARGED PLAN - SKYBRIDGE - LEVEL 3 TO P4

EP401 Scale: 1/4" = 1'-0"

SHEET NOTES

1. CONNECT ACCESS CONTROL SYSTEM AND DOOR HARDWARE POWER SUPPLIES TO CIRCUIT NOTED.
2. PROVIDE JUNCTION BOX FOR AUTOMATIC DOOR OPENER CONTROL AT 42 INCHES AFF. PROVIDE POWER CONNECTION TO DOOR OPERATOR AND CONTROLS IAW THE MANUFACTURERS INSTRUCTIONS, CIRCUIT AS NOTED.

SCALE: 1/4" = 1' - 0"

0' 2' 4' 8' 16'

THESE PROJECT RECORD DOCUMENTS HAVE BEEN MODIFIED TO INCLUDE FIELD MARKUPS PROVIDED BY THE CONTRACTOR. AMC ENGINEERS HAS NOT FIELD VERIFIED THIS INFORMATION AND DOES NOT CERTIFY THE COMPLETENESS AND/OR ACCURACY OF THESE DOCUMENTS.

BY: ASJ

© 15334

NEESE CONSTRUCTION, INC.

AMC ENGINEERS

Adams, Mongiatmatte & Co., Inc.
DBA AMC Engineers
701 E. Tudor Rd. Suite 230
Anchorage, AK 99503
www.amc-engineers.com

Childrens Dental Clinic Building

4441 Diplomacy Drive, Anchorage AK 99508

Southcentral Foundation

No.	Description	Date

Drawn By: ERP/MPL
Checked By: ASJ
Date: 24 DEC 2018
Phase: RECORD DRAWINGS
Job No: 21519.00
SHEET TITLE: ENLARGED PLAN - SKYBRIDGE
SHEET NO: EP401

C:\Users\ERP AMC-ARCH\Documents\SCF CDCB - MEP_ERP.rvt

12/21/2018 1:35:40 PM

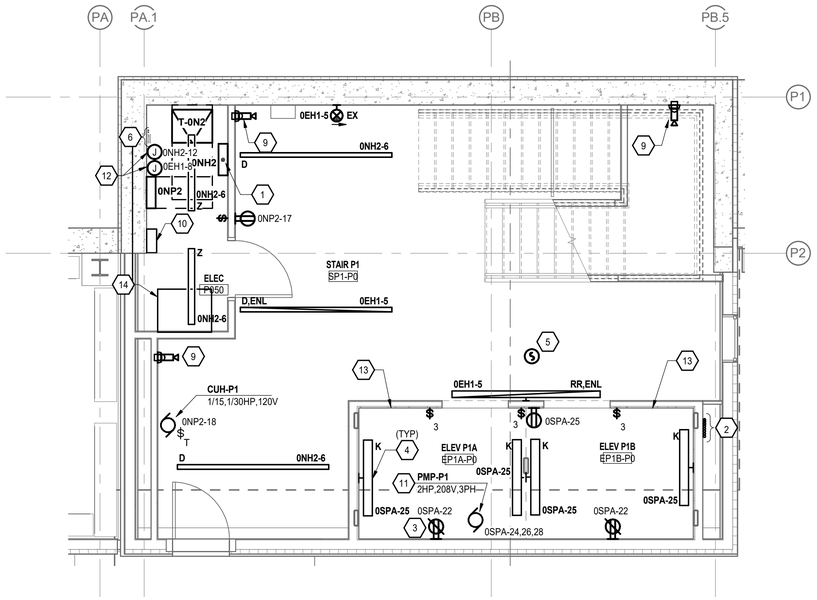

1 ENLARGED PLAN - LEVEL P0 - LOBBY

EP502 Scale: 1/4" = 1'-0"

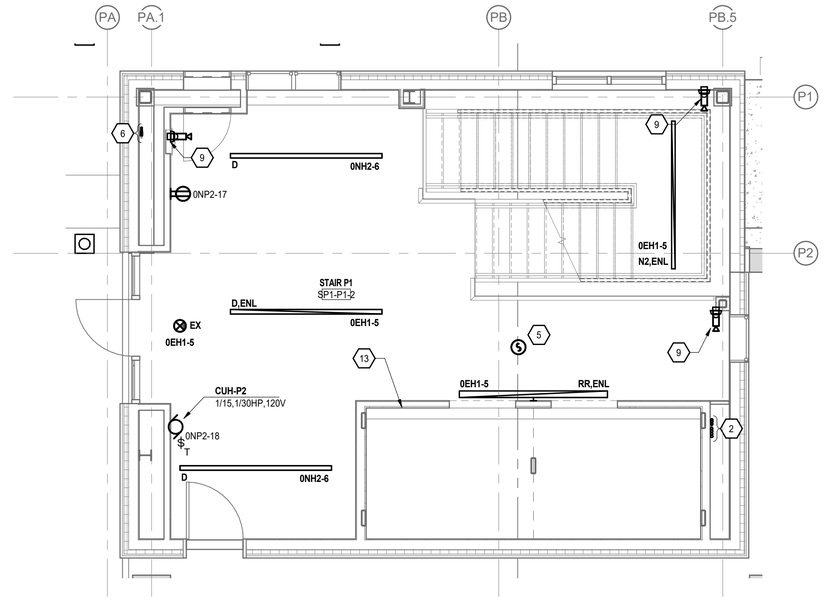

2 ENLARGED PLAN - LEVEL P1 - LOBBY

EP502 Scale: 1/4" = 1'-0"

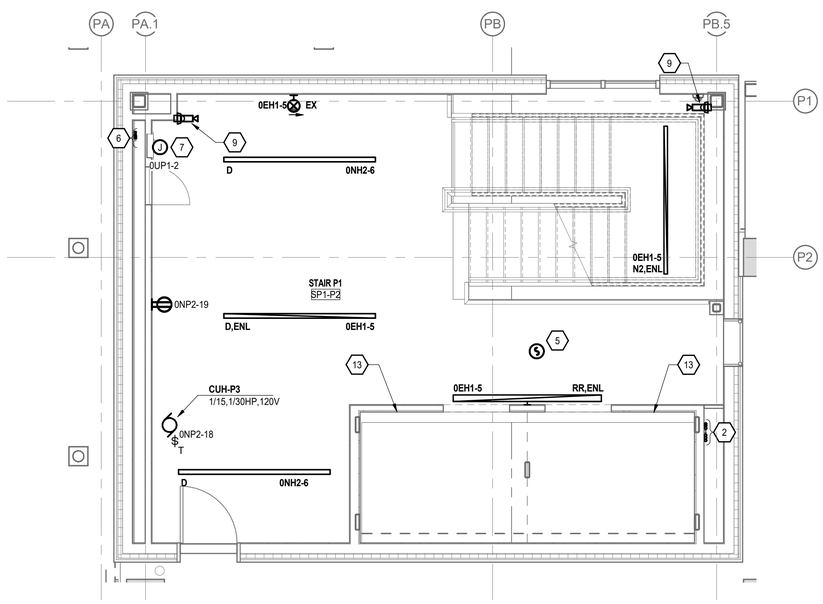

3 ENLARGED PLAN - LEVEL P2 - LOBBY

EP502 Scale: 1/4" = 1'-0"

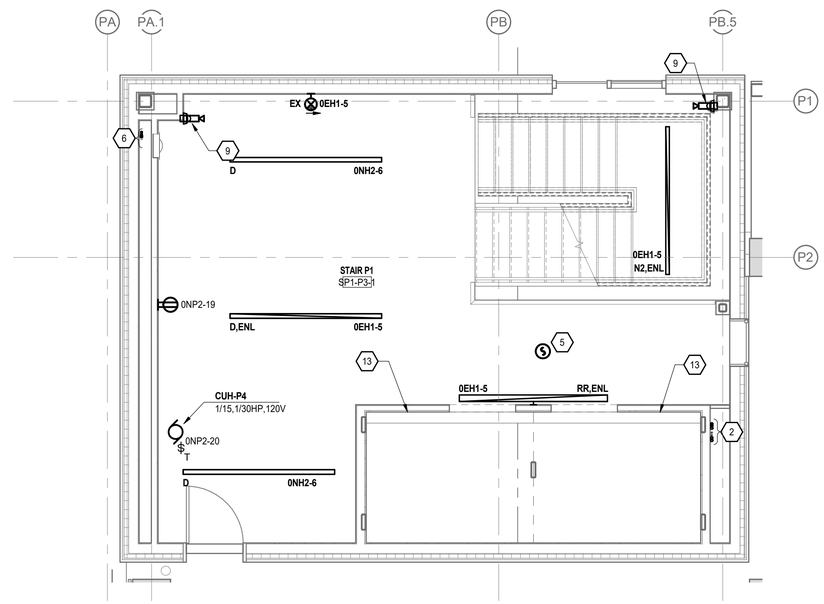

4 ENLARGED PLAN - LEVEL P3 - LOBBY

EP502 Scale: 1/4" = 1'-0"

SHEET NOTES

1. PROVIDE 1@ 1-1/2 INCH - FEEDER TO PANEL "0NH2" FROM PANEL "0NH1" LOCATED IN THE BASEMENT ELEC/COMM ROOM P011.
2. ROUTE CONDUIT FOR SOUTH STAIR TOWER TELECOM AT THIS APPROXIMATE LOCATION. REFER TO SHEET EP501 FOR ADDITIONAL INFORMATION.
3. PROVIDE GFCI RECEPTACLE IN ELEVATOR PIT. PROVIDE DEDICATED CIRCUIT TO RECEPTACLE, CIRCUIT AS NOTED.
4. PROVIDE ELEVATOR PIT LIGHTING AT LOCATIONS INDICATED, AND CONNECT TO DEDICATED CIRCUIT NOTED. MOUNT LIGHTING FIXTURE AT APPROXIMATELY FOUR (4) FEET ABOVE BOTTOM OF PIT. COORDINATE MOUNTING LOCATIONS WITH ELEVATOR INSTALLER TO ENSURE LIGHTING FIXTURES DO NOT INTERFERE WITH ELEVATOR CAR OR ACCESSORIES, AND MINIMUM LIGHTING LEVELS ARE MAINTAINED.
5. PROVIDE SMOKE DETECTOR IN ELEVATOR LOBBY FOR ELEVATOR RECALL IAW THE SPECIFICATIONS.
6. ROUTE LIGHTING, POWER AND ELEVATOR FEEDERS FOR LEVELS 0-7 INSIDE CHASE AT THIS APPROXIMATE LOCATION REFER TO SHEET EP801 FOR ADDITIONAL INFORMATION.
7. PROVIDE APPROPRIATELY SIZED NEMA 1 ENCLOSURE RECESSED IN WALL WITH DUPLEX RECEPTACLE AND 24 PORT POE SWITCH. ROUTE CAMERA CABLING TO ENCLOSURE AND TERMINATE ON SWITCH. PROVIDE 6 STRANDS OF FIBER OPTIC CABLING FROM SWITCH AND TERMINATE IN ELEC/TELECOM P011 TELECOM ROOM.
8. NOT USED.
9. PROVIDE ROUGH IN FOR FUTURE CAMERA.
10. LOCATION OF ELEVATOR PIT SUMP PUMP CONTROL PANEL.
11. ELEVATOR SUMP PUMP PROVIDED UNDER DIVISION 22. PROVIDE CONNECTIONS TO, AND BETWEEN ELEVATOR SUMP PUMP AND SUMP PUMP CONTROL PANEL. PROVIDE CONDUITS FOR POWER AND CONTROLS. CONNECT SUMP PUMP TO CIRCUIT NOTED VIA CONTROL PANEL.
12. PROVIDE nLIGHT RELAYS FOR EMERGENCY AND NORMAL EXTERIOR PARKING GARAGE LIGHTING. ROUTE CIRCUITS NOTED THROUGH RELAY CONTACTS. CONNECT RELAYS TO PARKING GARAGE PHOTOCELL FOR CONTROL OF EXTERIOR LIGHTING. REFER TO SHEET E130 FOR LOCATION OF PHOTOCELL.
13. PROVIDE TWO-WAY COMMUNICATION DEVICE WITH A DEDICATED PHONE LINE. ROUTE TELECOM HORIZONTAL CABLING TO TELECOM ROOM ON THIS FLOOR.
14. PROVIDE HEAT TRACE CONTROL PANEL AT LOCATION INDICATED. MOUNT ACS-UIT2 IN HEAT TRACE CONTROL PANEL ENCLOSURE. REFER TO SHEET EP300 FOR ADDITIONAL INFORMATION ON HEAT TRACE CIRCUITS AND SENSOR LOCATIONS. PROVIDE SPARE ONE INCH CONDUIT FROM CONTROL PANEL TO DENTAL BUILDING BASMENT.

SCALE: 1/4" = 1' - 0"

0' 2' 4' 8' 16'

THESE PROJECT RECORD DOCUMENTS HAVE BEEN MODIFIED TO INCLUDE FIELD MARKUPS PROVIDED BY THE CONTRACTOR. AMC ENGINEERS HAS NOT FIELD VERIFIED THIS INFORMATION AND DOES NOT CERTIFY THE COMPLETENESS AND/OR ACCURACY OF THESE DOCUMENTS.

BY: ASJ

© 15334

NEESE CONSTRUCTION, INC.
AMC ENGINEERS
Adams, Mongermann & Co., Inc.
A Division of CRS Group
701 E. Tudor Rd. Suite 230
Anchorage, AK 99503
www.amc-engineers.com

Childrens Dental Clinic Building

4441 Diplomacy Drive, Anchorage AK 99508

Southcentral Foundation

No.	Description	Date

Drawn By: ERP/MPL
Checked By: ASJ
Date: 24 DEC 2018
Phase: RECORD DRAWINGS
Job No: 21519.00
SHEET TITLE: ENLARGED FLOOR PLANS - ELECTRICAL
SHEET NO: EP502

C:\Users\ERP AMC-ARCH\Documents\SCF CDCB - MEP_ERP.rvt

12/21/2018 1:33:47 PM

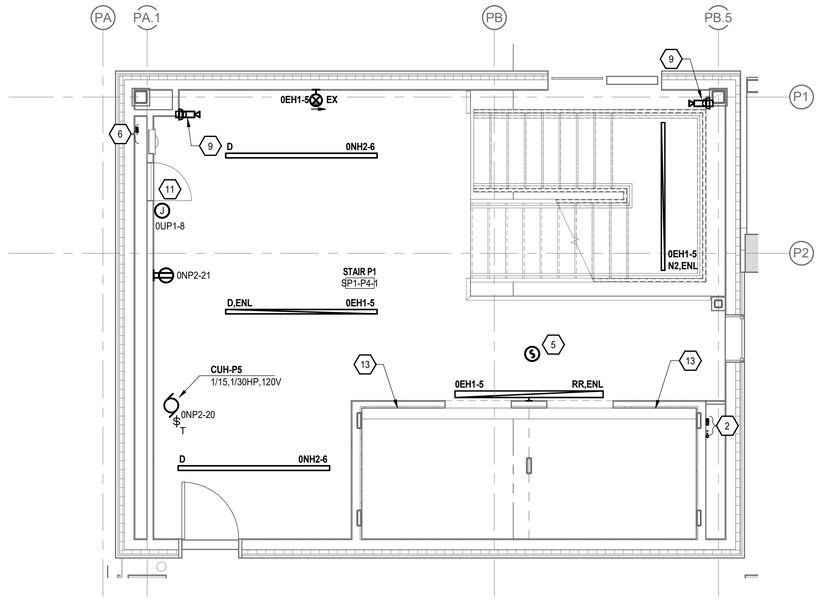

1 ENLARGED PLAN - LEVEL P4 - LOBBY

EP503 Scale: 1/4" = 1'-0"

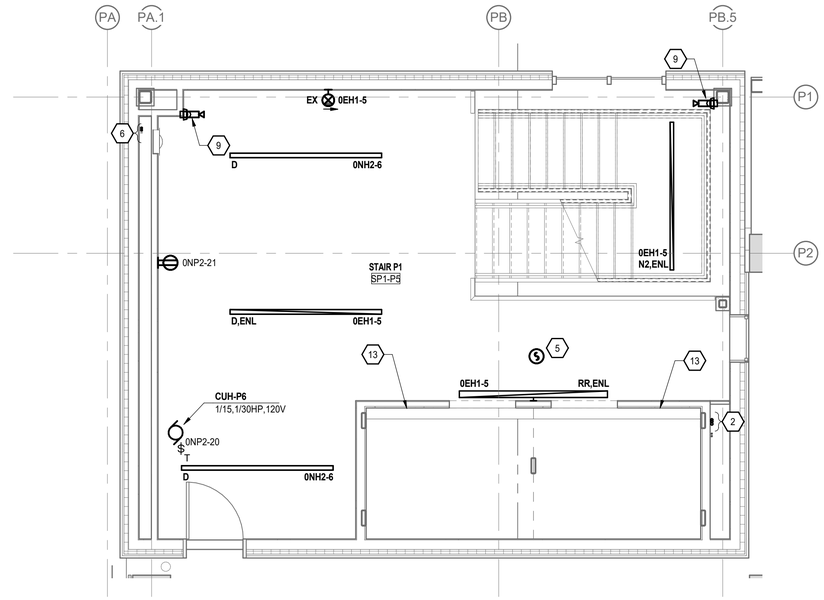

2 ENLARGED PLAN - LEVEL P5 - LOBBY

EP503 Scale: 1/4" = 1'-0"

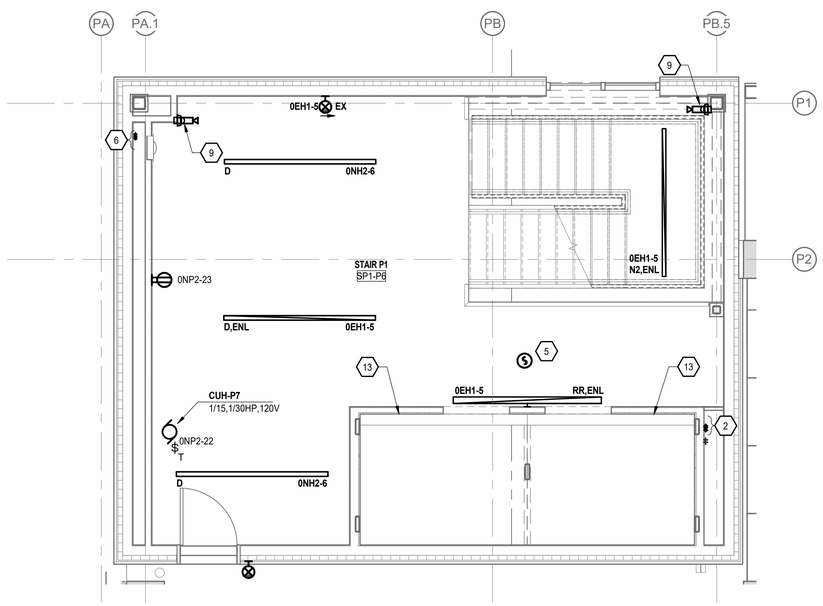

3 ENLARGED PLAN - LEVEL P6 - LOBBY

EP503 Scale: 1/4" = 1'-0"

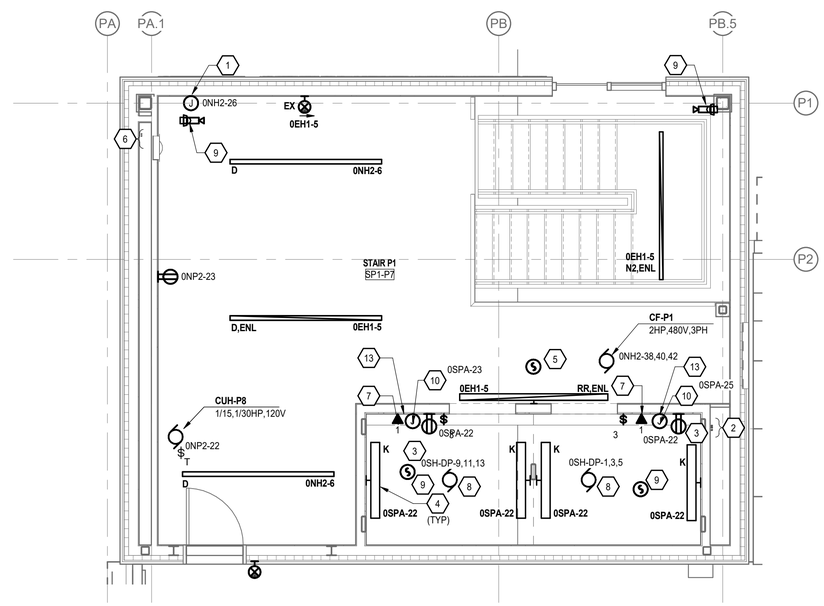

4 ENLARGED PLAN - LEVEL P7 - LOBBY

EP503 Scale: 1/4" = 1'-0"

SHEET NOTES

1. PROVIDE CONNECTION TO HEAT TRACE. REFER TO MECHANICAL DRAWINGS FOR ADDITIONAL INFORMATION.
2. ROUTE CONDUIT FOR SOUTH STAIR TOWER TELECOM AT THIS APPROXIMATE LOCATION. REFER TO SHEET EP501 FOR ADDITIONAL INFORMATION.
3. PROVIDE RECEPTACLE IN ELEVATOR SHAFT. CONNECT RECEPTACLE TO CIRCUIT NOTED.
4. PROVIDE ELEVATOR SHAFT LIGHTING AT LOCATIONS INDICATED, AND CONNECT TO DEDICATED CIRCUIT NOTED. COORDINATE MOUNTING LOCATIONS WITH ELEVATOR INSTALLER TO ENSURE LIGHTING FIXTURES DO NOT INTERFERE WITH ELEVATOR CAR OR ACCESSORIES, AND MINIMUM LIGHTING LEVELS ARE MAINTAINED.
5. PROVIDE SMOKE DETECTOR IN ELEVATOR LOBBY FOR ELEVATOR RECALL IAW THE SPECIFICATIONS.
6. ROUTE LIGHTING, POWER AND ELEVATOR FEEDERS FOR LEVELS 0-7 INSIDE CHASE AT THIS APPROXIMATE LOCATION REFER TO SHEET EP801 FOR ADDITIONAL INFORMATION.
7. PROVIDE DEDICATED TELECOM CONNECTION TO ELEVATOR CONTROLLER.
8. PROVIDE CONNECTION TO ELEVATOR CONTROLLER VIA DISCONNECT LOCATED IN ELEVATOR DOOR JAM. CONNECT TO CIRCUIT INDICATED. REFER TO SHUT DOWN SEQUENCE IN THE SPECIFICATIONS TO ENSURE POWER IS DISCONNECTED TO ELEVATOR CONTROLLERS PRIOR TO ACTIVATION OF SPRINKLERS. COORDINATE INSTALLATION WITH OTIS POWER REQUIREMENTS PRIOR TO INSTALLATION.
9. PROVIDE A FIXED TEMPERATURE HEAT DETECTOR(s) ADJACENT TO SPRINKLER HEAD(s) IN ELEVATOR SHAFT. REFER TO THE SPECIFICATIONS FOR ADDITIONAL INFORMATION ON ELEVATOR SHUTDOWN SEQUENCING. PROVIDE ADDRESSABLE RELAYS IN MACHINE SPACE WITHIN 3 FEET OF CONTROLLER IAW NFPA 72.
10. CONNECT ELEVATOR CAR LIGHTS AND RECEPTACLE TO DISCONNECT LOCATED IN ELEVATOR DOOR JAM, CIRCUIT AS NOTED.
11. PROVIDE APPROPRIATELY SIZED NEMA 1 ENCLOSURE RECESSED IN WALL WITH DUPLEX RECEPTACLE AND 24 PORT POE SWITCH. ROUTE CAMERA CABLING TO ENCLOSURE AND TERMINATE ON SWITCH. PROVIDE 6 STRANDS OF FIBER OPTIC CABLING FROM SWITCH AND TERMINATE IN ELEC/TELECOM P011 TELECOM ROOM.
12. PROVIDE CONNECTION TO HEAT TRACE. REFER TO MECHANICAL DRAWINGS FOR ADDITIONAL INFORMATION.
13. PROVIDE TWO-WAY COMMUNICATION DEVICE WITH A DEDICATED PHONE LINE. ROUTE TELECOM HORIZONTAL CABLING TO TELECOM ROOM ON THIS FLOOR.

SCALE: 1/4" = 1' - 0"
0' 2' 4' 8' 16'

THESE PROJECT RECORD DOCUMENTS HAVE BEEN MODIFIED TO INCLUDE FIELD MARKUPS PROVIDED BY THE CONTRACTOR. AMC ENGINEERS HAS NOT FIELD VERIFIED THIS INFORMATION AND DOES NOT CERTIFY THE COMPLETENESS AND/OR ACCURACY OF THESE DOCUMENTS.

BY: ASJ

© 15334

NEESE CONSTRUCTION, INC.
Adams, Morgenthaler & Co., Inc.
Mailing: PO Box 240789
701 E. Tudor Rd. Suite 230
Anchorage, AK 99503
www.amc-engineers.com
AMC ENGINEERS

Childrens Dental Clinic Building

4441 Diplomacy Drive, Anchorage AK 99508

Southcentral Foundation

No.	Description	Date

Drawn By: ERP/MPL
Checked By: ASJ
Date: 24 DEC 2018
Phase: RECORD DRAWINGS
Job No: 21519.00
SHEET TITLE: ENLARGED FLOOR PLANS - ELECTRICAL
SHEET NO: EP503

C:\Users\ERP AMC\ARCHDocuments\SCF CDCB - NEF_ERP.rvt
12/21/2018 1:33:53 PM

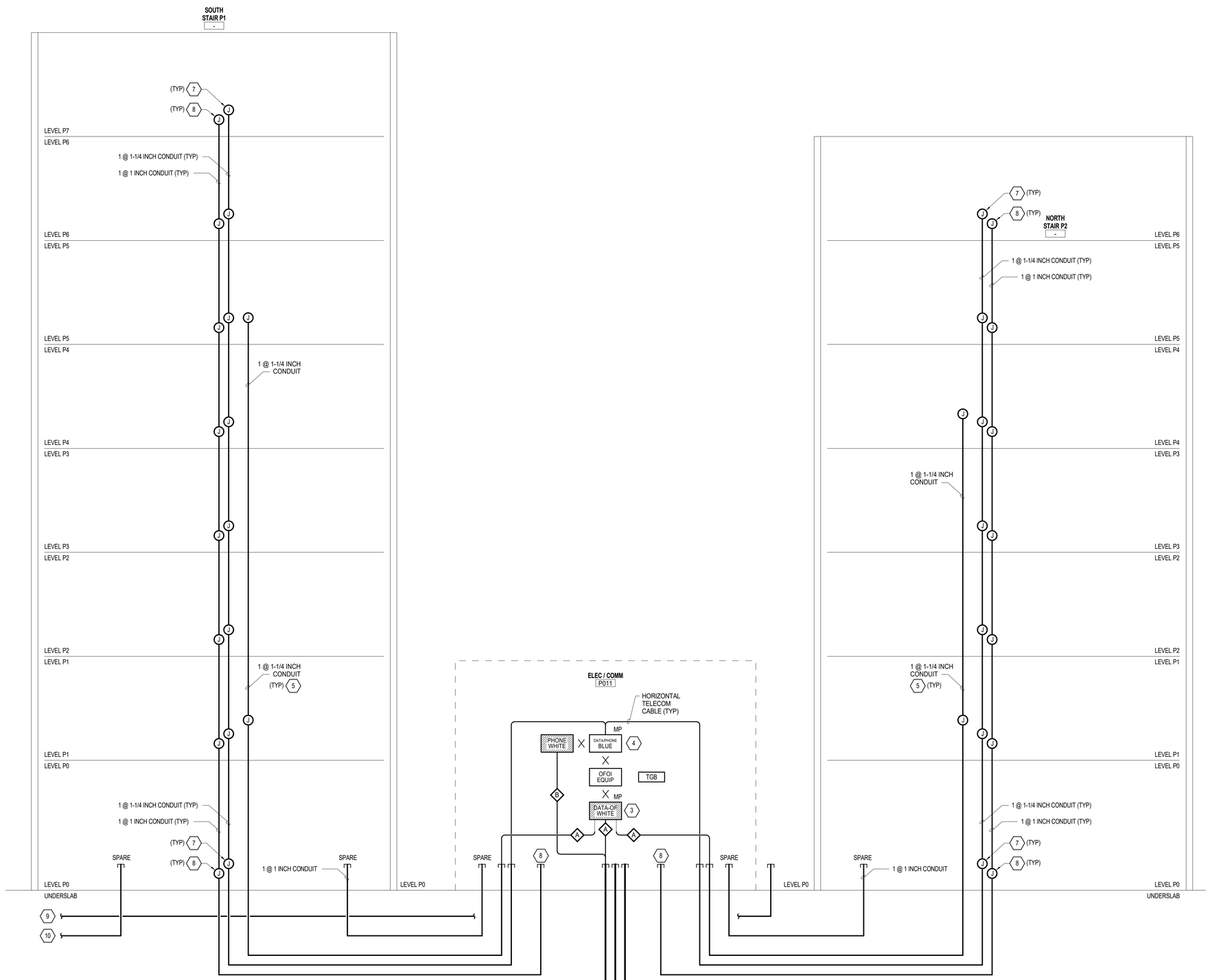

1 EP701 TELECOM ONE-LINE DIAGRAM - PARKING STRUCTURE

SCALE: NONE

GENERAL NOTES

1. HORIZONTAL PATHWAYS SHOWN ARE DIAGRAMMATIC REPRESENTATIONS OF TYPICAL PATHWAY CONFIGURATIONS. TELECOM CABLES TO BE ROUTED TO THE TELECOM ROOMS DIRECTLY IN CONDUIT OR VIA AVAILABLE HORIZONTAL CABLE TRAYS.
2. REFER TO ENLARGED TELECOM ROOM PLANS FOR ADDITIONAL INFORMATION.

SHEET NOTES (#)

1. EXISTING 2@ 4 INCH CONDUITS FROM 4501 DIPLOMACY DRIVE INTERCEPTED AND EXTENDED TO ELEC/COMM ROOM P011. REFER TO SITE UTILITIES PLAN FOR ADDITIONAL INFORMATION.
2. EXISTING 1@ 4 INCH CONDUIT FROM 4160 TUDOR CENTER INTERCEPTED AND EXTENDED TO ELEC/COMM ROOM P011. REFER TO SITE UTILITIES PLAN FOR ADDITIONAL INFORMATION.
3. PROVIDE RACK MOUNTED FIBER OPTIC CABLE PATCH PANELS. PROVIDE PATCH PANELS IN SUFFICIENT QUANTITY TO TERMINATE FIBER OPTIC CABLES.
4. PROVIDE RACK MOUNTED HORIZONTAL TELECOM CABLE PATCH PANELS. PROVIDE PATCH PANELS IN SUFFICIENT QUANTITY TO TERMINATE HORIZONTAL TELECOM CABLES.
5. PROVIDE 1@ 1-1/4 INCH CONDUIT FROM TELECOM RACK TO LEVELS INDICATED FOR FIBER OPTIC CONNECTION TO FUTURE CCTV CAMERAS.
6. PROVIDE 1@ 1 INCH AND 4@ 4 INCH CONDUITS ROUTED FROM BASEMENT MAIN TELECOM ROOM TO PARKING GARAGE ELEC/COMM ROOM P011. REFER TO SITE UTILITIES PLAN FOR ADDITIONAL INFORMATION.
7. PROVIDE 1@ 1-1/4 INCH CONDUIT TO ROUTE THROUGH EACH LEVEL FOR CONNECTION TO DURESS PHONE. PROVIDE JUNCTION BOX AT EACH LEVEL FOR CONNECTION TO THAT LEVELS DURESS PHONE. DURESS PHONES ARE ALTERNATE #1.
8. PROVIDE 1@ 1 INCH CONDUIT TO ROUTE THROUGH EACH LEVEL FOR CONNECTION TO FIRE ALARM SYSTEM DEVICES. PROVIDE JUNCTION BOX AT EACH LEVEL FOR CONNECTION TO THAT LEVELS FIRE ALARM DEVICES.
9. PROVIDE 1@1 INCH CONDUIT FOR STORMCEPTOR REMOTE ANNUNCIATOR.
10. PROVIDE 1@1 INCH CONDUIT FOR HEAT TRACE REMOTE INTERFACE MODULE.

LEGEND

LEC	LOCAL EXCHANGE CARRIER (TELEPHONE COMPANY)
X	CROSS-CONNECT
TBB	TELECOMMUNICATION BONDING BACKBONE
OF	OPTICAL FIBER CABLE
MP	MODULAR PATCH PANEL
IDC	INSULATION DISPLACEMENT CONNECTOR BLOCK
PHONE (COLOR)	TELEPHONE CONNECTING HARDWARE (110 BLOCKS) LABEL COLOR AS INDICATED QUANTITY TO MATCH CONNECTED CABLES
DATA/PHONE (COLOR)	DATA/TELEPHONE CONNECTING HARDWARE LABEL COLOR AS INDICATED QUANTITY TO MATCH CONNECTED CABLES
DATA (COLOR)	DATA CONNECTING HARDWARE LABEL COLOR AS INDICATED QUANTITY TO MATCH CONNECTED CABLES

CABLE DESCRIPTIONS

A	6 STRAND OM4-50/125uM MULTI-MODE FIBER OPTIC CABLE
B	25 PAIR COPPER VOICE BACKBONE

THESE PROJECT RECORD DOCUMENTS HAVE BEEN MODIFIED TO INCLUDE FIELD MARKUPS PROVIDED BY THE CONTRACTOR. AMC ENGINEERS HAS NOT FIELD VERIFIED THIS INFORMATION AND DOES NOT CERTIFY THE COMPLETENESS AND/OR ACCURACY OF THESE DOCUMENTS.

BY: ASJ

© 15334

NEESE CONSTRUCTION, INC.
AMC ENGINEERS
Adams, Mongiardiere & Co., Inc.
DBA: AMC Engineers
701 E. Tudor Rd. Suite 230
Anchorage, AK 99503
www.amc-engineers.com

Childrens Dental Clinic Building

4441 Diplomacy Drive, Anchorage AK 99508

Southcentral Foundation

No.	Description	Date

Drawn By: ERP/MPL
Checked By: ASJ
Date: 24 DEC 2018
Phase: RECORD DRAWINGS
Job No: 21519.00
SHEET TITLE: ONE-LINE DIAGRAM - TELECOM

SHEET NO: EP701

C:\Users\ERP AMC\ARCHDocuments\SCF CDCB - MEP_ERP.rvt

12/21/2018 1:33:54 PM

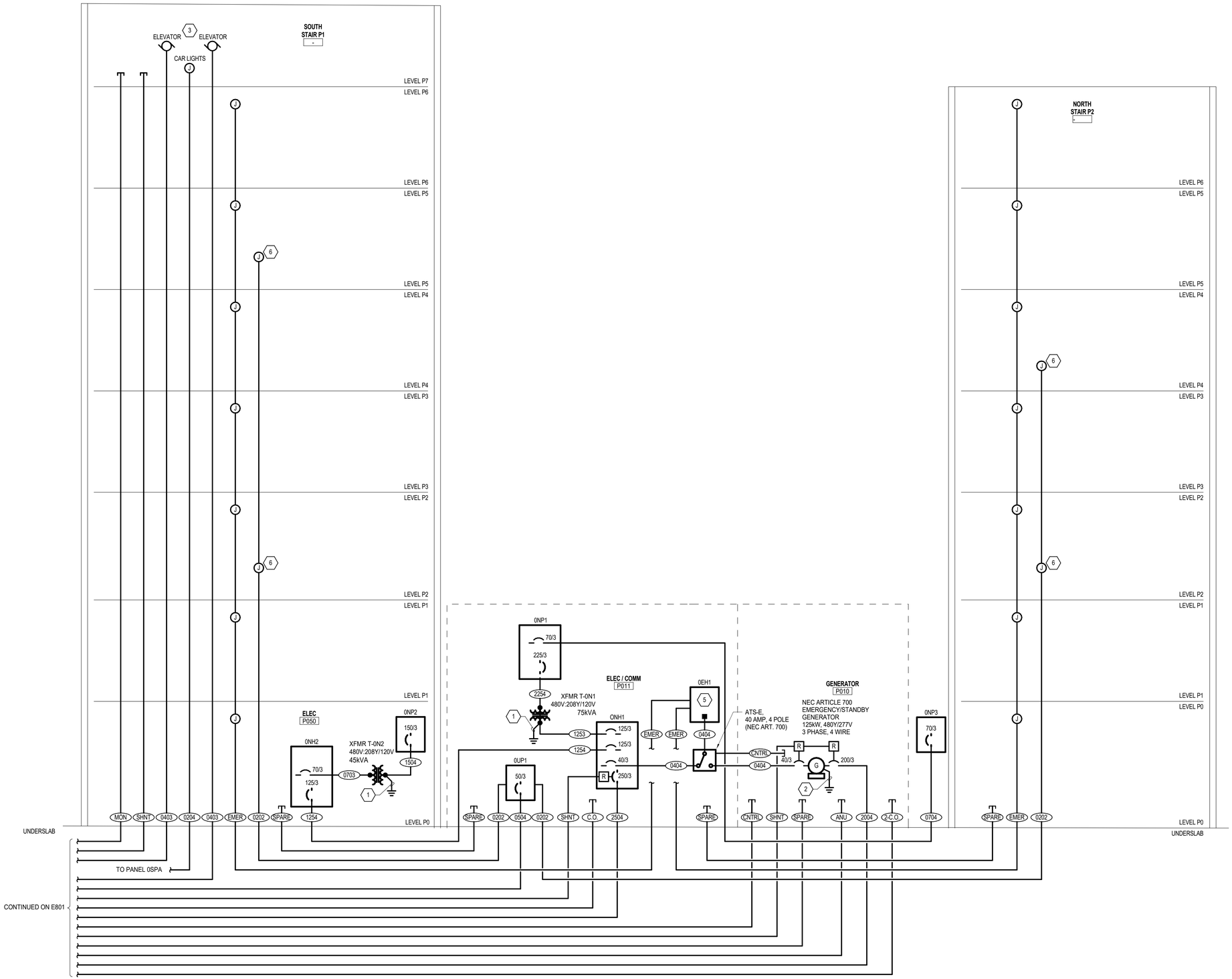

1 EP801 POWER ONE-LINE DIAGRAM - PARKING STRUCTURE

SCALE: NONE

GENERAL NOTES

1. REFER TO PANEL SCHEDULES AND FLOOR PLANS FOR CIRCUIT NUMBERS.
2. REFER TO FLOOR PLANS FOR CIRCUIT PANEL LOCATIONS AND CIRCUIT NUMBERS.

SHEET NOTES (#)

1. PROVIDE SEPARATELY DERIVED SYSTEM GROUND FOR TRANSFORMER IN ACCORDANCE WITH NEC ARTICLE 250.
2. PROVIDE SEPARATELY DERIVED SYSTEM GROUND FOR GENERATOR IN ACCORDANCE WITH NEC ARTICLE 250.
3. DURING STAND-BY OPERATION, ONLY ONE ELEVATOR IN EACH ELEVATOR BANK SHALL BE OPERABLE AT A TIME, IN ORDER TO REDUCE THE REQUIRED GENERATOR LOAD.
4. UPSIZED FOR VOLTAGE DROP.
5. PROVIDE INTEGRAL SURGE PROTECTION DEVICE IN PANEL IAW NEC 700.8.
6. PROVIDE POWER CONNECTION TO CFCI DEDICATED CCTV NETWORK SWITCH, ENCLOSURE HEATER, AND ASSOCIATED EQUIPMENT.

FEEDER SCHEDULE

4	0202	1" C. 2-#10 + 1-#10 GROUND
4	0204	1" C., 4-#8 CU + 1-#8 CU GROUND
	0404	1" C., 4-#8 CU + 1-#10 CU GROUND
	0403	1" C., 3-#8 CU + 1-#10 CU GROUND
	0703	1-1/2" C., 3-#2 AL + 1-#4 AL GROUND
4	0704	1-1/2" C., 4-#1 AL + 1-#4 AL GROUND
	1253	1-1/2" C., 3-#2/0 AL + 1-#4 AL GROUND
	1254	2" C., 4-#2/0 AL + 1-#4 AL GROUND
	1504	2" C., 4-#3/0 AL + 1-#4 AL GROUND
	2004	2-1/2" C., 4-250 KCMIL AL + 1-#4 AL GROUND
	2254	3" C., 4-300 KCMIL AL + 1-#2 AL GROUND
	2504	3" C., 4-350 KCMIL AL + 1-#2 AL GROUND
	1-C.O.	3" CONDUIT ONLY
	2-C.O.	2-1/2" CONDUIT ONLY
	CNTRL	1" C., 8-#12 + 1-BELDEN 9729
	SHNT	1" C., 2-#12 CU + 1-#12 CU GROUND
	MON	1" C., 4-#12 CU (ATS POSITION MONITOR FOR ELEVATORS)
	SPARE	1" CONDUIT ONLY
	ANU	1" CONDUIT - REMOTE ANNUNCIATOR
	EMER	1" CONDUIT - EMERGENCY LIGHTING CIRCUITS

FEEDER SCHEDULE NOTES:
FEEDERS WITH PHASE CONDUCTOR SIZED #4 AND LARGER ARE SIZED FOR ALUMINUM CONDUCTORS UNLESS OTHERWISE NOTED. COPPER CONDUCTOR OF AN EQUIVALENT AMPACITY MAY BE USED, CONDUITS SHALL BE RE-SIZED ACCORDINGLY AND SHALL MAINTAIN NEC REQUIRED FILL RATIO.

BRANCH CIRCUIT PANEL NAMING CONVENTION

1NHA
- NUMBER DESIGNATES LEVEL PANEL IS LOCATED (0=BASEMENT, 1=LEVEL 1, 2=LEVEL 2)
- LETTER DESIGNATES DISTRIBUTION SYSTEM (N=NORMAL, S=STANDBY, E=EMERGENCY)
- LETTER DESIGNATES VOLTAGE (H=480Y/277V, P=208Y/120V)
- LETTER DESIGNATES PANEL NUMBER IN SEQUENCE

DISTRIBUTION PANEL NAMING CONVENTION

2NP-DP
- NUMBER DESIGNATES LEVEL PANEL IS LOCATED (0=BASEMENT, 1=LEVEL 1, 2=LEVEL 2)
- LETTER DESIGNATES DISTRIBUTION SYSTEM (N=NORMAL, S=STANDBY, E=EMERGENCY)
- LETTER DESIGNATES VOLTAGE (H=480Y/277V, P=208Y/120V)
- LETTERS DESIGNATES PANEL AS A DISTRIBUTION PANEL

THESE PROJECT RECORD DOCUMENTS HAVE BEEN MODIFIED TO INCLUDE FIELD MARKUPS PROVIDED BY THE CONTRACTOR. AMC ENGINEERS HAS NOT FIELD VERIFIED THIS INFORMATION AND DOES NOT CERTIFY THE COMPLETENESS AND/OR ACCURACY OF THESE DOCUMENTS.

BY: ASJ

© 15334

NEESE CONSTRUCTION, INC.
AMC ENGINEERS
Adams, Mongermann & Co., Inc.
DLA Job No. 2018-0149
701 E. Tudor Rd. Suite 230
Anchorage, AK 99503
www.amc-engineers.com

Childrens Dental Clinic Building

4441 Diplomacy Drive, Anchorage AK 99508

Southcentral Foundation

No.	Description	Date

Drawn By: ERP/MPL
Checked By: ASJ
Date: 24 DEC 2018
Phase: RECORD DRAWINGS
Job No: 21519.00
SHEET TITLE: PARTIAL POWER ONE-LINE DIAGRAM
SHEET NO: EP801

C:\Users\ERP.AMC-ANCH\Documents\DCF CDCB - MEP_ERP.rvt
12/21/2018 1:55:55 PM